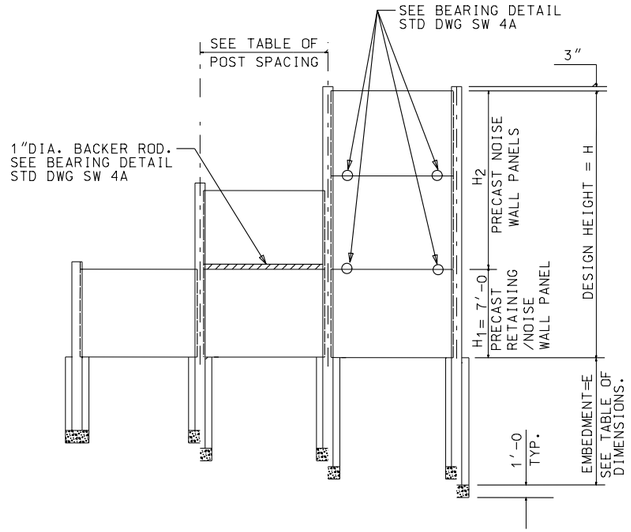

ELEVATION OF PRECAST RETAINING/NOISE WALL

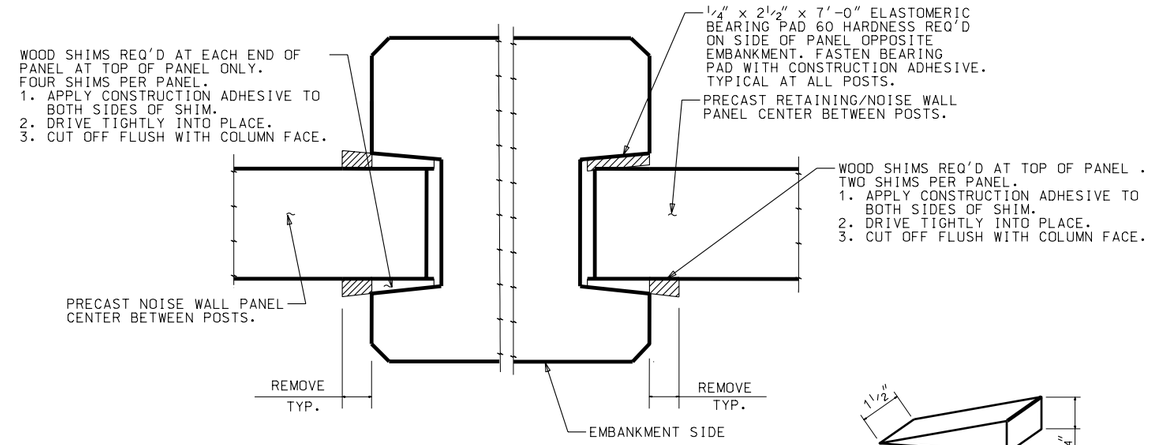

POST/PANEL DETAIL

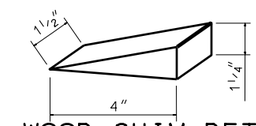

WOOD SHIM DETAIL

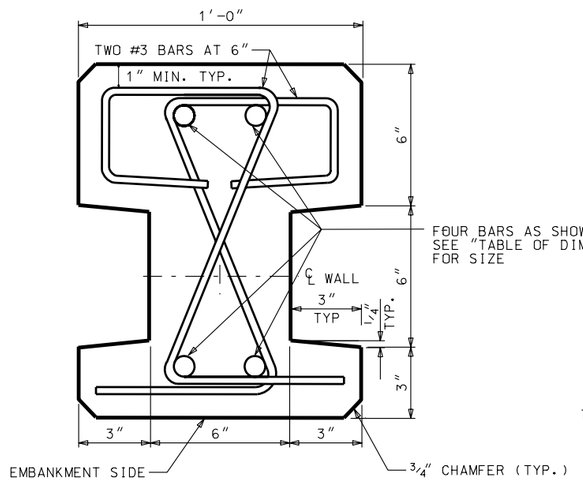

SECTION THRU TYPE I POST

θ=0° TO 10°

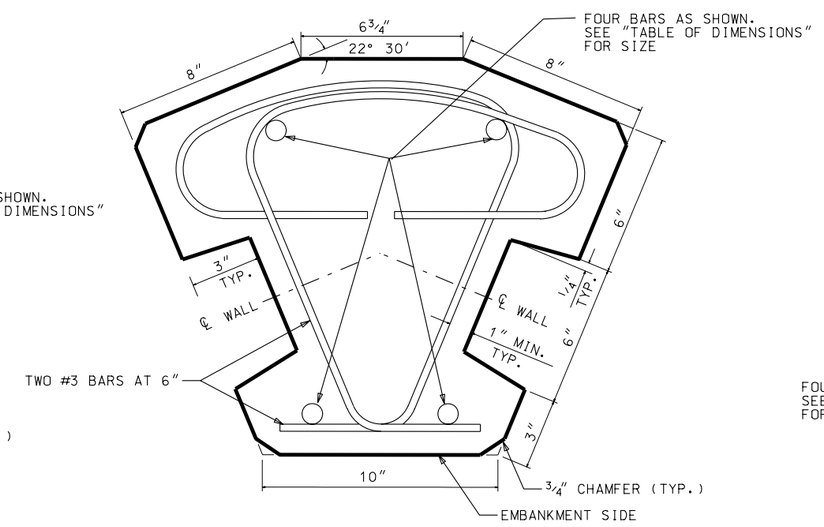

SECTION THRU TYPE II POST

θ=35° TO 55°

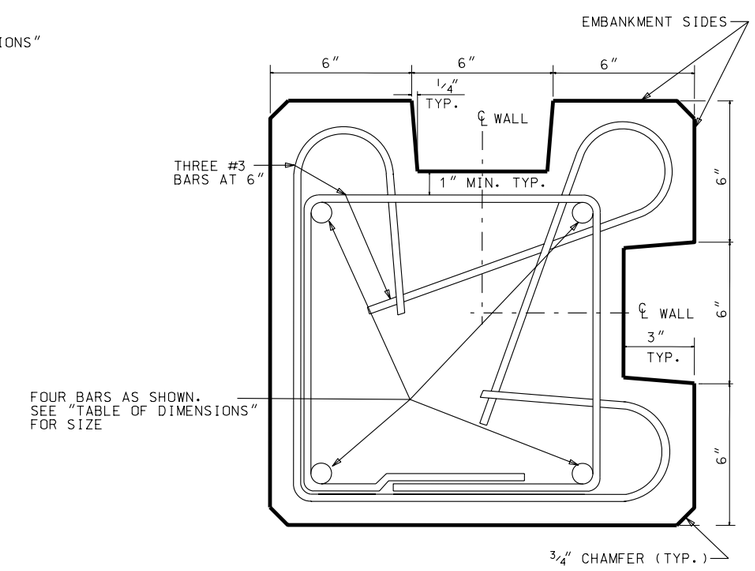

SECTION THRU TYPE III POST

θ=80° TO 100°

TABLE OF DIMENSIONS							
DESIGN H			PANEL HEIGHT			POST	
H_1	+ H_2	= H	TOP PANEL	CENTER PANEL	BOTTOM PANEL	VERTICAL BAR SIZE	EMBEDMENT "E"
7'		7'			7'	#7	4'-8
7'	3'	10'	3'		7'	#7	6'-8
7'	4'	11'	4'		7'	#7	7'-4
7'	5'	12'	5'		7'	#7	8'-0
7'	6'	13'	6'		7'	#7	8'-8
7'	7'	14'	3'	4'	7'	#8	9'-4
7'	8'	15'	4'	4'	7'	#8	10'-0
7'	9'	16'	4'	5'	7'	#8	10'-8
7'	10'	17'	5'	5'	7'	#9	11'-4
7'	11'	18'	5'	6'	7'	#9	12'-0
7'	12'	19'	6'	6'	7'	#9	12'-8

POST SPACING	
℄ POST TO ℄ POST	REQ'D SPACING
TYPE I TO TYPE I	12'-0
TYPE I TO TYPE II	12'-2
TYPE I TO TYPE III	12'-3
TYPE II TO TYPE II	12'-4
TYPE II TO TYPE III	12'-5

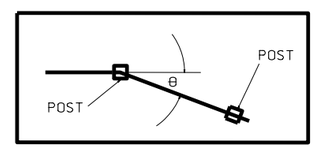

REVISIONS

NO.	DATE	APPR.	REMARKS
1	02/23/06	B.A.	CORRECTED PAD HARDNESS IN POST/PANEL DETAIL.

UTAH DEPARTMENT OF TRANSPORTATION
STANDARD DRAWINGS FOR ROAD AND BRIDGE CONSTRUCTION
SALT LAKE CITY, UTAH

RECOMMENDED FOR APPROVAL — FEB.23,2006 DATE
CHAIRMAN STANDARDS COMMITTEE APPROVED — FEB.23,2006 DATE
DEPUTY DIRECTOR

PRECAST CONCRETE RETAINING/NOISE WALL 2 OF 2

STANDARD DRAWING TITLE

STD DWG
SW 4B