UDOT GOING THE EXTRA MILE

Utah Department of Transportation
Maintenance Facility

APPROVALS:

Prime Agency

DFCM

APPROVAL DOES NOT RELIEVE A/E OF DESIGN LIABILITY

DFCM PRE-BID STAFF REVIEW
Division of Facilities Construction and Management

Architectural (Staff)	Date	HVAC	Date
Arch. Specs.	Date	Plumbing	Date
Handicapped	Date	Energy	Date
Program	Date	Electrical	Date
Landscaping	Date	Structural	Date
	Date		Date
OTHER AGENCIES		Fire Marshall	Date
State Department of Health	Date	Agency	Date

APPROVAL DOES NOT RELIEVE A/E OF DESIGN LIABILITY

DFCM DESIGN AND CODE CRITERIA
(Fee A/E Attach and fill in applicable data for each drawing submittal)

Applicable Codes:	Year		Year
International Building Code	2000	International Mechanical Code	2001
Planning & Design Criteria To prevent		International Plumbing Code	2000
Architectural Barriers for the Aged and		ASHRAE 90.1	1999
the Physically Handicapped	ADA	National Electrical Code	1999

A. Occupancy and Group — S2
Change in Use: Yes___ No___ — Mixed Occupancy: Yes___ No___

B. Type of Construction (Circle): I A, I B, II A, II B, III A, III B, IV, V A, V B

C. Location on Property: F.R. Ext. Walls (Hrs.) 0 — Ext. Wall Opening(s) Protection (Hrs.) 0

	Each Occupancy		
D. Occupancy separation required (Hrs.)	0		
Sprinkled: Indicate Yes or No	NO		
Stories: 1 or multiple			
a. Actual Area (ft):	13,656		
b. Basic allowable area:	26,000		
c. Allowable Area Increase due to frontage.	75%		
	% Area (ft)	% Area (ft)	% Area (ft)
d. Accumulative subtotal (b+c):	45,500		
Sprinkler: area increase (x 3 single)	136,500		
(x 2 multi)			
e. Total allowable area for a single story:	182,000		
x 2 for multi-story buildings:			
f. Ratio = a/e (Actual divided by allowable)	0.075		

a. Fire-Resistive Requirements (Hrs.): (1 Hr., 2 Hr., 3 Hr., 4 Hr., H.T.)

Exterior Bearing Walls:	0	Floors - Ceiling Floor	0
Interior Bearing Walls:	0	Roofs - Ceiling Roofs	0
Exterior Non-bearing Walls:	0	Exterior Doors and Windows	0
Structural Frame:	0	Shaft Enclosures	0
Partitions - Permanent:	0		

Utah Department of Transportation
Maintenance Facility

ISSUE

Cover Sheet

G-001

GENERAL ABBREVIATIONS

ALT.	ALTERNATE
ALUM.	ALUMINUM
A.B.	ANCHOR BOLT
&	AND
ARCH.	ARCHITECTURAL
@	AT OR AT THE
BM.	BEAM
BLK.	BLOCK
BLKG.	BLOCKING
BD.	BOARD
BOT.	BOTTOM
BLDG.	BUILDING
CLKG.	CAULKING
C.I.	CAST IRON
CLG.	CEILING
CEM.	CEMENT
CTR.	CENTER
℄	CENTER LINE
CER.	CERAMIC
C.T.	CERAMIC TILE
CFCI	CONTRACTOR FURNISH, CONTRACTOR INSTALL
CFOI	CONTRACTOR FURNISH, OWNER INSTALLED
CLR.	CLEAR (...ANCE)
CLO.	CLOSET
COL.	COLUMN
CONC.	CONCRETE
CMU	CONCRETE MASONRY UNIT
CONN.	CONNECTION
CONSTR.	CONSTRUCTION
CONT.	CONTINUE/CONTINUOUS
CONTR.	CONTRACTOR
C.J.	CONTROL JOINT
CORR.	CORRIDOR
CNTR.	COUNTER
CTSK.	COUNTERSUNK
DET.	DETAIL
DIA.	DIAMETER
DIM.	DIMENSION
DN.	DOWN
D.S.	DOWNSPOUT
DWG.	DRAWING
D.F.	DRINKING FOUNTAIN
EA.	EACH
ELEC.	ELECTRIC (AL)
ELEV./EL.	ELEVATION
EQ.	EQUAL
EQUIP.	EQUIPMENT
EXP.	EXPANSION
EXT.	EXTERIOR
EW	EACH WAY

FIN.	FINISH
F.A.	FIRE ALARM
F.E.	FIRE EXTINGUISHER
F.E.C.	F.E. CABINET
FLR./FL.	FLOOR
F.D.	FLOOR DRAIN
FTG.	FOOTING
FDN.	FOUNDATION
FURN.	FURANCE
GALV.	GALVANIZED
G.I.	GALVANIZED IRON
GA.	GAUGE
GL.	GLASS
GR.	GRADE
GND.	GROUND
GYP.	GYPSUM
GYP. BD.	GYPSUM BOARD
GEN. NOTE	GENERAL NOTE
HDWR.	HARDWARE
HDWD.	HARDWOOD
HT.	HEIGHT
H.P.	HIGH POINT
HORIZ.	HORIZONTAL
H.B.	HOSE BIBB
HM	HOLLOW METAL
HR.	HOURS (FIRE RATING)
HTR.	HEAT TRACING
IN.	INCH
I.D.	INSIDE DIAMETER
INUSL.	INSULATION
INT.	INTERIOR
JAN.	JANITOR
JT.	JOINT
J-BOX	JUNCTION BOX
KIT.	KITCHEN
LAM.	LAMINATE
LAV.	LAVATORY
LT.	LIGHT
L.P.	LOW POINT
MAINT.	MAINTENANCE
MFR.	MANUFACTURER
M.O.	MASONRY OPENING
MAX.	MAXIMUM
MECH.	MECHANICAL
MEMB.	MEMBRANE
MEN	MEN'S TOILET
MTL./MET.	METAL
MIN.	MINIMUM
MIR.	MIRROR
M.C.J.	MASONARY CONTROL JOINT

MISC.	MISCELLANEOUS
MTD.	MOUNTED
MUL.	MULLION
NOM.	NOMINAL
N.	NORTH
N.I.C.	NOT IN CONTRACT
N.T.S.	NOT TO SCALE
NO. OR #	NUMBER
OFOI	OWNER FURNISH, OWNER INSTALL
OFCI	OWNER FURNISH, CONTRACTOR INSTALL
OFF.	OFFICE
O.C.	ON CENTER
OPNG.	OPENING
OPP.	OPPOSITE
OPP. H.	OPPOSITE HAND
O.D.	OUTSIDE DIAMETER
PTD.	PAINTED
PR.	PAIR
PART.	PARTITION
PED.	PEDESTRIAN
PLAS.	PLASTER
P. LAM.	PLASTIC LAMINATE
PL	PLATE
PM	PRESSED METAL
PLYWD.	PLYWOOD
PT.	POINT
Q.T.	QUARRY TILE
RAD.	RADIUS
R.W.L.	RAIN WATER LEADER
RE:	REFER TO
REFL.	REFLECTED
REINF.	REINFORCING
REQ.	REQUIRED
REV.	REVISED
R.	RISER
R.D.	ROOF DRAIN
RM.	ROOM
R.O.	ROUGH OPENING
RECD.	RECESSED
SCHED.	SCHEDULE
SEAL.	SEALANT
SECT.	SECTION
S.SK.	SERVICE SINK
SHT.	SHEET
SIM.	SIMILAR
SL./SLP.	SLOPE
S.C.	SOLID CORE
SPEC.	SPECIFICATIONS
SQ.	SQUARE
S.M.	SURFACE MOUNTED

STD.	STANDARD
STL.	STEEL
STOR.	STORAGE
STRUCT.	STRUCTURAL/STRUCTURE
SYM.	SYMMETRICAL
S.STL	STAINLESS STEEL
TEL.	TELEPHONE
TEMP.	TEMPORARY/TEMPERED
THK.	THICK (NESS)
T & G	TONGUE AND GROOVE
T/CONC.	TOP OF CONCRETE
T/CURB	TOP OF CURB
T.O.P.	TOP OF PLATE
T/WALL	TOP OF WALL
T.	TREAD
TYP.	TYPICAL
UNF.	UNFINISHED
U.N.O.	UNLESS NOTED OTHERWISE
VAR.	VARY OR VARIES
VERT.	VERTICAL
V.T.R.	VENT THROUGH ROOF
V.E.S.	VERTICAL EDGE SURFACE
W/	WITH
WD.	WOOD
WP.	WATERPROOF
WSCT.	WAINSCOT
W/O	WITHOUT
W.P.	WORKING POINT
W.R.	WATER RESISTANT
W.H.	WATER HEATER

DRAWING SYMBOLS

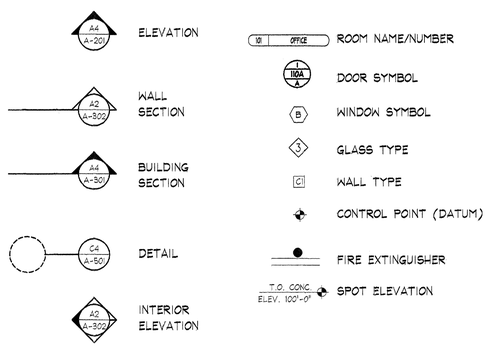

GRAPHIC SYMBOLS

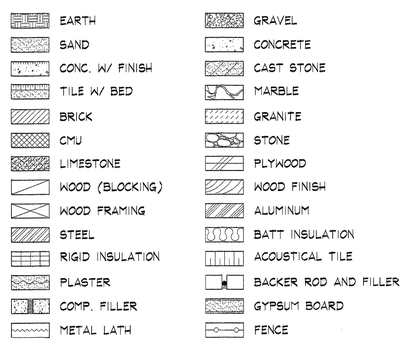

INDEX OF DRAWINGS

GENERAL

G-001	COVER SHEET
G-002	DRAWING INDEX, GENERAL INFO.
G-003	MASTER KEYNOTES
G-004	ARCHITECTURAL SITE PLAN

CIVIL

C-101	SITE PLAN AND UTILITY PLAN
C-501	SITE DETAILS
C-502	SITE DETAILS

STRUCTURAL

S-001	GENERAL STRUCTURAL NOTES
S-101	FOOTING AND SLAB PLAN
S-102	ROOF FRAMING PLAN
S-103	SALT STORAGE AND SANDER RACK PLAN
S-501	STRUCTURAL DETAILS
S-502	STRUCTURAL DETAILS
S-503	STRUCTURAL DETAILS
S-504	STRUCTURAL DETAILS

ARCHITECTURAL

A-101	FLOOR PLAN
A-102	ROOF PLAN
A-103	REFLECTED CEILING PLAN
A-201	EXTERIOR ELEVATIONS
A-202	INTERIOR ELEVATIONS
A-301	BUILDING SECTIONS
A-302	WALL SECTIONS
A-303	WALL SECTIONS
A-501	BUILDING DETAILS
A-502	BUILDING DETAILS
A-503	PARTITION/WINDOW DETAILS
A-504	MISCELLANEOUS DETAILS
A-601	SCHEDULES AND DETAILS
A-701	SALT STORAGE PLAN AND ELEVATIONS
A-702	SALT STORAGE AND SANDER RACK
A-703	WASH RACK AND DETAILS

MECHANICAL

M-001	MECHANICAL NOTES AND SCHEDULES
M-101	MECHANICAL FLOOR PLAN
M-201	MECHANICAL DETAILS
P-001	PLUMBING NOTES AND SCHEDULES
P-101	PLUMBING FLOOR PLAN
P-201	PLUMBING DETAILS

ELECTRICAL

E-001	SCHEDULES AND NOTES
E-101	ELECTRICAL SITE PLAN
E-201	LIGHTING PLAN
E-301	POWER PLAN
E-302	LIGHTNING PROTECTION PLAN
E-303	SALT STORAGE ELECTRICAL PLAN
E-401	ELECTRICAL DETAILS AND ONE LINE

GENERAL PROJECT NOTES

1. THE KEYNOTE SYSTEM UTILIZED IN THESE DOCUMENTS INCLUDES A REFERENCE TO THE 5-DIGIT SPECIFICATION SECTION IN WHICH THE ITEM IS SPECIFIED. SUCH REFERENCE IS FOR KEYNOTE CLARITY AND ORGANIZATION; AND IN NO WAY IS INTENDED TO RESTRICT OR CONTROL THE CONTRACTOR IN DIVIDING THE WORK AMONG SUBCONTRACTORS OR IN ESTABLISHING THE EXTENT OF WORK TO BE PERFORMED BY ANY TRADE. THE PROJECT MASTER KEYNOTE LEGEND IS APPLICABLE TO ALL DRAWINGS. SEE SHEET G002 REFER TO PROJECT MASTER KEYNOTE LEGEND FOR KEYNOTE DESCRIPTIONS UNINTENTIONALLY OMITTED FROM INDIVIDUAL DRAWING KEYNOTE LEGEND.
2. ALL DIMENSIONS ARE TO FACE OF MASONRY OR FACE OF STUD, U.N.O.
3. DO NOT SCALE DRAWINGS FOR DIMENSIONS.
4. DIMENSIONS NOTED AS N.T.S. ARE TO BE FIELD VERIFIED.
5. ALL WOOD IN CONTACT WITH OR WITHIN 8" OF SOILS IS TO BE FIELD TREATED FOR MOISTURE, RODENT AND INSECT PROTECTION.
6. REFER TO SHEET A-503 FOR PARTITION TYPES.
7. REFER TO SHEET A-601 FOR DOOR SCHEDULE.
8. REFER TO SHEET A-601 FOR FINISH SCHEDULE.
9. LANDSCAPING, PLANTING, TOP SOIL AND IRRIGATION SYSTEM N.I.C. PROVIDE WATER SUPPLY ROUGH-IN AND ELECTRICAL SUPPLY TO IRRIGATION CONTROLS. PROVIDE PVC SLEEVE UNDER PAVEMENTS AND WALKS.
10. FLOOR PLAN ELEVATIONS:
    ELEVATIONS NOTED ON CIVIL PLANS ARE EQUILELENT TO THE FOLLOWING AS NOTED ON ARCHITECTURAL, STRUCTURAL, PLUMBING, MECHANICAL, AND ELECTRICAL DRAWINGS
    MAINTENANCE BUILDING=100'-0"=1000.00
    SALT STORAGE=100'-0"=1000.00

Utah Department of Transportation
Maintenance Facility

ISSUE

Drawing Index, General Info

G-002

KEY NOTES MASTER LIST

DIVISION 2 SITEWORK

02200 EARTHWORK

02200.A0*COMPACTED FILL
02200.B0*GRAVEL BASE

02511 ASPHALTIC CONCRETE PAVING (ZERO VOIDSMIX)

02511.A0*ZERO VOIDS ASPHALTIC PAVING

02520 PAVING

02520.A0*CONCRETE PAVING
02520.C0*CONCRETE CURB

02720 DRAINAGE

02720. A0* CATCH BASIN ,PRECAST
02720.M0*FLOOR DRAIN - RE: MECHANICAL/PLUMBING

02831 CHAIN LINK FENCE & GATES

02831.F1*CHAIN LINK FENCE
02831.G1*SLIDING GATE

DIVISION 3 CONCRETE

03300 CAST-IN-PLACE CONCRETE

03300.A1*CONCRETE SLAB-ON-GRADE - RE: STRUCTURAL
03300.B1*FOUNDATION - RE:STRUCTURAL
03300.C1*FOOTING - RE: STRUCTURAL
03300.F0*CAST-IN-PLACE REINFORCED CONCRETE
03300.F1*CAST-IN-PLACE REINFORCED CONCRETE, ARCHITECTURAL FINISH
03300.P5*CHAMFER JOINT
03300.S1*SPLASH BLOCK

DIVISION 4 MASONRY

04200 UNIT MASONRY

04200.A2*CMU (SIZE)
04200.B0*GROUT SOLID
04200.D1*CMU LINTEL - RE: STRUCTURAL
04200.Q0*BLOCK INSULATION
04200.R0*MASONARY CONTROL JOINT
04200.S0*MASONARY CONTROL JOINT FROM DOOR HEAD TO TOP OF WALL

DIVISION 5 METALS

05120 STRUCTURAL STEEL

05120.A1*STEEL BEAM - RE: STRUCTURAL - PAINTED
05120.B1*COLUMN - RE: STRUCTURAL - PAINTED

05220 STEEL JOISTS AND JOIST GIRDERS

05220.A1*STEEL JOISTS - RE: STRUCTURAL

05310 STEEL DECK

05310.A1*METAL DECK - RE: STRUCTURAL

05500 METAL FABRICATIONS

05500.A2*L (SIZE)
05500.E2*PLATE (SIZE) - GALVANIZED
05500.J1*PIPE BOLLARD (DIAMETER) - GALV. & PAINTED
05500.P1*ANCHOR BOLTS (DIAMETER, SPACING)
05500.X1*STEEL STUD (RE:STRUCTURAL)
05500.X2*STEEL RUNNER (RE:STRUCTURAL)

05510 METAL STAIRS

05510.B1*STRINGER (SIZE)
05510.C0*METAL GRATE TREAD, GALVANIZED
05510.C1*METAL GRATE PANEL, GALVANIZED
05510.A2*PIPE HANDRAIL (DIAMETER) - GALVANIZED AND PAINTED

05530 GRATINGS

05530.A1*STEEL GRATE 22-W-4 (SIZE) GALVANIZED

DIVISION 6 WOOD AND PLASTICS

06105 MISCELLANEOUS CARPENTRY

06105.L2*BLOCKING AS REQUIRED
06105.P1*2X4
06105.P6*4X4
06105.Q2*SHIM AS REQUIRED
06105.R2*SHEATHING - PLYWOOD (THICKNESS) GRADE (SIZE)
06105.V6*PEGBOARD (THICKNESS)

06402 INTERIOR ARCHITECTURAL WOODWORK

06402.H1*ADJUSTABALE SHELVES
06402.H2*SHELVING (DEPTH)
06402.K3*BASE UNIT W/DRAWERS (FINISH)
06402.K4*BASE UNIT W/DRAWER & ADJ. SHELF(VES) (FINISH)
06402.P2*COUNTERTOP - P. LAM. ON 3/4" PLYWOOD
06402.X0*WORKBENCH

DIVISION 7 THERMAL AND MOISTURE PROTECTION

07210 BUILDING INSULATION

07210.A1*BATT INSULATION (R-VALUE)
07210.B1*RIGID INSULATION (THICKNESS)
07210.D0*VAPOR BARRIER
07210.E0*FOUNDATION WALL INSULATION (THICKNESS)

07410 MANUFACTURED ROOF AND WALL PANELS

07410.A0*STANDING SEAM METAL ROOF
07410.A1*GUTTER
07410.A2*DOWNSPOUT
07410.G0*FLASHING, FINISH TO MATCH ROOF PANELS
07410.K0*SEALANT
07410.L0*METAL FACIA
07410.M1*METAL SOFFIT
07410.M2*ICE & WATER SHEILD
07410.M3*ROOF FELT
07410.P1*PANEL TRIM
07410.P2*RAKE TRIM
07410.P3*CORNER TRIM
07410.Q1*CLIP
07410.R1*METAL EAVE CLOSURE
07410.S0* SNOW GUARD

07901 JOINT SEALANTS

07901.A0*SEALANT
07901.G0*BACKER ROD

07905 PAVING JOINT SEALANTS

07905.A0*SEALANT (SEE 7901.A0*SEALANT)

DIVISION 8 DOORS AND WINDOWS

08111 STANDARD STEEL DOORS AND FRAMES

08111.A1*GROUT-FILLED PRESSED METAL FRAME
08111.B0*HOLLOW METAL DOOR
08111.C0*JAMB ANCHOR

08331 OVERHEAD COILING DOOR

08331.A0*OVERHEAD COILING DOOR

08360 SECTIONAL OVERHEAD DOORS

08360.A0*OVERHEAD SECTIONAL DOOR
08360.B0*DOOR TRACK
08360.C0*WEATHERSTRIPPING

08520 ALUMINUM WINDOWS

08520.A0*WINDOW UNIT
08520.B0*FIXED WINDOW
08520.M0*SILL STARTER, SET IN SEALANT
08520.P0*BREAKMETAL
08520.Q0*WEATHERSTRIPPING
08520.R0*ALUMINUM FLASHING, FINISH TO MATCH WINDOW FRAME

08800 GLAZING

08800.C0*WIRE GLASS
08800.G1*CLEAR INSULATING GLASS (SIZE)
08800.G2*1/4" CLEAR TEMPERED GLASS
08800.G3*TRANSLUCENT INSULATING GLASS

08950 TRANSLUCENT WALL AND SKYLIGHT SYSTEMS

08950.A0*TRANSLUCENT WALL AND SKYLIGHT SYSTEMS

DIVISION 9 FINISHES

09255 GYPSUM BOARD ASSEMBLIES

09255.A1*GYPSUM BOARD (THICKNESS)
09255.B2*TYPE 'X' GYPSUM BOARD (THICKNESS)
09255.C3*CEMENT BOARD (THICKNESS)
09255.H0*METAL STUD
09255.H1*METAL STUDS (SIZE, SPACING)
09255.M2*METAL CORNER BEAD (TYP)
09255.V2*LC-BEAD (PREFERRED USG 200-A TRIM)

09300 TILE

09300.A1*TILE UNGLAZED CERAMIC MOSAIC-TILE TYPE#1
09300.A2*TILE GLAZED WALL-TILE TYPE#2
09300.C0*TILE BASE
09300.D1*BULLNOSE TRIM UNIT
09300.G1*MORTAR BED
09300.G4*WATERPROOF MEMBRANE

09800 SPECIAL COATING

09800.A1*POLYAMIDE-EPOXY COATING

DIVISION 10 SPECIALTIES

10100 VISUAL DISPLAY BOARDS

10100.C0*MARKER BOARD (L X H)

10500 METAL LOCKERS

10500.A0*METAL LOCKERS
10500.B0*METAL STORAGE CABINETS

10522 FIRE EXTINGUISHERS, CABINETS, AND ACCESSORIES

10522.A0*FIRE EXTINGUISHER

10800 TOILET AND BATH ACCESSORIES

10800.B0*PAPER TOWEL DISPENSER & WASTE RECEPTACLE
10800.C0*TOILET TISSUE DISPENSER
10800.D0*MOP RACK
10800.E0*GRAB BAR
10800.H0*SOAP DISPENSER
10800.R1*FRAMED MIRROR (SIZE)
10800.T0*SHELF (SIZE)

DIVISION 11 EQUIPMENT

11146 LUBRICATION EQUIPMENT

11146.A2*AIR COMPRESSOR
11146.A3*OVERHEAD REEL SERVICES
11146.A4*WASTE OIL PUMP

DIVISION 12 FURNISHINGS

12511 HOURIZONTAL LOUVER BLINDS

12511.A0*HORIZONTAL LOUVER BLINDS

DIVISION 13 SPECIAL CONSTRUCTION

13123 METAL ARCH BUILDING SYSTEM

13123.A0*METAL ARCH BUILDING SYSTEM

DIVISION 14 CONVEYING SYSTEMS

14620 TROLLEY HOIST

14620.A0*TROLLEY HOIST (SIZE) - RE: STRUCTURAL

DIVISION 15 EQUIPMENT

15000 MECHANICAL

15420.D1*HEAVY DUTY TRENCH DRAIN
15450.A1*UTILITY SINK
15450.A2*DRAIN W/ SEDIMENT BUCKET
15450.A3*EMERGENCY SHWR & EYE WASH
15452.A1*DRINKING FOUNTAIN
15459.01*GAS FIRED WATER HEATER
15550.A1*GAS FIRED FURNACE
15576.A1*PENETRATIONS, SEE MECH.
15887.A2*LOUVER W/ BIRD SCREEN

DIVISION 16 ELECTRICAL

16510 INTERIOR AND EXTERIOR BUILDING LIGHTING

16510.01*EXTERIOR LIGHTS
16510.02*EXTERIOR LIGHTS IN CANOPY
16510.03*INTERIOR LIGHTS - FLOURESCENT

Utah Department of Transportation
Maintenance Facility

ISSUE

Master Keynotes

G-003

KEYNOTES

02511.A0KZERO VOIDS ASPHALTIC PAVING
02520.A0KCONCRETE PAVING
02520.C0KCONCRETE CURB AND GUTTER
02831.G1KSLIDING GATE

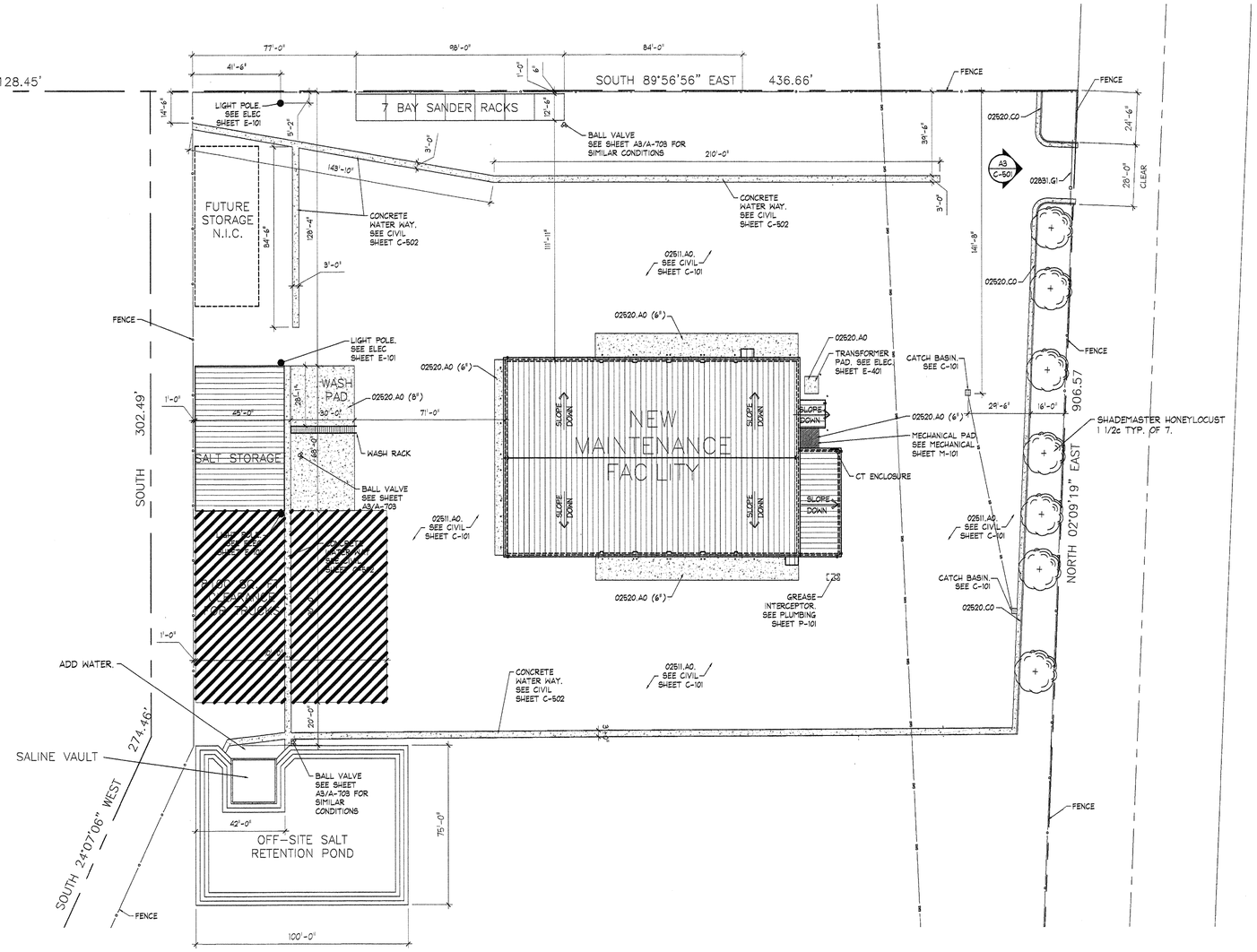

SITE PLAN

SCALE: 1" = 30'-0"

NORTH

Utah Department of Transportation
Maintenance Facility

ISSUE

Architectural Site Plan

G-004

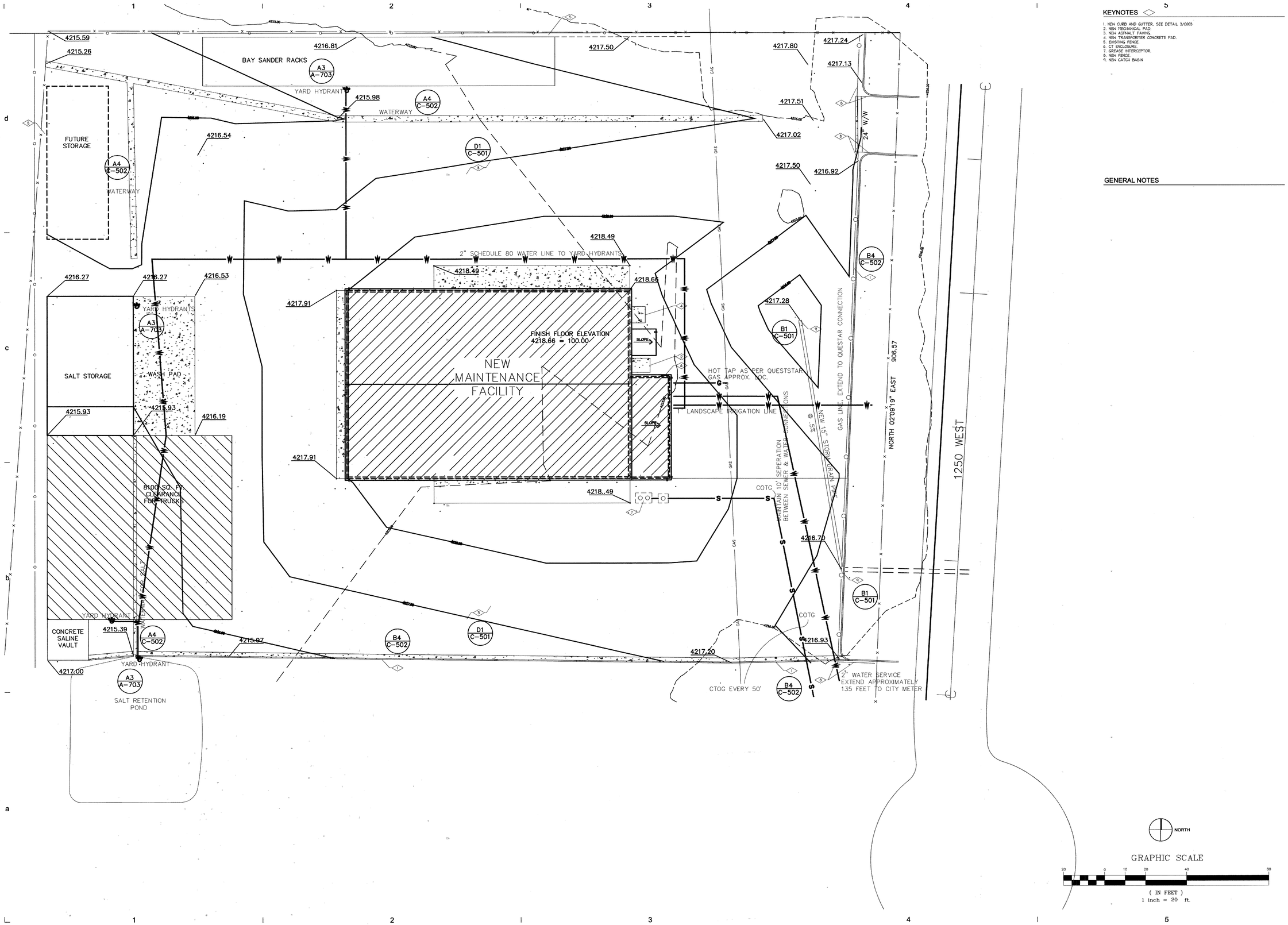

KEYNOTES

1. NEW CURB AND GUTTER, SEE DETAIL 3/C003
2. NEW MECHANICAL PAD.
3. NEW ASPHALT PAVING.
4. NEW TRANSFORMER CONCRETE PAD.
5. EXISTING FENCE.
6. CT ENCLOSURE.
7. GREASE INTERCEPTOR.
8. NEW FENCE.
9. NEW CATCH BASIN

GENERAL NOTES

Utah Department of Transportation
Maintenance Facility

ISSUE

SITE PLAN & UTILITY PLAN

C-101

PAVEMENT NOTES:

1. THE CONTRACTOR SHALL PERFORM PAVEMENT INSTALLATION DURING DRY SUMMER WEATHER UNLESS AUTHORIZED TO DO OTHERWISE.
2. SUBGRADE SHALL BE SCARIFIED TO A DEPTH OF 12" AND COMPACTED TO 95 PERCENT MODIFIED PROCTOR DENSITY.
3. ASPHALT CONCRETE MIX SHALL BE PROVIDED IN ACCORDANCE WITH SPECIFICATION SECTION 02520.

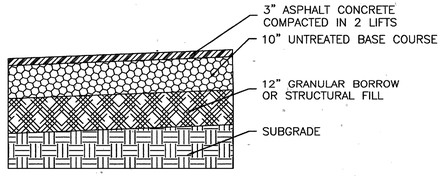

D1 ASPHALT PAVEMENT DETAIL

NO SCALE

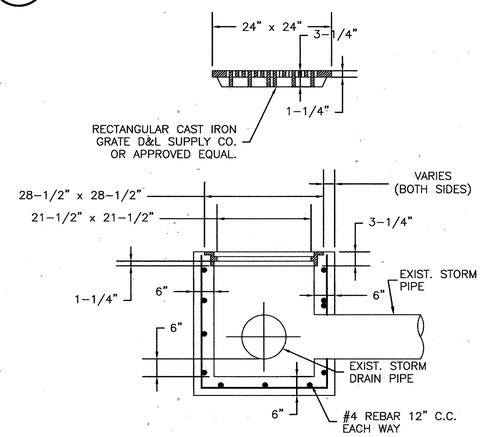

B1 STORM DRAIN CLEANOUT BOX SECTION

NO SCALE

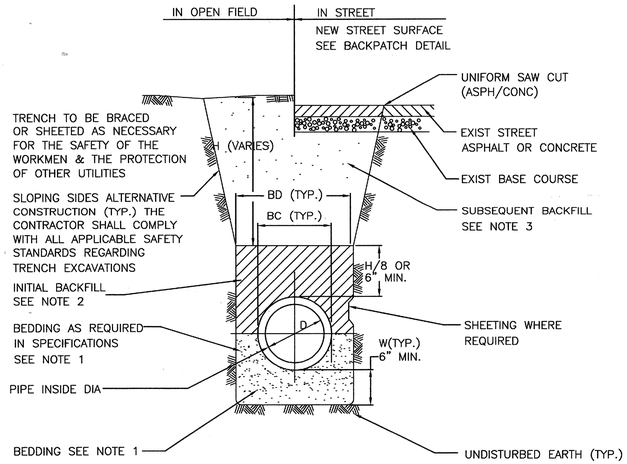

C2 PIPE TRENCHING DETAIL

NO SCALE

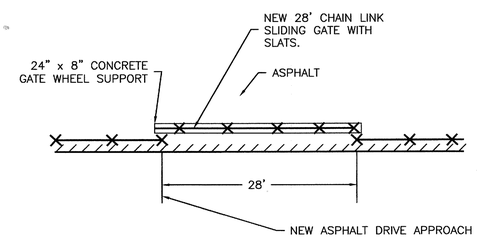

B2 FENCE & GATE PLAN

NO SCALE

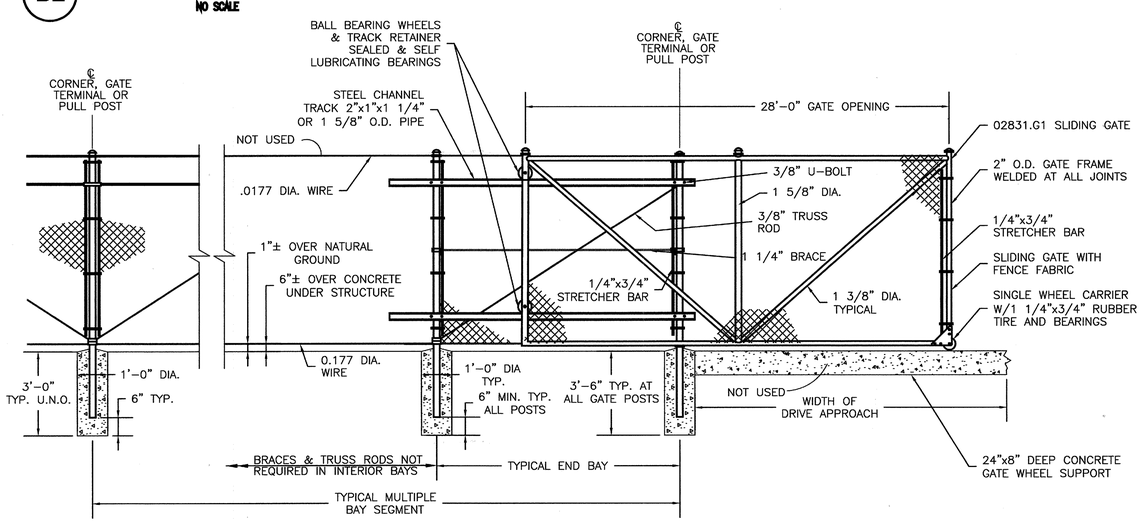

A3 FENCE & GATE SECTION

NO SCALE

BEDDING NOTES

1. BEDDING: (SEE SEC. 02200 FOR BEDDING MATERIAL GRADATION)
   CONTRACTOR MAY USE MIN. 3 SACK CONCRETE SLURRY AS AN ALTERNATIVE.
2. INITIAL BACKFILL, SEE SEC. 02200
3. SUBSEQUENT BACKFILL, SEC. 02200
4. CONCRETE SLURRY IS 1000 PSI. 3 BAG MIX
5. BEDDING SHALL BE BLOCKED OUT OR EXCAVATED AT BELLS.
6. TYPICAL TRENCH LIMITATIONS
   Bd=WIDTH FROM BOTTOM TO 6" ABOVE PIPE
   W =CLEARANCE TO WALL, EXCLUDING SHEETING, I.E. TO EARTH
   D =PIPE INSIDE DIAMETER, I.E. NOMINAL PIPE SIZE
   Bc=PIPE OUTSIDE DIAMETER.

D IN.	W MIN. IN.	Bd MAX.
0-6	6	Bc+24
8-24	8	Bc+24
27-60	12	Bc+36
OVER 60	18	Bc+42

7. WATER PIPE SHALL BE PLACED AT A DEPTH WHICH WILL PROVIDE 42" OF COVER OVER THE PIPE.
8. TRENCHES SHALL BE THOROUGHLY CONSOLIDATED BY MECHANICAL COMPACTION EQUIPMENT.
9. BEFORE BEING PLACED IN SERVICE, THE ENTIRE WATER LINE SHALL BE THOROUGHLY FLUSHED AND DISINFECTED.
10. ALL PIPE SHALL BE BEDDED AS SHOWN.
11. THE WATER PIPE LINE SHALL BE TESTED IN SECTIONS BETWEEN GATE VALVES, A MAXIMUM OF NOT MORE THAN A 1000 FEET TO BE TESTED AT ONE TIME. THE PRESSURE THAT THE LINE SHALL BE SUBJECT TO IS 200 POUNDS HELD FOR TWO HOURS TO DETECT ANY LEAKS IN THE PIPE LINE.
12. WATER LINES SHALL BE INSPECTED AND APPROVED BEFORE COVERING.
13. LINE SHALL BE BLOCKED PROPERLY AT BENDS, FIRE HYDRANT, DEAD ENDS, ETC.. REFER TO THRUST BLOCK DETAIL.
14. COORDINATE ALL CONNECTIONS TO THE EXISTING UTILITIES WITH THE APPROPRIATE UTILITY COMPANY AND OWNER.

Utah Department of Transportation
Maintenance Facility

ISSUE

SITE DETAILS

C-501

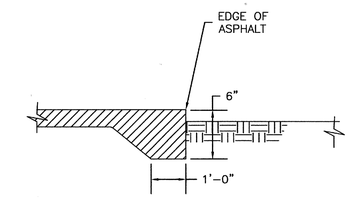

D4 PAVEMENT EDGE WITHOUT FENCE POST

NO SCALE

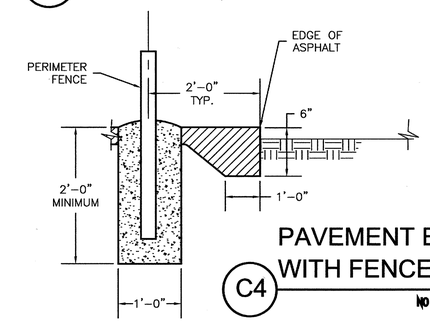

C4 PAVEMENT EDGE WITH FENCE POST

NO SCALE

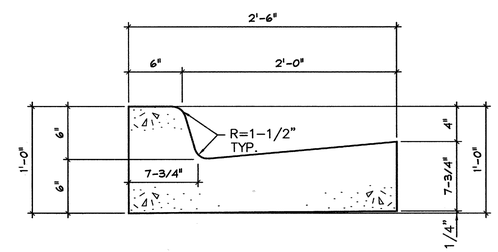

B4 CONCRETE CURB & GUTTER

NO SCALE

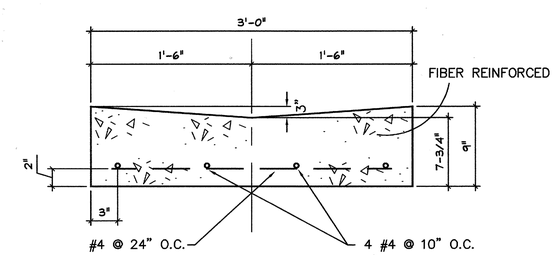

A4 CONCRETE WATERWAY

NO SCALE

Utah Department of Transportation
Maintenance Facility

ISSUE

SITE DETAILS

C-502

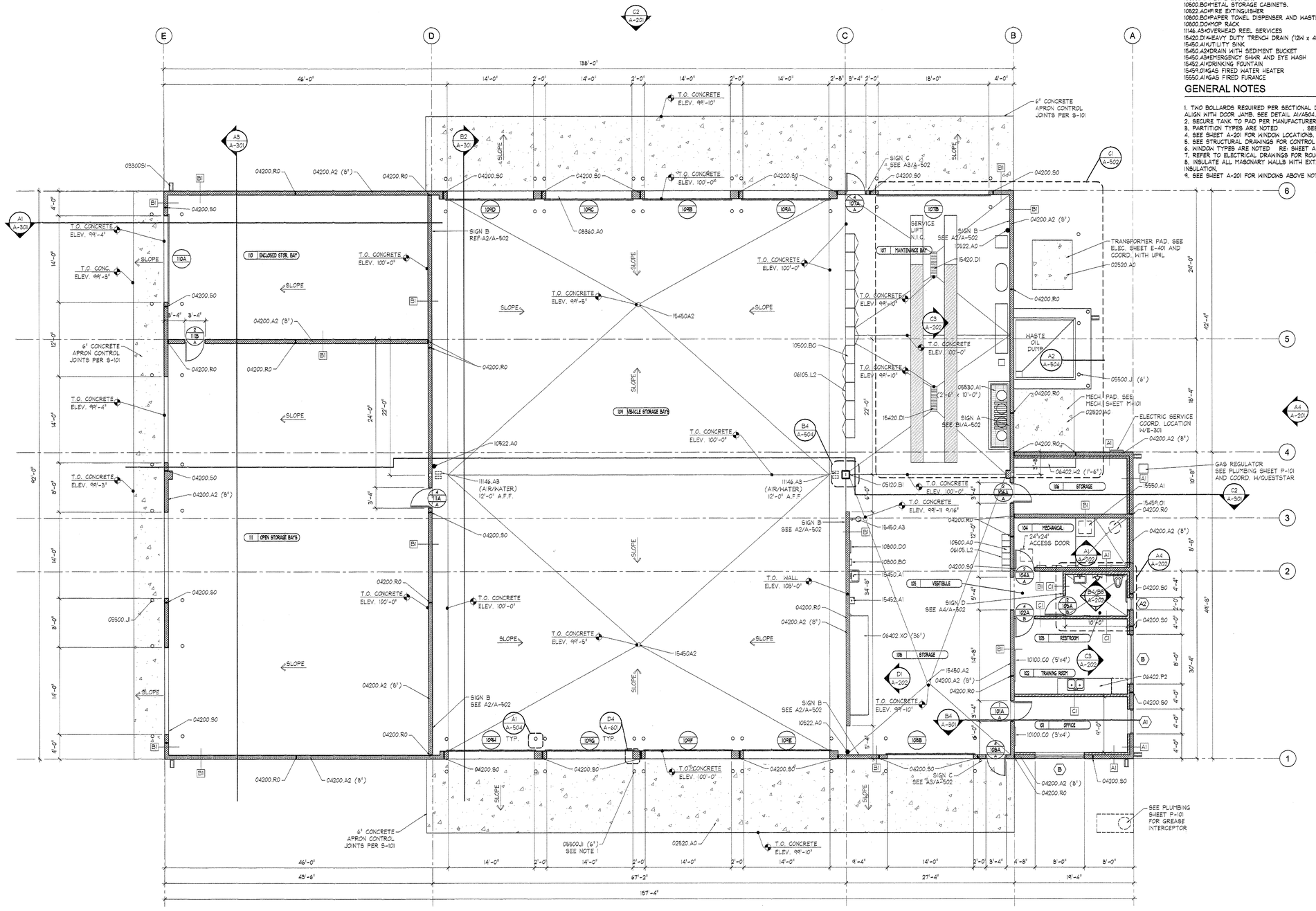

FLOOR PLAN

SCALE: 1/8" = 1'-0"

NORTH

KEYNOTES

02920.A0#CONCRETE PAVING
03300.S1#SPLASH BLOCK
04200.A2#CMU (SIZE)
04200.R0#MASONRY CONTROL JOINT
04200.S0#MASONRY CONTROL JOINT FROM DOOR HEAD TO TOP OF WALL
05120.B1.#COLUMN-RE: STRUCTURAL-PAINTED
05500.J1#PIPE BOLLARD (DIAMETER) GALV. AND PAINTED
05530.A1#STEEL GRATE 22-W-4 (SIZE) GALV.
06105.L2#BLOCKING AS REQUIRED
06402.H2#SHELVING (DEPTH)
06402.P2#COUNTERTOP-P. LAM. ON 3/4" PLYWOOD
06402.X0#WORK BENCH (DEPTH)
08360.A0#OVERHEAD SECTIONAL DOOR
10100.C0#MARKER BOARD (L X H)
10500.A0#METAL LOCKERS
10500.B0#METAL STORAGE CABINETS.
10622.A0#FIRE EXTINGUISHER
10800.B0#PAPER TOWEL DISPENSER AND WASTE RECEPTACLE
10800.D0#MOP RACK
11146.A3#OVERHEAD REEL SERVICES
15420.D1#HEAVY DUTY TRENCH DRAIN (12W x 48L)
15450.A1#UTILITY SINK
15450.A2#DRAIN WITH SEDIMENT BUCKET
15450.A3#EMERGENCY SHWR AND EYE WASH
15452.A1#DRINKING FOUNTAIN
15459.01#GAS FIRED WATER HEATER
15550.A1#GAS FIRED FURANCE

GENERAL NOTES

1. TWO BOLLARDS REQUIRED PER SECTIONAL DOOR JAMB ON BOTH INTERIOR AND EXTERIOR FACES. ALIGN WITH DOOR JAMB. SEE DETAIL A1/A504.
2. SECURE TANK TO PAD PER MANUFACTURERS RECOMMENDATIONS.
3. PARTITION TYPES ARE NOTED . SEE SHEET A-503.
4. SEE SHEET A-201 FOR WINDOW LOCATIONS. SEE SHEET A-503 FOR WINDOW TYPES.
5. SEE STRUCTURAL DRAWINGS FOR CONTROL JOINT LOCATIONS IN CONCRETE SLAB.
6. WINDOW TYPES ARE NOTED RE: SHEET A-503.
7. REFER TO ELECTRICAL DRAWINGS FOR ROUGH-IN REQUIREMENTS.
8. INSULATE ALL MASONRY WALLS WITH EXTERIOR EXPOSURE PER SECTION 04200, INSULATION.
9. SEE SHEET A-201 FOR WINDOWS ABOVE NOT SHOWN.

Utah Department of Transportation
Maintenance Facility

ISSUE

Floor Plan

A-101

KEYNOTES

04200.A2 CMU (SIZE)
07410.A0 STANDING SEAM METAL ROOF
07410.A1 GUTTER
07410.B0 SNOW GUARD
15576.A1 PENETRATIONS. SEE MECH.

GENERAL NOTES

SEE SHEET A-201 FOR DOWNSPOUTS

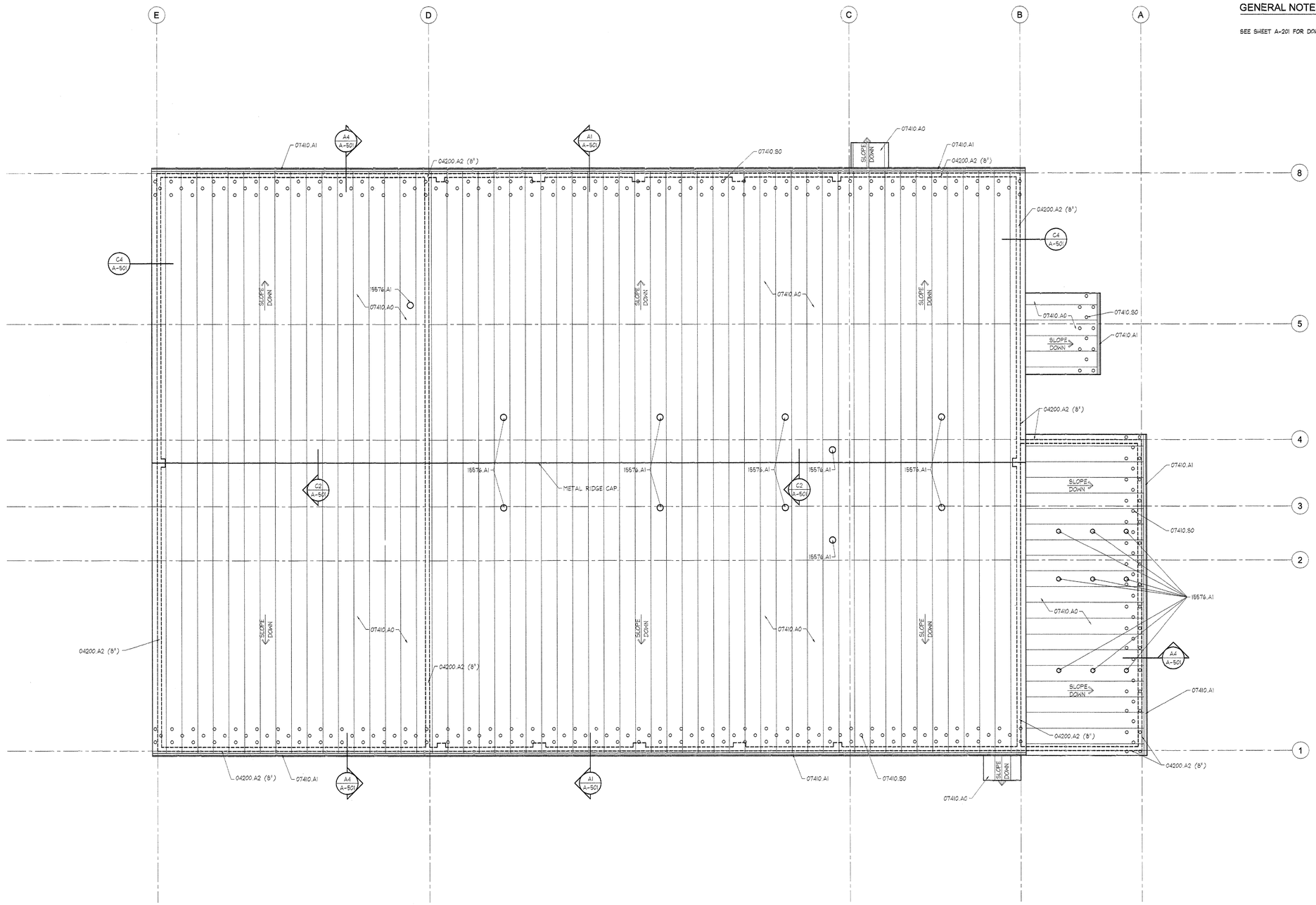

ROOF PLAN

SCALE: 1/8" = 1'-0"

NORTH

Utah Department of Transportation
Maintenance Facility

ISSUE

Roof Plan

A-102

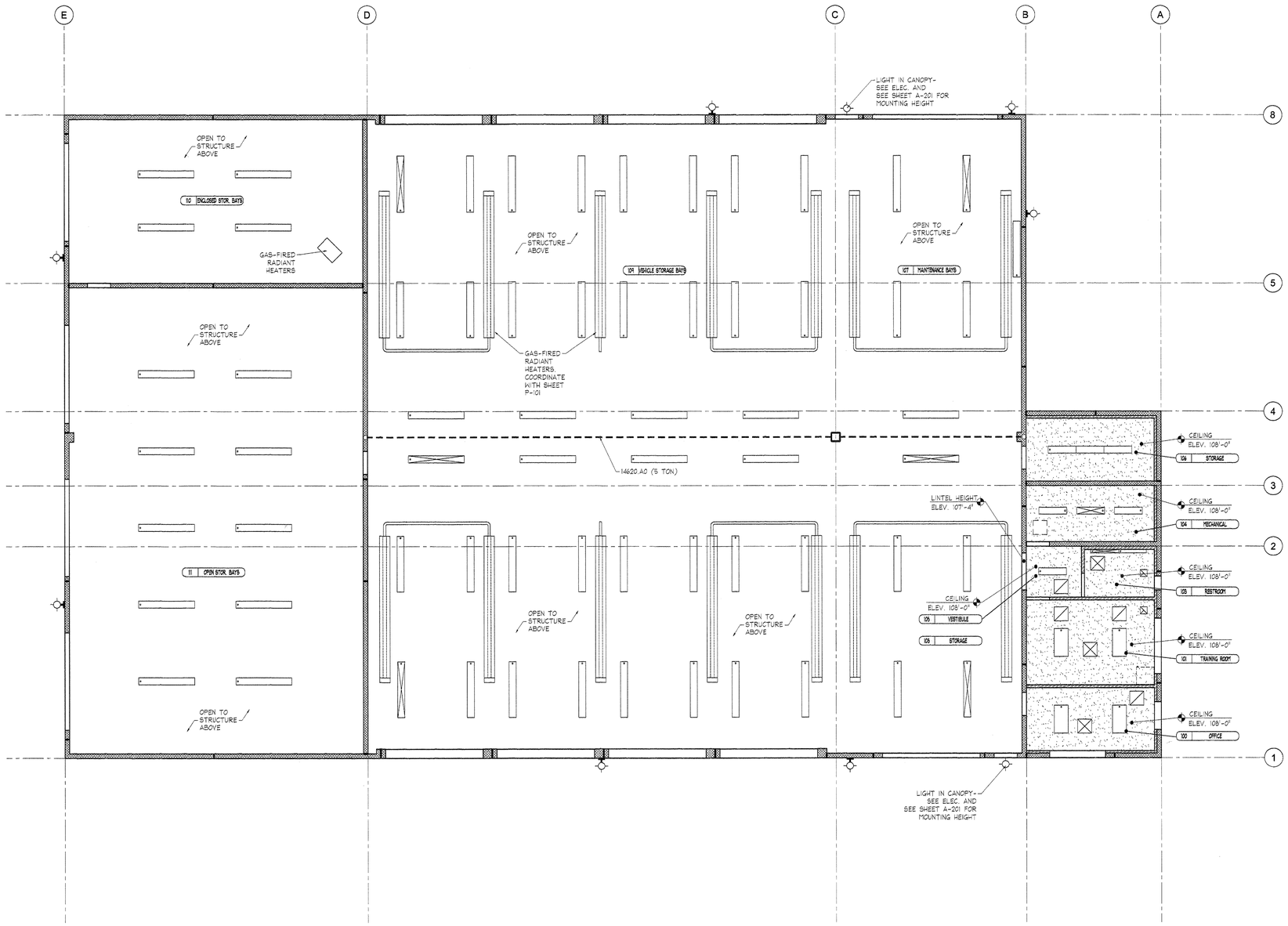

REFLECTED CEILING PLAN

SCALE: 1/8" = 1'-0"

NORTH

KEYNOTES

14620.AO*TROLLEY HOIST (SIZE) RE: STRUCT.

ROOM SYMBOL KEY

ROOM NO. — 114 | OFFICE — ROOM NAME

REFLECTED CEILING LEGEND

- SUSPENDED GYPSUM BOARD CEILING.
- CEILING ELEV. 108'-0" — CEILING HEIGHT FROM FINISHED FLOOR
- FLUORESCENT LIGHT FIXTURE
- WALL MOUNTED LIGHT FIXTURE
- SURFACE MOUNTED LIGHT FIXTURE
- WALL MOUNTED LIGHT FIXTURE
- SUPPLY AIR DIFFUSER
- RETURN AIR GRILL
- EXHAUST FAN

NOTE: SEE MECHANICAL AND ELECTRICAL DRAWINGS AND COORDINATE LOCATION OF DIFFUSERS, LIGHT FIXTURES, ETC. SOME OF THE ITEMS INDICATED ON MECHANICAL AND ELECTRICAL DRAWINGS MAY OR MAY NOT BE INDICATED ON THIS ARCHITECTURAL REFLECTED CEILING PLANS.

Utah Department of Transportation
Maintenance Facility

ISSUE

Reflected Ceiling Plan

A-103

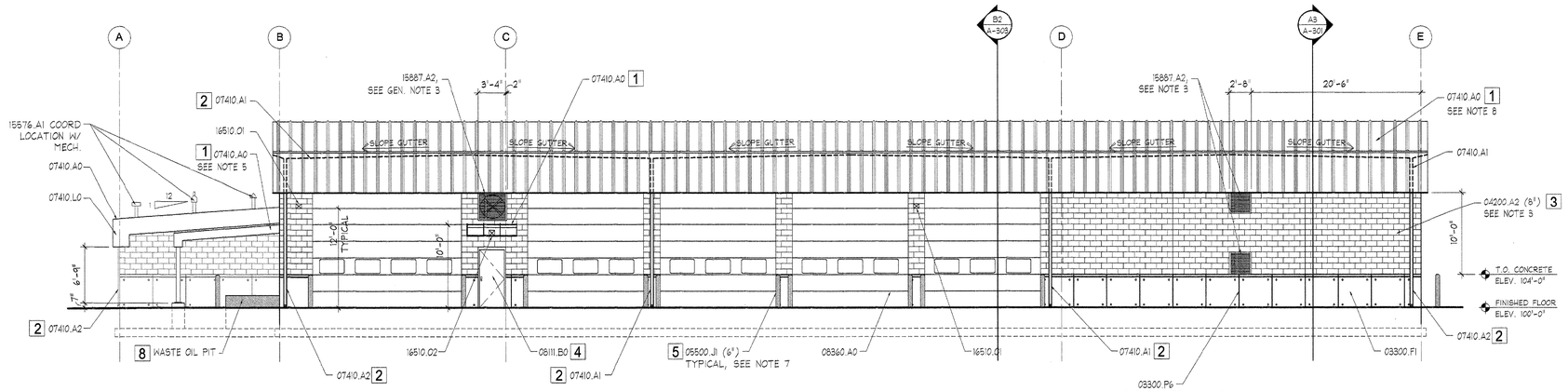

C2 NORTH ELEVATION

SCALE: 1/8" = 1'-0"

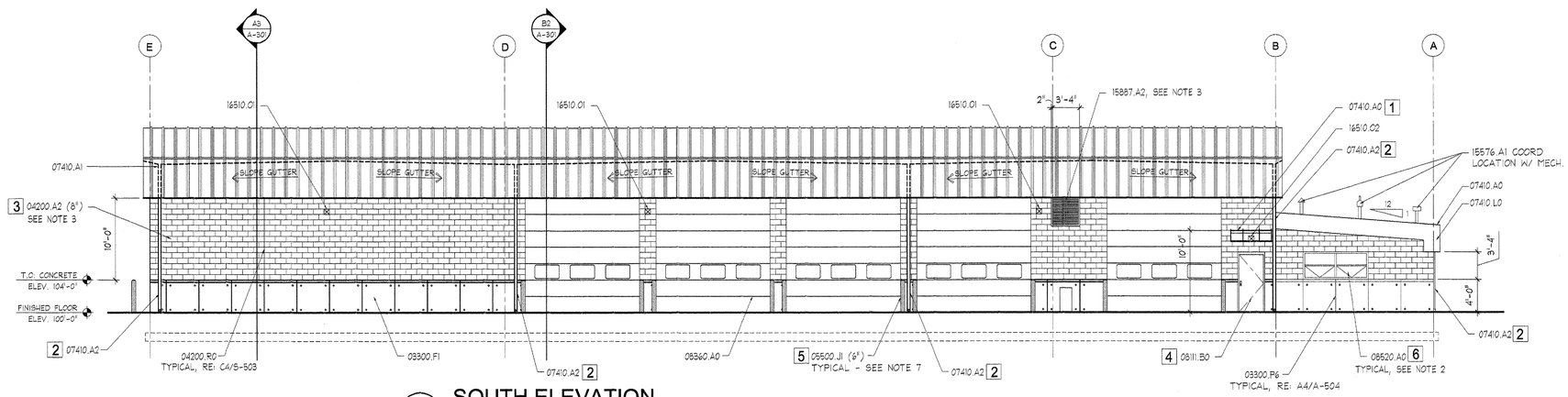

B2 SOUTH ELEVATION

SCALE: 1/8" = 1'-0"

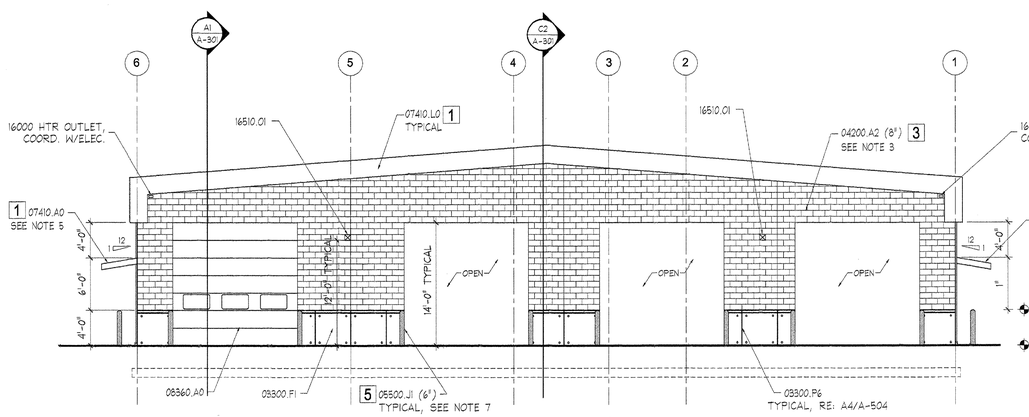

A2 WEST ELEVATION

SCALE: 1/8" = 1'-0"

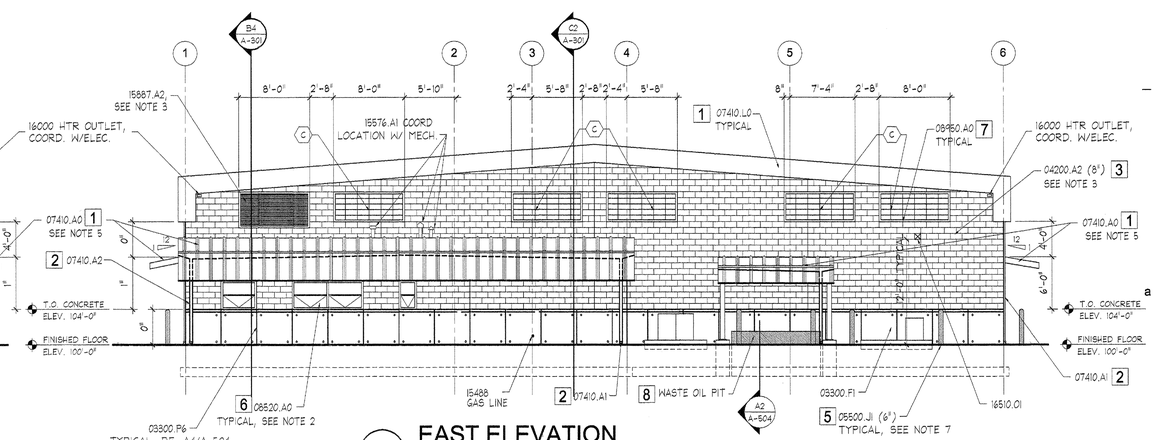

A4 EAST ELEVATION

SCALE: 1/8" = 1'-0"

KEYNOTES

03300.C1	* FOOTING - RE: STRUCTURAL
03300.F1	* CAST-IN-PLACE REINF. CONC. - RE: STRUCTURAL
03300.P5	* CHAMFER JOINT
04200.A2	* CMU (SIZE)
04200.R0	* MASONRY CONTROL JOINT (MCJ)
05500.J1	* PIPE BOLLARD (DIA.), GALV. & PAINTED
07410.A0	* STANDING SEAM METAL ROOF
07410.A1	* GUTTER
07410.A2	* DOWNSPOUT
07410.L0	* METAL FASCIA, COLOR CLAD
08111.B0	* HOLLOW METAL DOOR / FRAME, PAINTED
08360.A0	* OVERHEAD SECTIONAL DOOR
08520.A0	* WINDOW UNIT, PREFINISHED
15488	* GAS LINE
08950.A0	* TRANSLUCENT WALL AND SKYLIGHT SYSTEM
15576.A1	* MECH. PENETRATION - RE: GEN. NOTE 3
15887.A2	* LOUVER W/ BIRD SCREEN - RE: GEN. NOTE 3
16000	* HTR OUTLET, COORD. W/ELEC.
16510.01	* EXTERIOR LIGHTING
16510.02	* EXTERIOR LIGHTING IN CANOPY

NOTES - GENERAL

1. FOR FRAME TYPES, SEE SHT A-601.
2. FOR GLASS TYPES, SEE SHT A-601.
3. MECHANICAL OPENINGS, SEE MECHANICAL PLANS FOR SIZE AND TYPE. FOR OPENING TYPE, SEE C3/A-501.
4. TYPICAL CMU MASONRY CONTROL JOINT (MCJ), SEE C2/S-503.
5. PAINT UNDERSIDE OF CANOPIES.
6. PAINT UNDERSIDE OF WASTE OIL CANOPY.
7. TWO BOLLARDS @ EA. OVERHEAD DOOR JAMB - RE: DETAIL A1/A-504
8. SLOPE INTERAL GUTTER TO DOWNSPOUTS. MIN. GUTTER DEPTH 3" TO 6" MAX

COLOR SCHEDULE / LEGEND

1	07410.A0 - METAL ROOF & FASCIA : PREFINISHED
2	07410.A1 - DOWNSPOUTS : PREFINISHED TO MATCH COLOR 1
3	04200.A2 - CMU : CLEAR WATERPROOFING
4	08111.B0 - DOORS & FRAMES : WHITE
5	05500.J1 - BOLLARDS : OSHA SAFETY (YELLOW)
6	08520.B0 - WINDOW UNITS : PREFINISHED
7	08950.A0 - TRANSLUCENT WALL PANEL : WHITE
8	03300 WASTE OIL PIT - OSHA SAFETY (RED)

Utah Department of Transportation
Maintenance Facility

ISSUE

Exterior Elevations

A-201

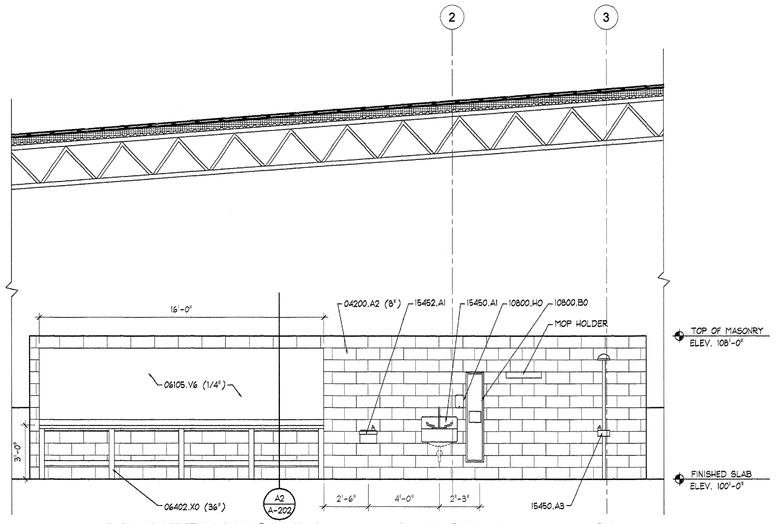

D1 MAINTENANCE BAY - INTERIOR ELEVATION

SCALE: 1/4" = 1'-0"

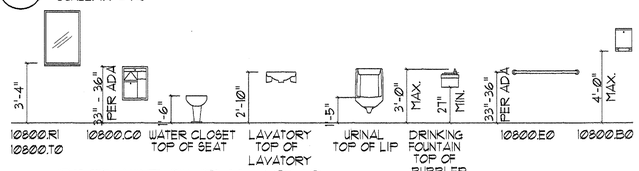

C1 FIXTURE ELEVATIONS

SCALE: N.T.S.

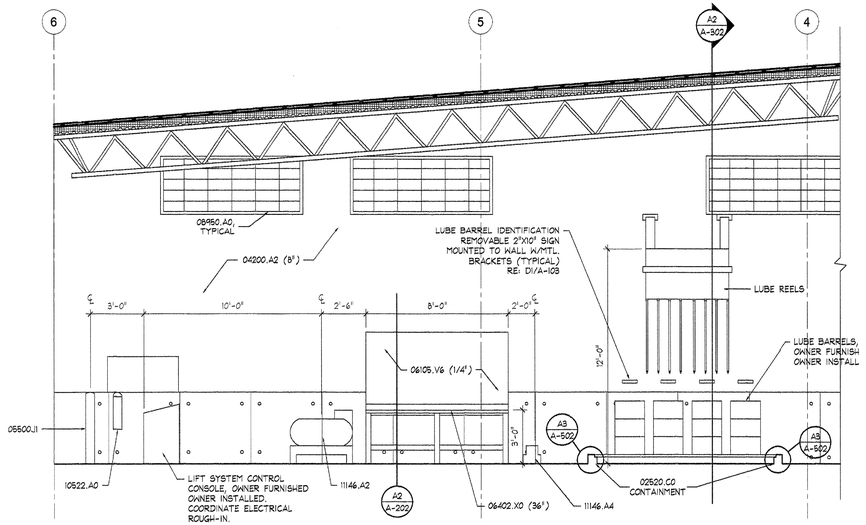

D3 INTERIOR ELEVATION

SCALE: 1/4" = 1'-0"

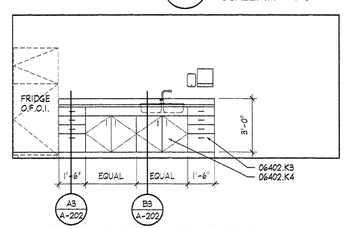

C3 INTERIOR ELEVATION

SCALE: 1/4" = 1'-0"

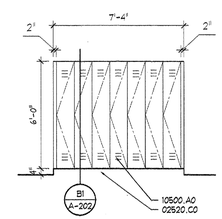

C4 INTERIOR ELEVATION

SCALE: 1/4" = 1'-0"

KEYNOTES

02520.C0	*	CONCRETE CURB
02720.M0	*	FLOOR DRAIN - RE:MECHANICAL/PLUMBING
04200.A2	*	CMU (SIZE)
04200.R0	*	MASONRY CONTROL JOINT (MCJ)
05500.J1	*	PIPE BOLLARD (DIA.), GALV. & PAINTED
06105.L2	*	BLOCKING AS REQUIRED
06105.P1	*	2"x4"
06105.P6	*	4"x4"
06105.R2	*	SHEATHING-PLYWOOD(SIZE)
06105.V6	*	PEGBOARD(THICKNESS)
06402.H1	*	ADJUSTABALE SHELVES
06402.K3	*	BASE UNIT W/DRAWERS (PL. LAM.)
06402.K4	*	BASE UNIT W/DRW & ADJ. SHELF (PL. LAM.)
06402.X0	*	WORKBENCH (SIZE)
08950.A0	*	*TRANSLUCENT WALL & SKYLIGHT SYSTEM
09300.A1	*	TILE TYPE #1
09300.A2	*	TILE TYPE #2
09300.C0	*	TILE BASE
09300.D1	*	BULLNOSE TILE
10500.A0	*	METAL LOCKERS
10522.A0	*	FIRE EXTINGUISHER
10800.B0	*	PAPER TOWEL DISPENSER & WASTE RECEPTACLE
10800.C0	*	TOILET TISSUE DISPENSER
10800.E0	*	GRAB BAR
10800.H0	*	SOAP DISPENSER
10800.R1	*	FRAMED MIRROR (SIZE)
10800.T0	*	SHELF
11146.A2	*	AIR COMPRESSOR
11146.A4	*	WASTE OIL PUMP
15450.A1	*	UTILITY SINK
15452.A1	*	DRINKING FOUNTAIN
15459.01	*	GAS FIRED W.H.
15550.A1	*	GAS FIRED FURN.

NOTES - GENERAL

1. HIGH PRESSURE LAMINATE
2. PROVIDE QUANTITY OF ADJUSTABLE SHELVING PER ELEVATION
3. BACKSPLASH TYPICAL HEIGHT 4"
4. SEE INTERIOR ELEVATION FOR NUMBER OF EQUAL SHELVES OR DRAWERS
5. SEE C1/A-202 FOR TYPICAL FIXTURE MOUNTING HEIGHT
6. SEE A3/A-301 FOR ADDITIONAL INFO.

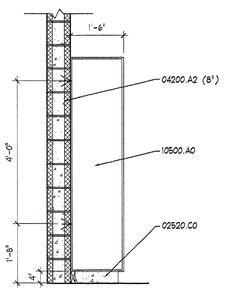

B1 LOCKERS SECTION

SCALE: 1/2" = 1'-0"

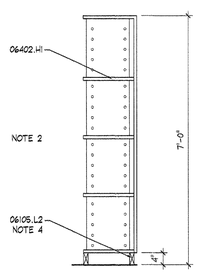

B2 SHELVING SECTION

SCALE: 1/2" = 1'-0"

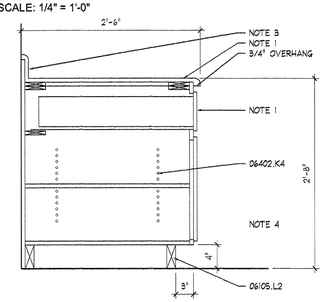

B3 BASE CABINET SECTION

SCALE: 1" = 1'-0"

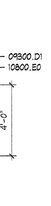

B4 INTERIOR ELEVATION

SCALE: 1/4" = 1'-0"

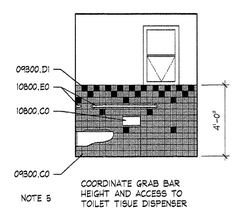

B5 INTERIOR ELEVATION

SCALE: 1/4" = 1'-0"

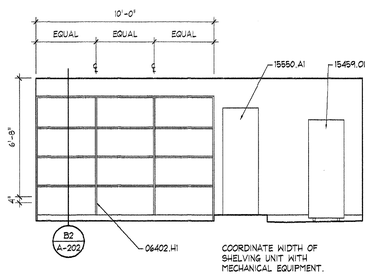

A1 INTERIOR ELEVATION

SCALE: 1/4" = 1'-0"

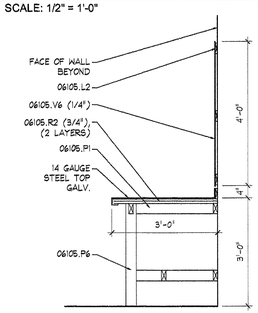

A2 WORK BENCH SECTION

SCALE: 1/2" = 1'-0"

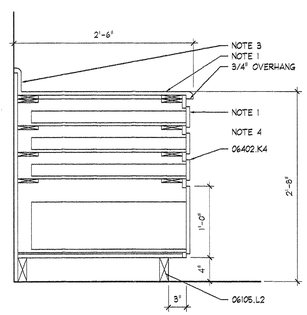

A3 BASE CABINET SECTION

SCALE: 1" = 1'-0"

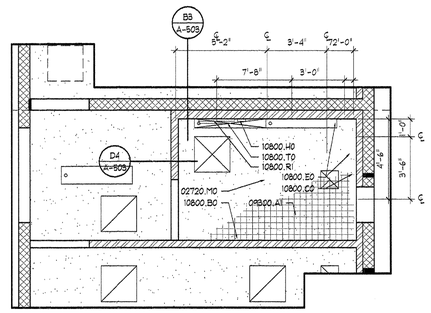

A4 ENLARGED FLOOR PLAN

SCALE: 1/2" = 1'-0"

Utah Department of Transportation
Maintenance Facility

ISSUE

Interior Elevations

A-202

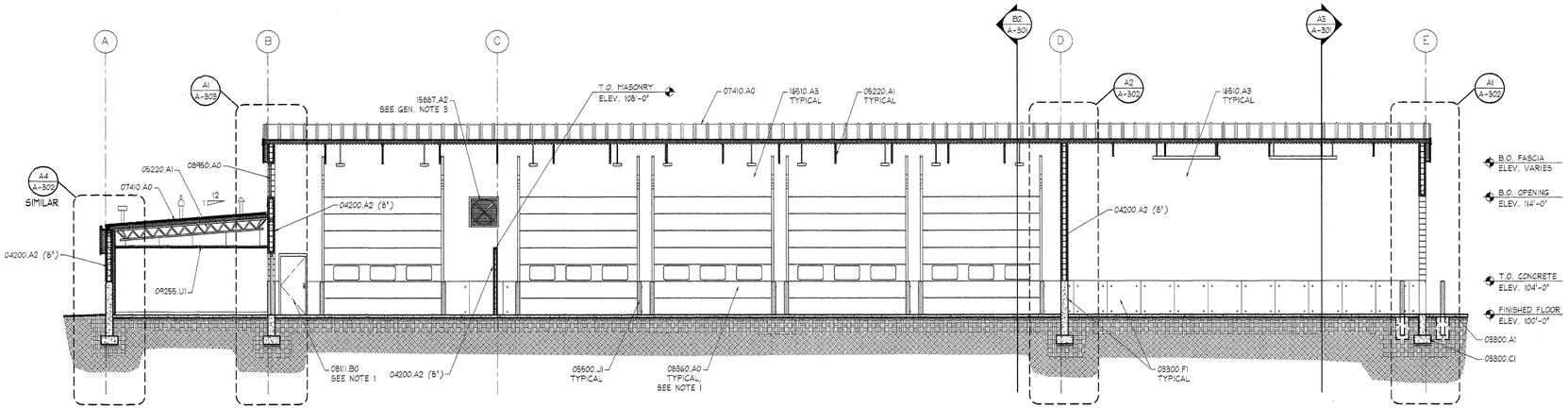

C2 BUILDING DETAIL

SCALE: 1/8" = 1'-0"

KEYNOTES

03300.A1	* CONCRETE SLAB-ON-GRADE - RE: STRUCTURAL
03300.C1	* FOOTING - RE: STRUCTURAL
03300.F1	* CAST-IN-PLACE REINFORCED CONC. ARCHITECTURAL FINISH
04200.A2	* CMU (SIZE)
05120.A1	* STEEL BEAM - RE: STRUCTURAL
05120.B1	* COLUMN, PAINTED - RE: STRUCTURAL
05220.A1	* STEEL JOISTS - RE: STRUCTURAL
05500.J1	* PIPE BOLLARD (DIAMETER) GALVANIZED AND PAINTED
07410.A0	* STANDING SEAM METAL ROOF
08111.B0	* HOLLOW METAL DOOR
08360.A0	* OVERHEAD SECTIONAL DOOR
08360.B0	* DOOR TRACK
08950.A0	* TRANSLUCENT WALL AND SKYLIGHT SYSTEM
08520.A0	* WINDOW UNIT
09255.U1	* SUSPENDED CEILING SYSTEM
10500.B0	* METAL STORAGE LOCKERS
14620.A0	* TROLLEY HOIST (SIZE) - RE: STRUCTURAL
15887.A2	* LOUVER W/BIRD SCREEN
16510.A3	* INTERIOR LIGHTING - FLOURESCENT

NOTES

1. SEE SHEET A-601 FOR WINDOW AND DOOR TYPES. SEE SHEET A-101 FOR CALL-OUTS.

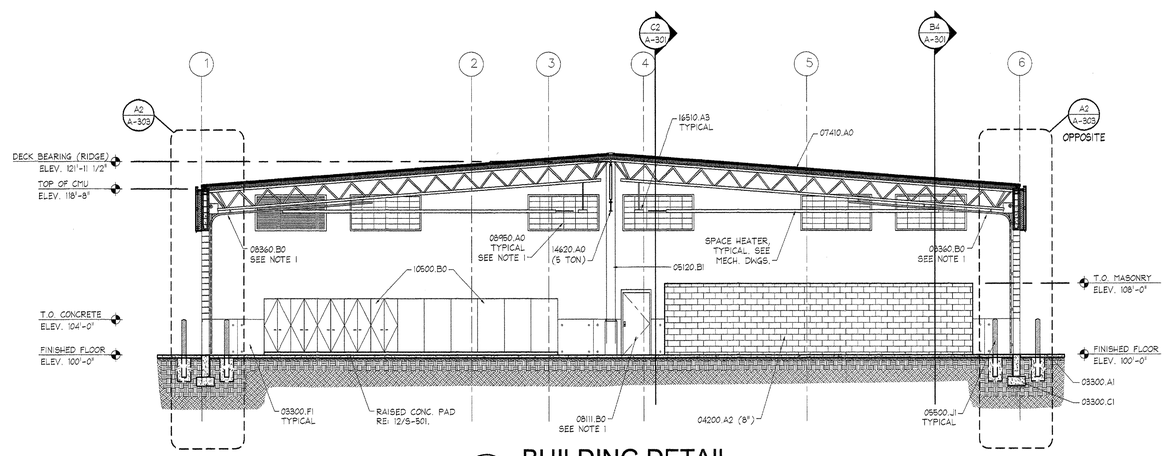

B2 BUILDING DETAIL

SCALE: 1/8" = 1'-0"

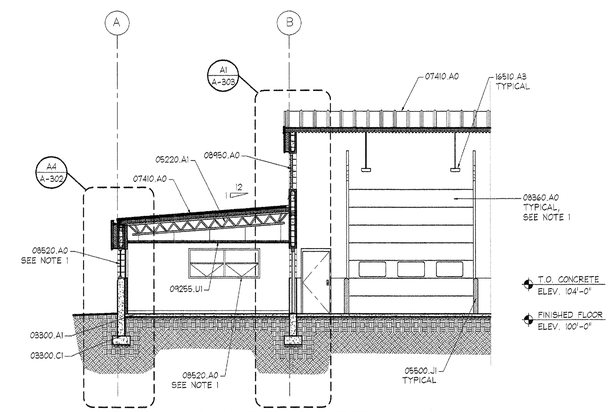

B4 BUILDING DETAIL

SCALE: 1/8" = 1'-0"

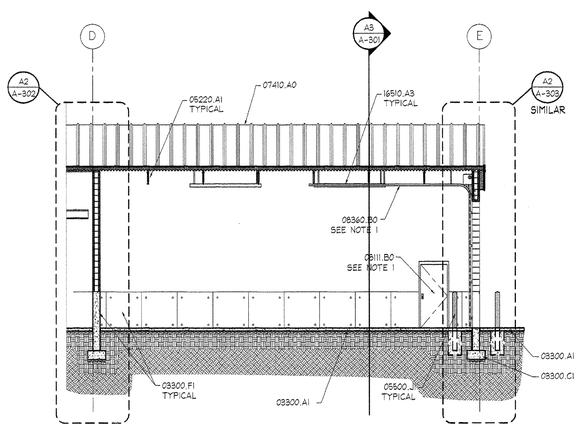

A1 BUILDING DETAIL

SCALE: 1/8" = 1'-0"

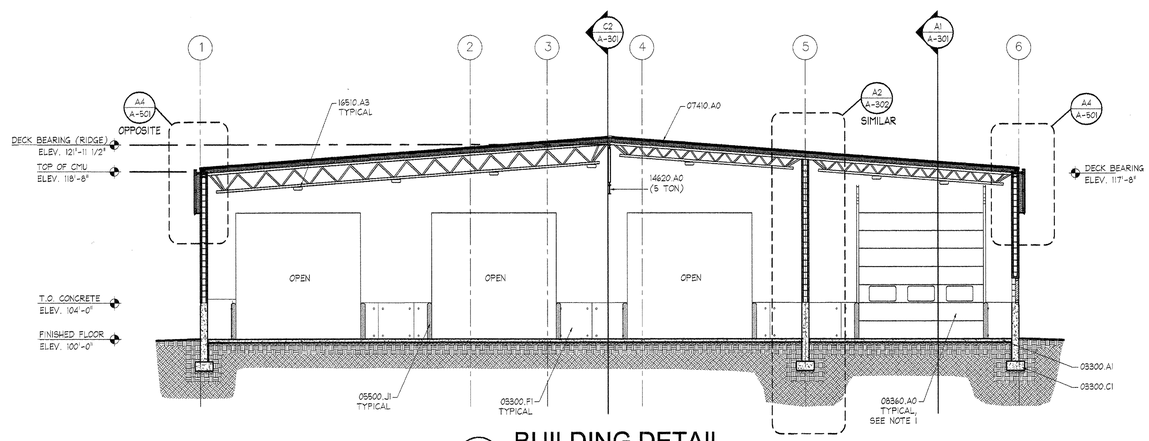

A3 BUILDING DETAIL

SCALE: 1/8" = 1'-0"

Utah Department of Transportation
Maintenance Facility

ISSUE

Building Sections

A-301

KEYNOTES

02200.B0	* GRAVEL BASE - RE: STRUCTURAL
03300.A1	* CONCRETE SLAB-ON-GRADE - RE: STRUCTURAL
03300.C1	* FOOTING - RE: STRUCTURAL
03300.F1	* CAST-IN-PLACE REINFORCED CONC. ARCHITECTURAL FINISH
04200.A2	* CMU (SIZE)
04200.D1	* CMU LINTEL- RE: STRUCTURAL
04200.G0	* BLOCK INSULATION
05500.J1	* PIPE BOLLARD (DIAMETER) - GALVANIZED & PAINTED
06105.R2	* SHEATHING - PLYWOOD (SIZE)
07210.A1	* BATT INSULATION (R-VALUE)
07210.D0	* VAPOR BARRIER
07210.E0	* FOUNDATION WALL INSULATION (THICKNESS)
07410.A0	* STANDING SEAM METAL ROOF
07905.A0	* SEALANT
08950.A0	* TRANSLUCENT WALL AND SKYLIGHT SYSTEMS
09255.H1	* METAL STUD (SIZE, SPACING)
09255.J0	* STEEL RUNNER
09255.U1	* SUSPENDED CEILING SYSTEM

NOTES

1. TWO BOLLARDS REQUIRED PER SECTIONAL DOOR JAMB. SEE DETAIL A1/A504. FILL PIPE W/CONCRETE.
2. ROUND TOP OF CONCRETE FOR DRAINAGE
3. SLOPED FOR DRAINAGE

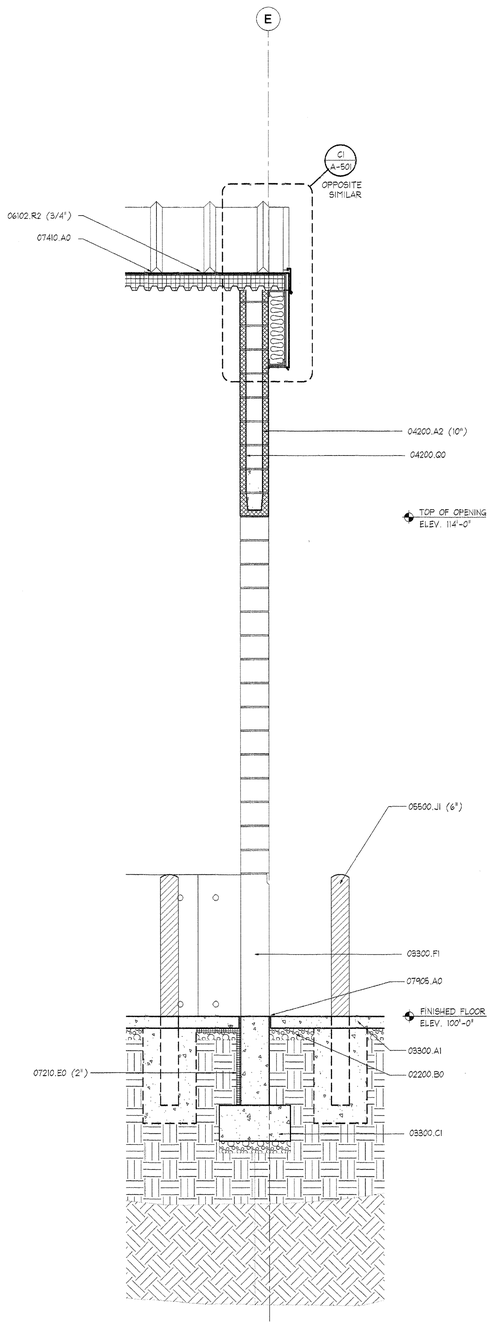

A1 WALL SECTION
SCALE: NONE

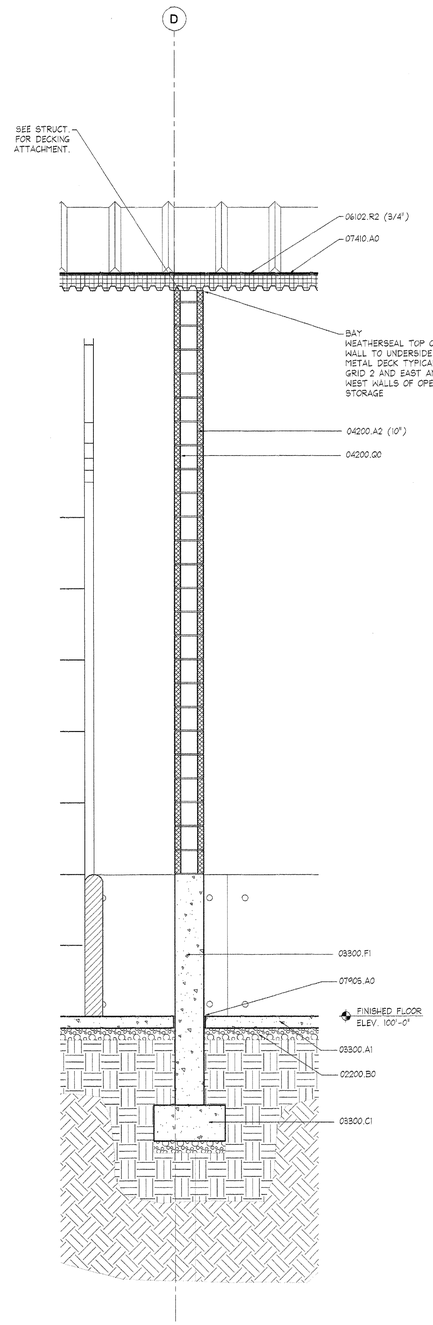

A2 WALL SECTION
SCALE: NONE

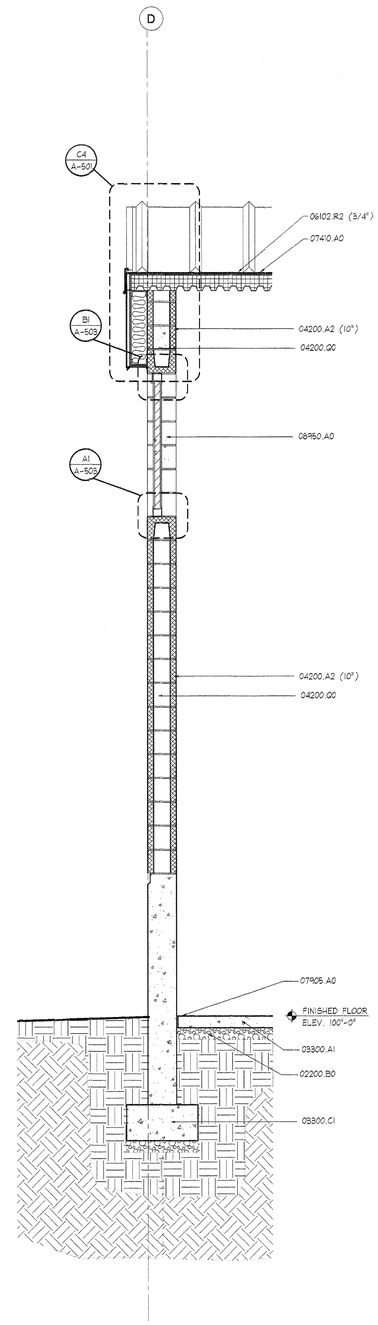

A3 WALL SECTION
SCALE: NONE

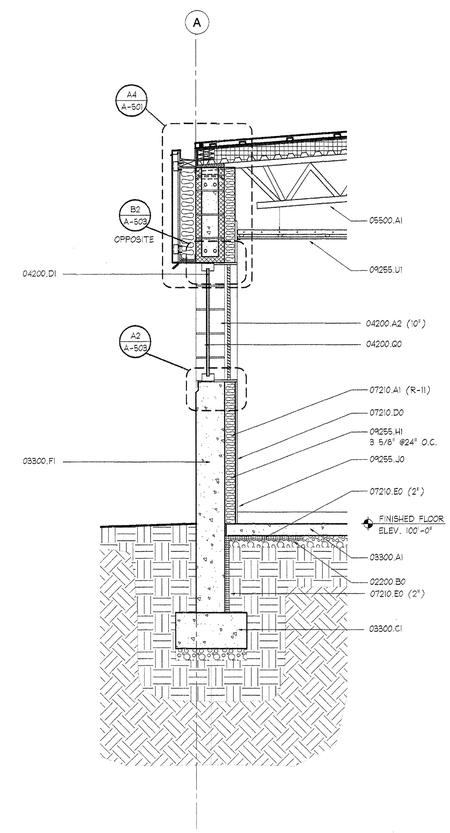

A4 WALL SECTION
SCALE: NONE

Utah Department of Transportation
Maintenance Facility

ISSUE

Wall Sections

A-302

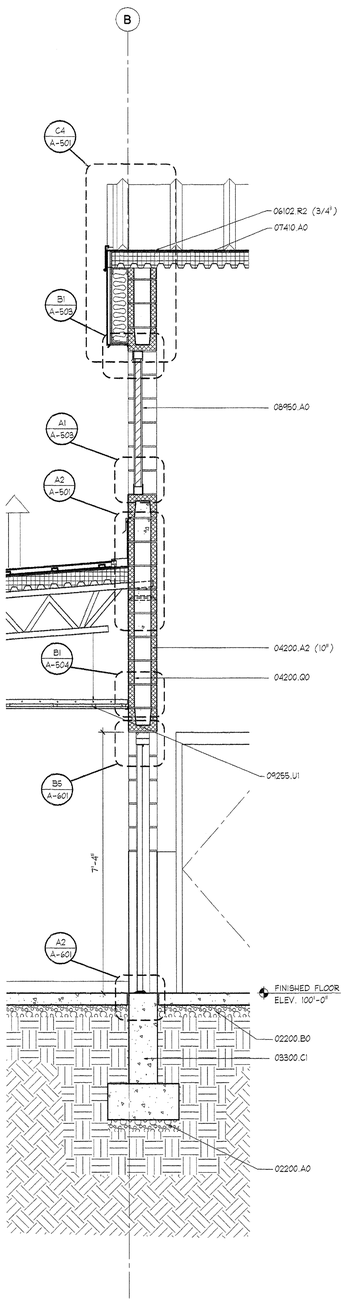

A1 WALL SECTION

SCALE: NONE

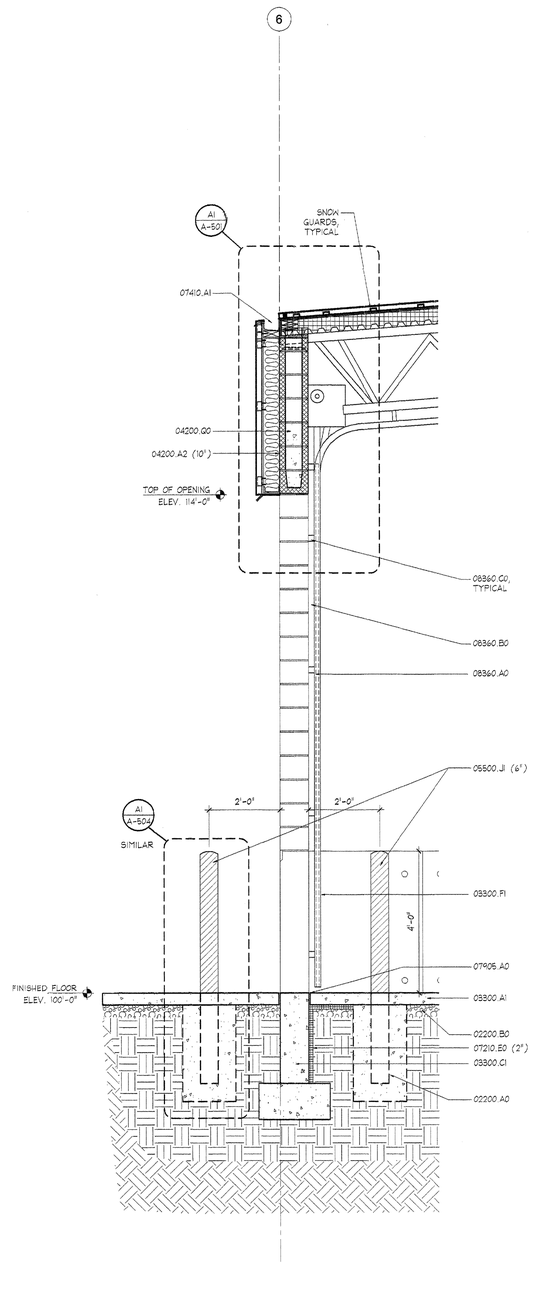

A2 WALL SECTION

SCALE: NONE

KEYNOTES

02200.A0	* COMPACT FILL - RE: STRUCTURAL
02200.B0	* GRAVEL BASE - RE: STRUCTURAL
03300.A1	* CONCRETE SLAB-ON-GRADE - RE: STRUCTURAL
03300.C1	* FOOTING - RE: STRUCTURAL
03300.F1	* CAST-IN-PLACE REINFORCED CONC. ARCHITECTURAL FINISH
04200.A2	* CMU (SIZE)
04200.Q0	* BLOCK INSULATION
05220.A1	* STEEL JOISTS - RE: STRUCTURAL
05500.J1	* PIPE BOLLARD (DIAMETER) - GALVANIZED & PAINTED
06105.R2	* SHEATHING - PLYWOOD (SIZE)
07210.E0	* FOUNDATION WALL INSULATION (THICKNESS)
07410.A0	* STANDING SEAM METAL ROOF
07410.A2	* DOWNSPOUT
07905.A0	* SEALANT
08360.A0	* OVERHEAD SECTIONAL DOOR
08360.B0	* DOOR TRACK
08950.A0	* TRANSLUCENT WALL AND SKYLIGHT SYSTEMS
09255.U1	* SUSPENDED CEILING SYSTEM

Utah Department of Transportation
Maintenance Facility

ISSUE

Wall Sections

A-303

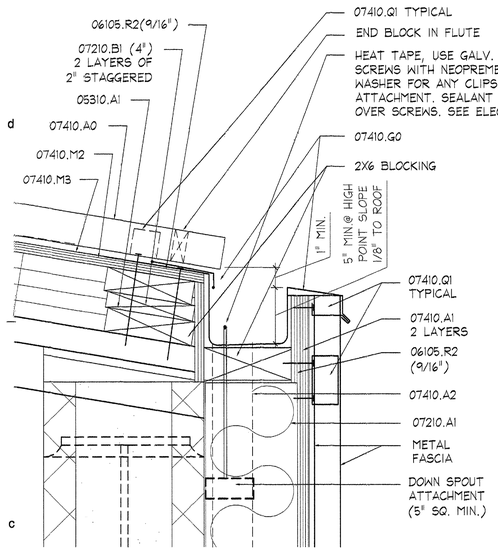

NOTE: FOR METAL GUTTER AND DOWNSPOUT FOLLOW "SMAGNA" SHEET METAL STUDS AND FIG. 1-4 AND 1-2 AND CHAPTER #1 FOR DOWNSPOUTS

C1 WALL DETAIL
SCALE: NONE

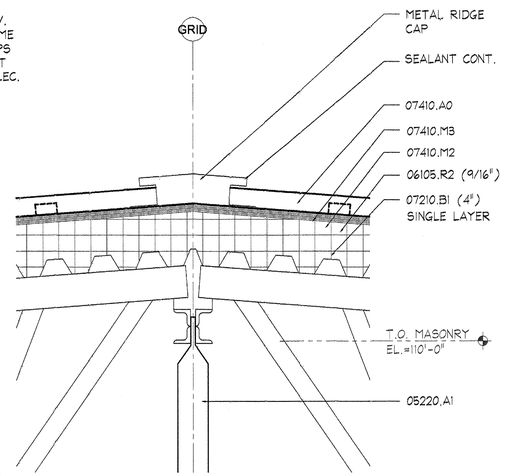

SEE SHT. A-301 FOR BEARING POINT

C2 WALL DETAIL
SCALE: NONE

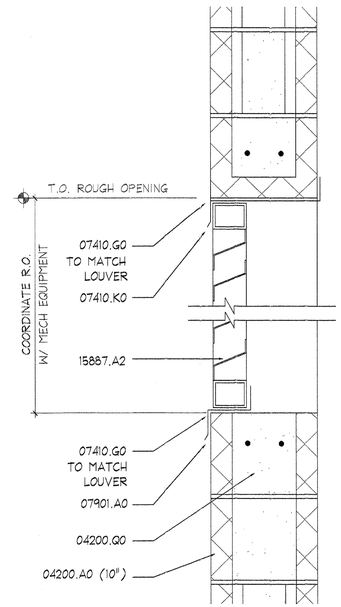

C3 WALL DETAIL
SCALE: NONE

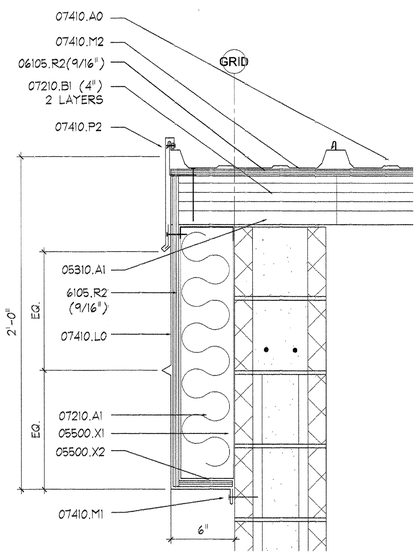

C4 WALL DETAIL
SCALE: NONE

KEYNOTES

03300.A1	* CONCRETE SLAB-ON-GRADE - RE: STRUCTURAL
04200.A2	* CMU (SIZE)
04200.D1	* CMU LINTEL- RE: STRUCTURAL
04200.G0	* BLOCK INSULATION
05120.A1	* STEEL BEAM, PAINTED - RE: STRUCTURAL
05220.A1	* STEEL JOISTS - RE: STRUCTURAL
05310.A1	* METAL DECK - RE: STRUCTURAL
05500.A2	* L (SIZE) - GALV
05500.X1	* STEEL STUD - RE: STRUCTURAL
05500.X2	* STEEL RUNNER - RE: STRUCTURAL
06105.R2	* SHEATHING - PLYWOOD (SIZE)
07210.A1	* BATT INSULATION (R-VALUE)
07210.B1	* RIGID INSULATION 2 LAYERS
07410.A0	* STANDING SEAM METAL ROOF
07410.A2	* DOWNSPOUT
07410.A1	* CONTINUOUS GUTTER (SITE FABRICATED)
07410.G0	* FLASHING TO MATCH ROOF PANELS
07410.K0	* SEALANT
07410.L0	* METAL FACIA
07410.M1	* METAL SOFFIT
07410.M2	* ICE & WATER SHIELD(WRAP CONT. UNDER GUTTER) & OVER FRONT EDGE.
07410.M3	* ROOF FELT
07410.P1	* PANEL TRIM
07410.P2	* RAKE TRIM
07410.P3	* CORNER TRIM
07410.Q1	* CLIP (ATTACH THROUGH METAL DECK)
07410.R1	* METAL EAVE CLOSURE
07901.A0	* SEALANT
15887.A2	* LOUVER W/BIRD SCREEN

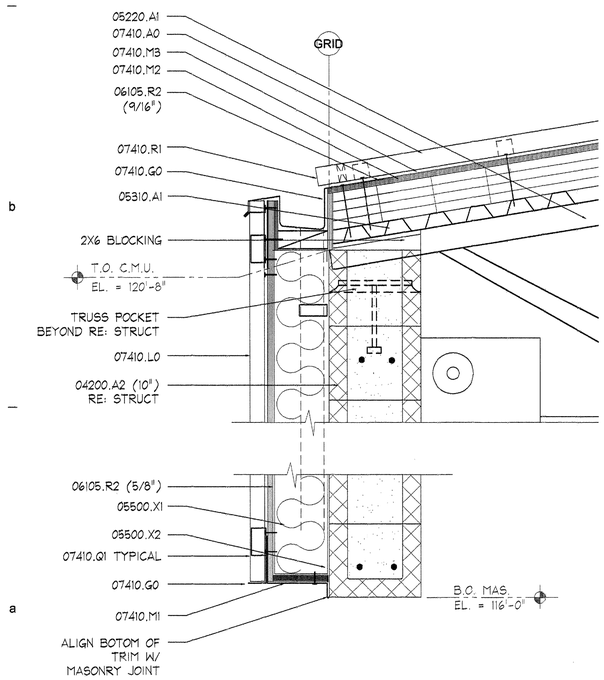

A1 WALL DETAIL
SCALE: NONE

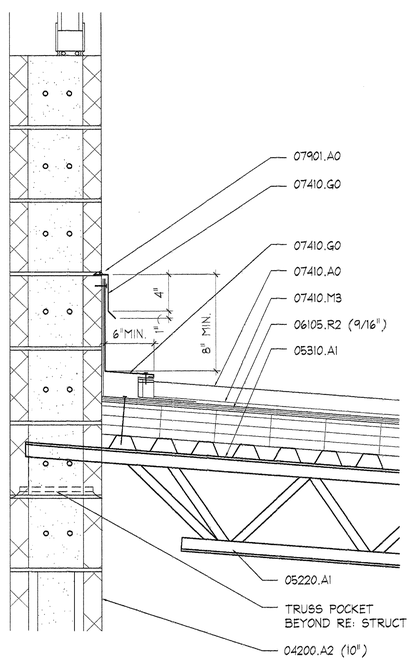

A2 WALL DETAIL
SCALE: NONE

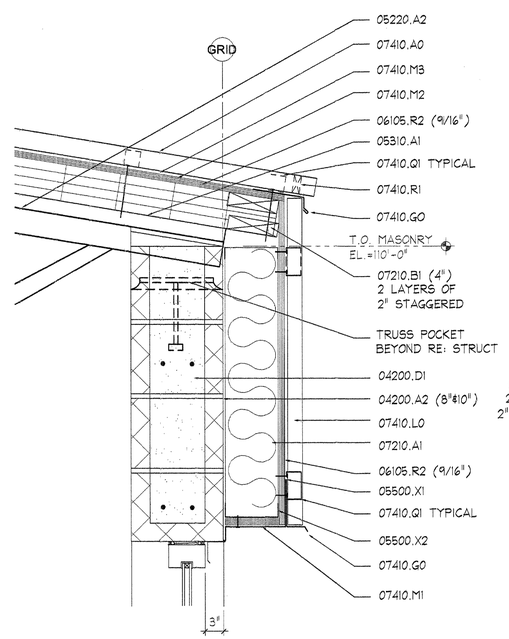

A3 WALL DETAIL
SCALE: NONE

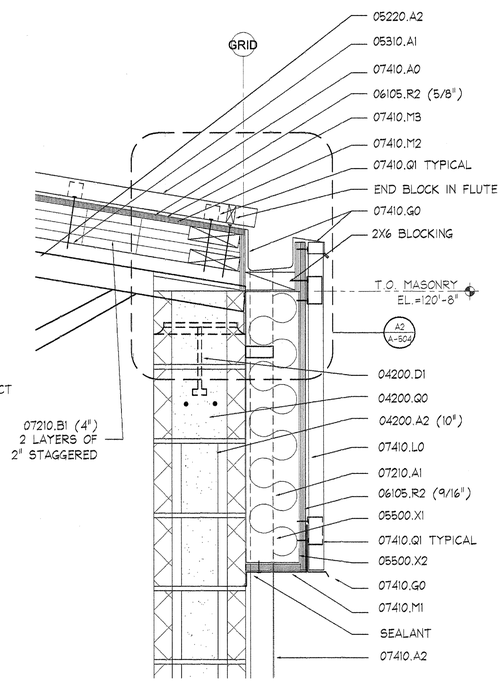

A4 WALL DETAIL
SCALE: NONE

Utah Department of Transportation
Maintenance Facility

ISSUE

Building Details

A-501

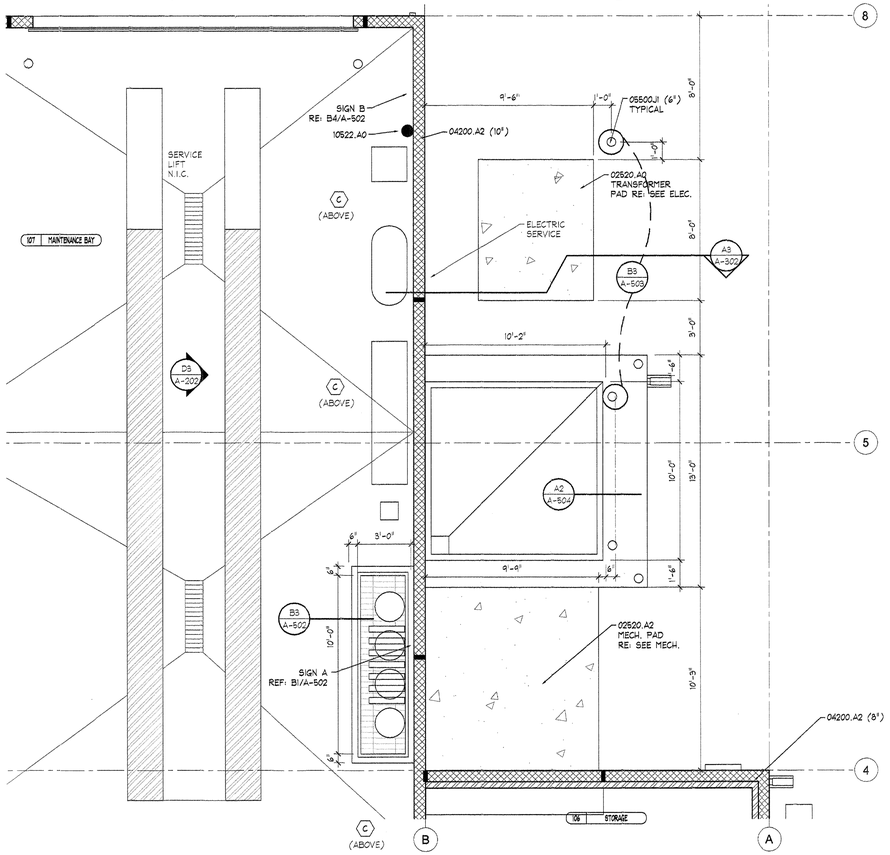

C1 ENLARGED FLOOR PLAN

SCALE: 1/2" = 1'-0"

B3 CURB DETAIL

SCALE: NONE

KEYNOTES

02200.B0	* GRAVEL BASE
03300.A1	* SLAB-ON-GRADE - RE: STRUCTURAL
03300.F0	* CAST-IN-PLACE REINFORCED CONCRETE - RE: STRUCTURAL
04200.A2	* CMU (SIZE)
04200.R0	* MASONRY CONTROL JOINT (MCJ)
05500.J1	* PIPE BOLLARD (DIA.), GALV. & PAINTED
06402.K4	* BASE UNIT W/DRW & ADJ. SHELF (PL. LAM.)
06402.X0	* WORKBENCH (SIZE)
08111.B0	* HOLLOW METAL DOOR
08360.B0	* DOOR TRACK
08960.A0	* TRANSLUCENT WALL & SKYLIGHT SYSTEM
09800.A1	* SPECIAL COATING
10522.A0	* FIRE EXTINGUISHER
11146.A2	* AIR COMPRESSOR
11146.A2	* AIR COMPRESSOR
14620.A0	* TROLLEY HOIST (SIZE) - RE: STRUCTURAL

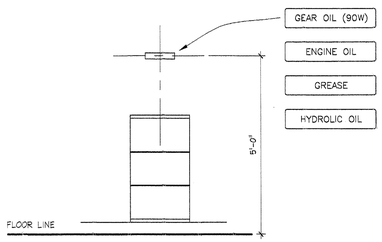

RE: SPECIFICATION - 10425 FOR MORE INFORMATION

A1 SIGNAGE - A

SCALE: NONE

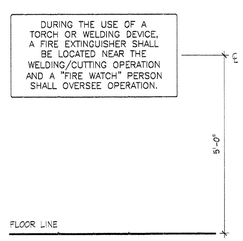

RE: SPECIFICATION - 10425 FOR MORE INFORMATION

A2 SIGNAGE - B

SCALE: NONE

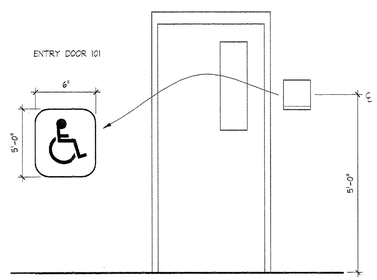

RE: SPECIFICATION - 10425 FOR INFO.

A3 SIGNAGE - C

SCALE: NONE

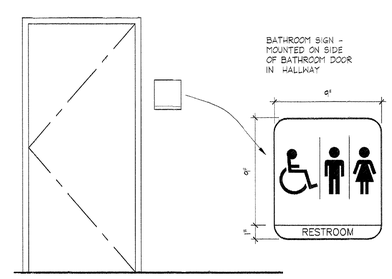

RE: SPECIFICATION - 10425 FOR INFO.

A4 SIGNAGE - D

SCALE: NONE

Utah Department of Transportation
Maintenance Facility

ISSUE

Building Details

A-502

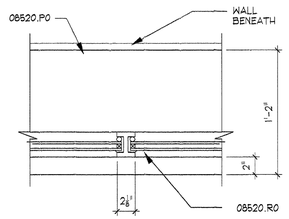

D1 MULLION DETAIL
SCALE: 1 1/2" = 1'-0"

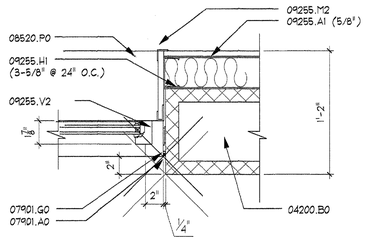

D2 JAMB DETAIL
SCALE: 1 1/2" = 1'-0"

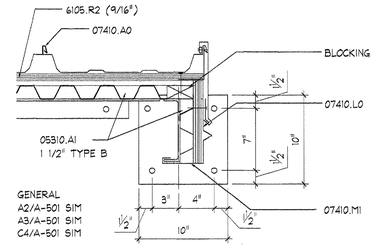

D3 DOOR EYEBROW DETAIL
SCALE:

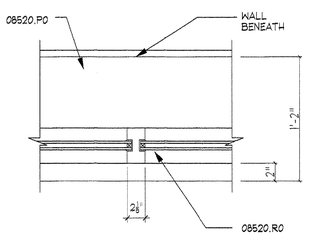

C1 MULLION DETAIL
SCALE: 1 1/2" = 1'-0"

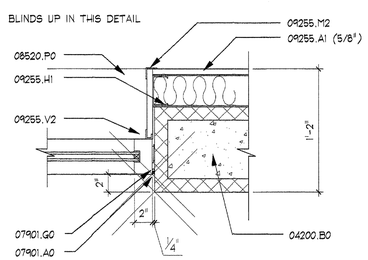

C2 JAMB DETAIL
SCALE: 1 1/2" = 1'-0"

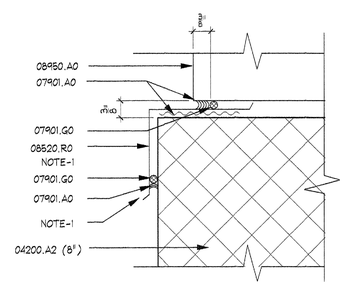

C3 BACKER ROD & SEALANT -SILL
SCALE: 3" = 1'-0"

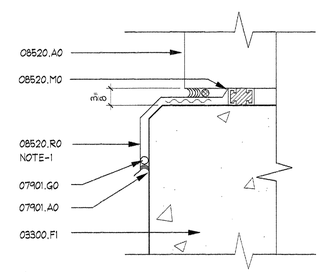

C4 BACKER ROD & SEALANT -SILL
SCALE: 3" = 1'-0"

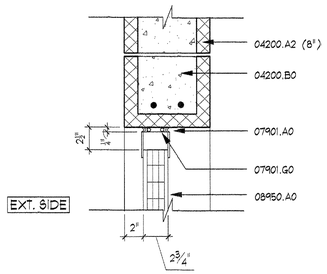

B1 WINDOW DETAIL
SCALE: 1 1/2" = 1'-0"

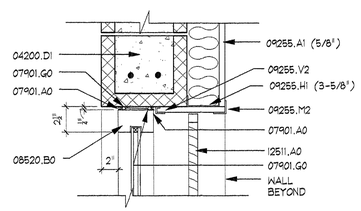

B2 WINDOW DETAIL
SCALE: 1 1/2" = 1'-0"

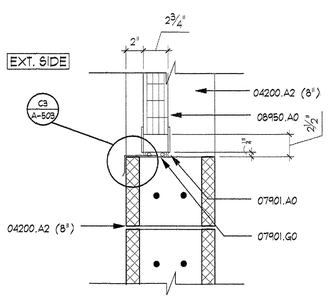

A1 SILL (JAMB SIM.)
SCALE: 1 1/2" = 1'-0"

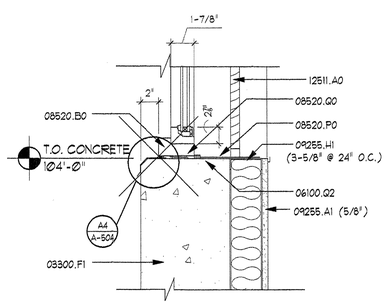

A2 SILL DETAIL
SCALE: 1 1/2" = 1'-0"

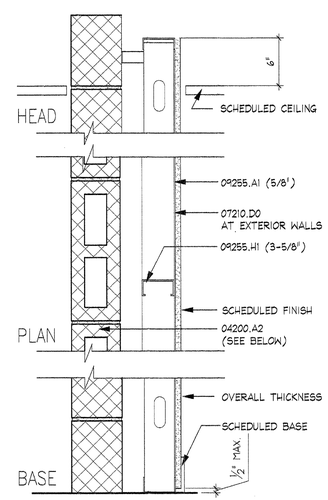

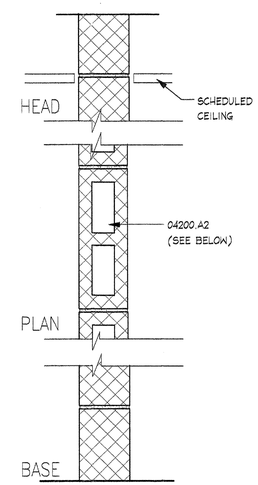

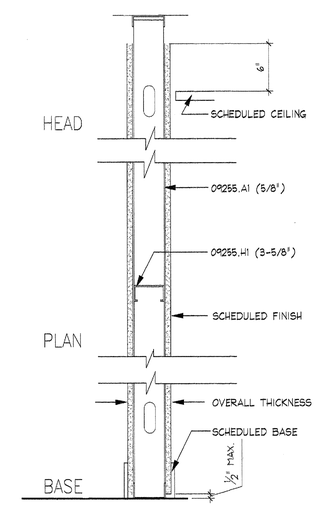

TYPE	OVERALL THICKNESS	STUD/ BLOCK SIZE	FIRE RATING	U.L. LISTING	S.T.C. RATING	COMMENT
A1		SEE FL.PLN.	N.R.	---	---	---

TYPE	OVERALL THICKNESS	STUD/ BLOCK SIZE	FIRE RATING	U.L. LISTING	S.T.C. RATING	COMMENT
B1	SEE FL.PLN.	8"	N.R.	---	---	---

TYPE	OVERALL THICKNESS	STUD/ BLOCK SIZE	FIRE RATING	U.L. LISTING	S.T.C. RATING	COMMENT
C1	SEE FL.PLN.	3 5/8"	N.R.	---	---	---

A4 PARTITION TYPES
SCALE: NTS

KEYNOTES

03300.B1 * CONCRETE SLAB (RE:STRUCTURAL)
03300.F1 * CAST-IN-PLACE REINFORCED CONC. ARCHITECTURAL FINISH
04200.A2 * CMU (SIZE)
04200.B0 * GROUT SOLID
04200.D1 * CMU LINTEL - RE: STRUCTURAL
06100.G2 * SHIM AS REQUIRED
07210.D0 * VAPOR BARRIER
07901.A0 * SEALANT
07901.G0 * BACKER ROD
08520.A0 * WINDOW UNIT
08520.B0 * FIXED WINDOW
08520.M0 * SILL STARTER - SET IN SEALANT
08520.P0 * BREAKMETAL
08520.Q0 * WEATHER STRIPPING
08520.R0 * ALUM. FLASHING FINISH TO MATCH FRAME
08800.G1 * CLEAR INSULATED GLASS (SIZE)
08950.A0 * TRANSLUCENT WALL PANEL
09255.A1 * GYPSUM BOARD (THICKNESS)
09255.B2 * TYPE 'X' GYPSUM BOARD (THICKNESS)
09255.H0 * METAL STUDS
09255.H1 * METAL STUDS (SIZE, SPACING)
09255.M2 * METAL CORNER BEAD (TYP)
09255.V2 * LC-BEAD (PREFERRED, USG 200-A TRIM)
09300.A1 * TILE UNGLAZED CERAMIC MOSAIC TILE
09300.A2 * TILE GLAZED WALL TILE
09300.C0 * TILE BASE (NOTE 4)
09300.D1 * BULLNOSE TRIM UNIT
09300.G1 * MORTOR BED
09300.G4 * WATERPROOF MEMBRANE
12511.A0 * HORIZONTAL LOUVER BLINDS

NOTES - GENERAL

1. ALL FLASHING TO BE PAINTED TO MATCH FRAMES.
2. FLOOR SETTING BED WILL BE SLOPED TO DRAIN.
3. SEE SHEET A-601, FINISH SCHEDULE.
4. BASE TO BE UNGLAZED CERAMIC MOSAIC TILE TO MATCH FLOOR.

Utah Department of Transportation
Maintenance Facility

ISSUE

Partition / Window Details

A-503

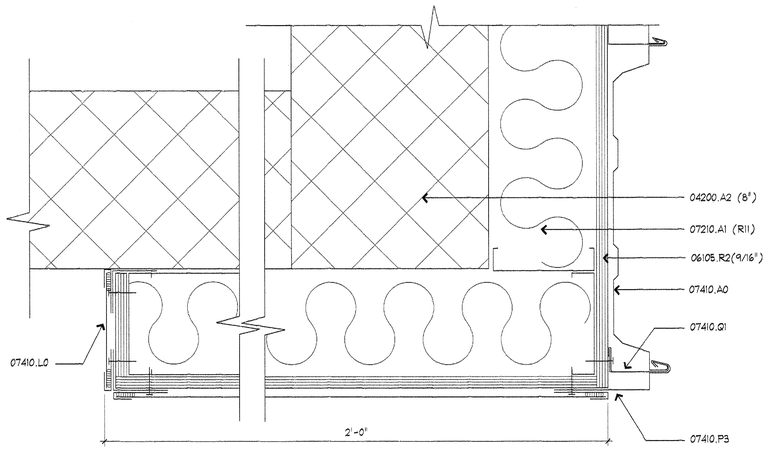

C1 FASCIA DETAIL
SCALE: NTS

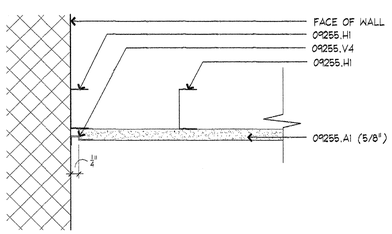

B1 WALL DETAIL
SCALE: NTS

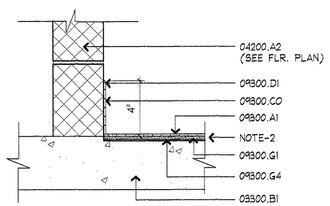

B2 BASE DETAIL
SCALE: 1 1/2" = 1'-0"

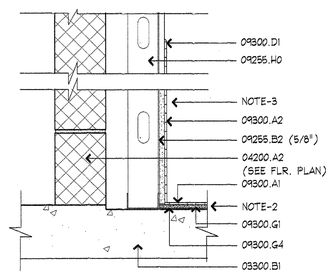

B3 BASE DETAIL
SCALE: 1 1/2" = 1'-0"

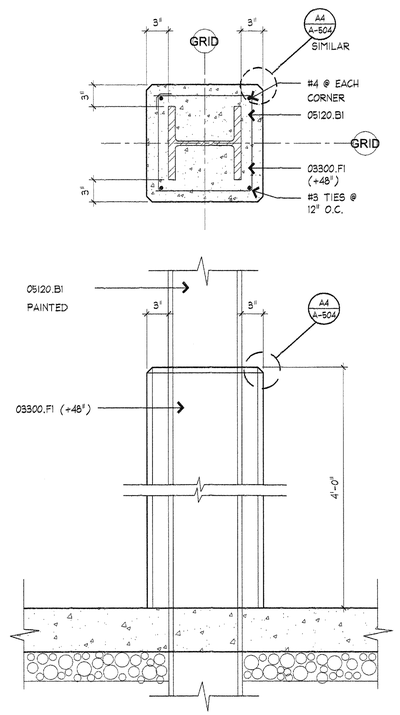

B4 CONCRETE COLUMN
SCALE: NTS

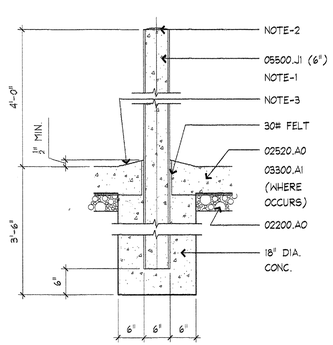

A1 BOLLARD DETAIL
SCALE: NTS

OR

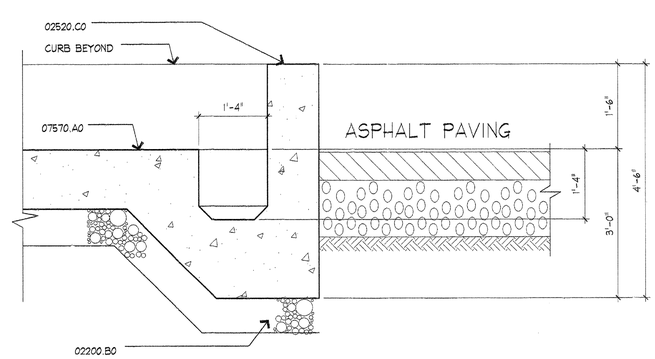

A2 WASTE OIL SLAB SECTION
SCALE: NTS

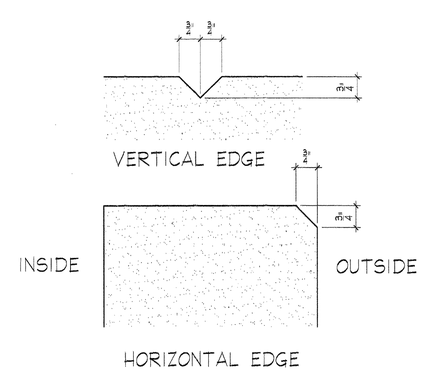

A4 CHAMFER DETAIL
SCALE: NTS

KEYNOTES

03300.B1	*	CONCRETE SLAB (RE:STRUCTURAL)
03300.F1	*	CAST-IN-PLACE REINFORCED CONC. ARCHITECTURAL FINISH
04200.A2	*	CMU (SIZE)
04200.B0	*	GROUT SOLID
04200.D1	*	CMU LINTEL - RE: STRUCTURAL
06100.G2	*	SHIM AS REQUIRED
07210.D0	*	VAPOR BARRIER
07901.A0	*	SEALANT
07901.G0	*	BACKER ROD
08520.A0	*	WINDOW UNIT
08520.B0	*	FIXED WINDOW
08520.M0	*	SILL STARTER - SET IN SEALANT
08520.P0	*	BREAKMETAL
08520.Q0	*	WEATHER STRIPPING
08520.R0	*	ALUM. FLASHING FINISH TO MATCH FRAME
08800.G1	*	CLEAR GLASS (1/4")
08950.A0	*	TRANSLUCENT WALL PANEL
09255.A1	*	GYPSUM BOARD (THICKNESS)
09255.B2	*	TYPE 'X' GYPSUM BOARD (THICKNESS)
09255.H0	*	METAL STUDS
09255.H1	*	METAL STUDS (SIZE, SPACING)
09255.M2	*	METAL CORNER BEAD (TYP)
09255.V2	*	LC-BEAD (PREFERRED, USG 200-A TRIM)
09300.A1	*	TILE UNGLAZED CERAMIC MOSAIC TILE
09300.A2	*	TILE GLAZED WALL TILE
09300.C0	*	TILE BASE (NOTE 4)
09300.D1	*	BULLNOSE TRIM UNIT
09300.G1	*	MORTOR BED
09300.G4	*	WATERPROOF MEMBRANE
12511.A0	*	HORIZONTAL LOUVER BLINDS

NOTES - GENERAL

1. PAINTED FINISH (YELLOW).
2. FILL PIPE WITH CONCRETE AND ROUND OFF.
3. SLOPE CONCRETE TO PIPE DRAIN.
4. BASE TO BE UNGLAZED CERAMIC MOSAIC TILE TO MATCH FLOOR.

Utah Department of Transportation
Maintenance Facility

ISSUE

Miscellanous Details

A-504

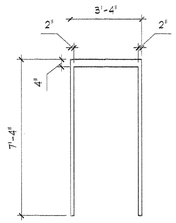

TYPE A

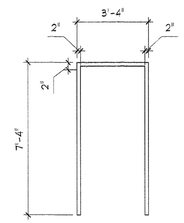

TYPE B

D3 FRAME TYPES

SCALE: NTS

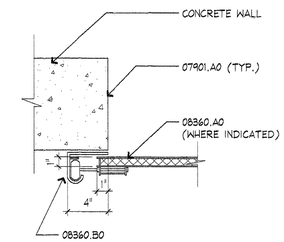

D4 JAMB DETAIL (MASONRY SIM.)

SCALE: NTS

KEYNOTES

03300.P5	* CHAMFER JOINT
04200.A2	* CMU (SIZE)
04200.B0	* GROUT SOLID
04200.D1	* CMU LINTEL - RE: STRUCTURAL
05500.A2	* L (SIZE) - PAINTED
07901.A0	* SEALANT
08111.A1*	* GROUT FILLED PRESSED METAL FRAME
08111.B0	* HOLLOW METAL DOOR
08111.C0	* JAMB ANCHOR
08360.A0	* OVERHEAD SECTIONAL DOOR
08360.B0	* DOOR TRACK
08360.C0	* WEATHERSTRIPPING
08800.C0	*WIRE GLASS
08800.G1	*CLEAR INSULATING GLASS (SIZE)
08800.G2	*1/4" CLEAR TEMPERED GLASS
08800.G3	*TRANSLUCENT INSULATING GLASS
08950.A0	* TRANSLUCENT WALL PANEL
09255.A1	* GYPSUM BOARD (THICKNESS)
09255.H0	* METAL STUD
12511.A0	* HORIZONTAL LOUVERED BLINDS

NOTES - GENERAL

1. PROVIDE HORIZONTAL LOUVER BLINDS

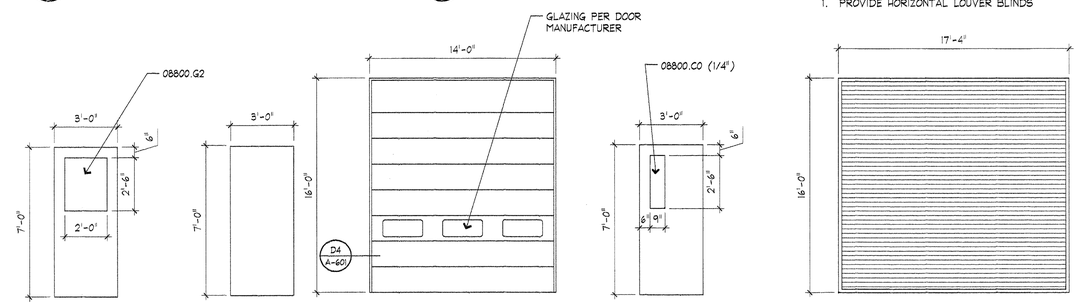

TYPE 1 TYPE 2 TYPE 3 TYPE 4 TYPE 5

C4 DOOR TYPES

SCALE: NTS

ROOM FINISH SCHEDULE

ROOM	ROOM NAME	FLOOR MATERIAL	BASE MATERIAL	BASE HEIGHT	WALLS N	WALLS E	WALLS S	WALLS W	WALLS FINISH	CEILING MATERIAL	CEILING FINISH	CEILING HEIGHT	REMARKS
101	OFFICE	2	1	4"	2	2	2	1	PAINTED	1	PAINTED	8'-0"	LIGHT GRAY
102	TRAINING ROOM	2	1	4"	2	2	2	1	PAINTED	1	PAINTED	8'-0"	LT. GRAY
103	REST RM.	3	2	4"	2/3	2/3	2/3	2/3	EPOXY PNT.	1	PAINTED	8'-0"	LT. GRAY 2/3=C.T. WAINSCOT 4'-0"
104	MECHANICAL ROOM	1	-		1	2	1	1	PAINTED	2	-	-	LT. GRAY
105	VESTIBULE	4	1	4"	1	2	2	-	PAINTED	1	PAINTED	8'-0"	LT. GRAY
106	STORAGE ROOM	1	-		2	2	1	1	PAINTED	1	PAINTED	8'-0"	LT. GRAY
107	MAINTENANCE BAY	4	3	4'-0"	1	1	-	-	-	2	-	-	
108	STORAGE	4	3	4'-0"	-	1	1	1	-	2	-	-	
109	VEHICLE STO. BAYS	4	3	4'-0"	1	1	1	1	-	2	-	-	
110	ENCLOSED STO. BAY	1	-		1	1	1	1	-	2	-	-	
111	OPEN STO. BAYS	1	-		1	1	1	1	-	2	-	-	
SALT STORAGE		ASPHALT	-	10'-0"	-	-	-	-	SEE REMARKS	2	-	-	EPOXY SYSTEM

ROOM FINISH LEGEND

FLOOR	BASE	WALLS/WAINSCOT	CEILING
1. SEALED CONCRETE	1. RUBBER BASE	1. CONCRETE MASONRY UNITS	1. GYPSUM BOARD, PAINTED
2. VINYL COMPOSITE TILE	2. CERAMIC TILE	2. GYPSUM BOARD	2. EXPOSED STRUCTURE
3. CERAMIC TILE	3. WATER REPELLANT	3. CERAMIC TILE	
4. EPOXY SYSTEM		4. ALUMINUM CLAD WALL PNL	

WINDOW LEGEND

IG-1	=	SEE SPECIFICATIONS
IG-2	=	" "
IG-3	=	" "
IG-4	=	" "

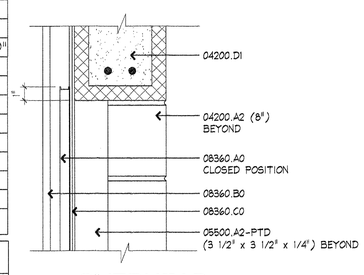

B3 OVERHEAD DOOR DETAIL

SCALE: NTS

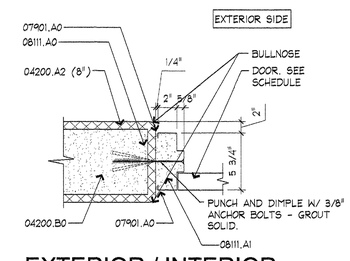

B4 EXTERIOR / INTERIOR JAMB DETAIL

SCALE: NTS

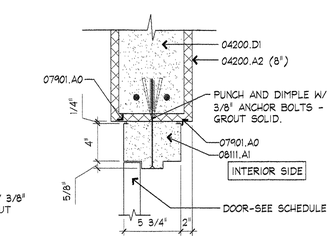

B5 EXTERIOR / INTERIOR HEAD DETAIL

SCALE: NTS

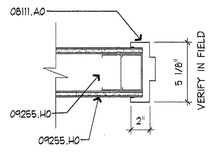

JAMB/HEAD SIMILAR

A1 DOOR FRAME DETAIL

SCALE: NTS

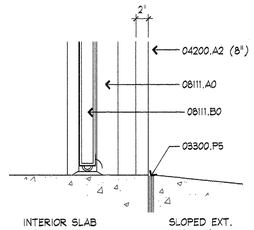

INTERIOR SLAB ON GRADE

SLOPED EXT. SLAB ON GRADE

A2 THRESHOLD DETAIL

SCALE: NTS

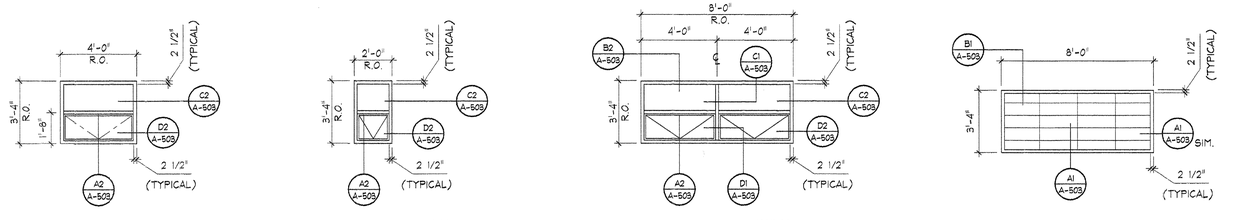

TYPE A1 08800.G1 — 12511.A0 NOTE-1

TYPE A2 08800.G3 — 12511.A0 NOTE-1

TYPE B 08800.G1 — 12511.A0 NOTE-1

TYPE C 08950.A0

A4 WINDOW FRAME TYPES

SCALE: 1/8" = 1'-0"

Utah Department of Transportation
Maintenance Facility

ISSUE

Schedules & Details

A-601

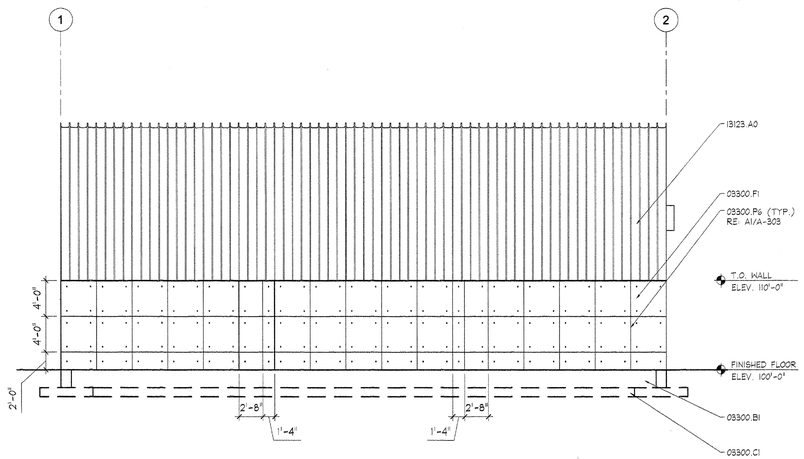

C1 ELEVATION

SCALE: 1/8" = 1'-0"

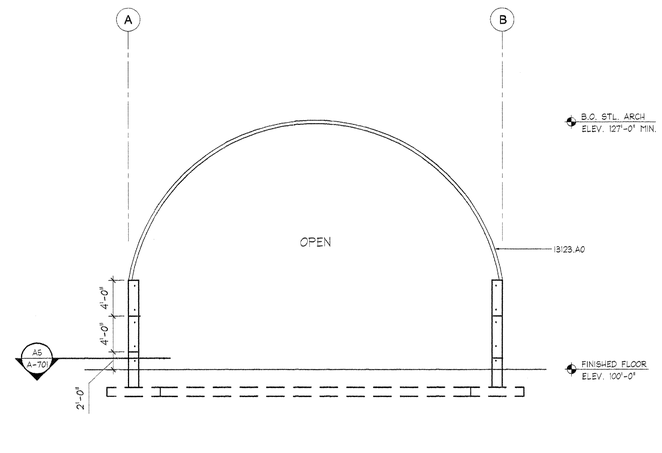

C3 ELEVATION

SCALE: 1/8" = 1'-0"

KEYNOTES

02511.A0	* ASPHALTIC CONCRETE PAVING ZERO VOIDS MIX (THICKNESS)
03300.A1	* CONCRETE SLAB-ON-GRADE. RE: STRUCTURAL
03300.B1	* FOUNDATION. RE: STRUCTURAL
03300.C1	* FOOTING. RE: STRUCTURAL
03300.F1	* CAST-IN-PLACE REINFORCED CONC. ARCHITECTURAL FINISH
03300.P5	* CHAMFER JOINT
05500.J1	* PIPE BOLLARD (DIA.), GALV. & PAINTED
13123.A0	* METAL ARCH BUILDING SYSTEM
15887.A2	* LOUVER WITH BIRD SCREEN
16510.A2	* EXTERIOR LIGHTS

NOTES GENERAL

1. FRAMED OPENGS BY METAL ARCH BLDG. SYSTEM SUPPLIER

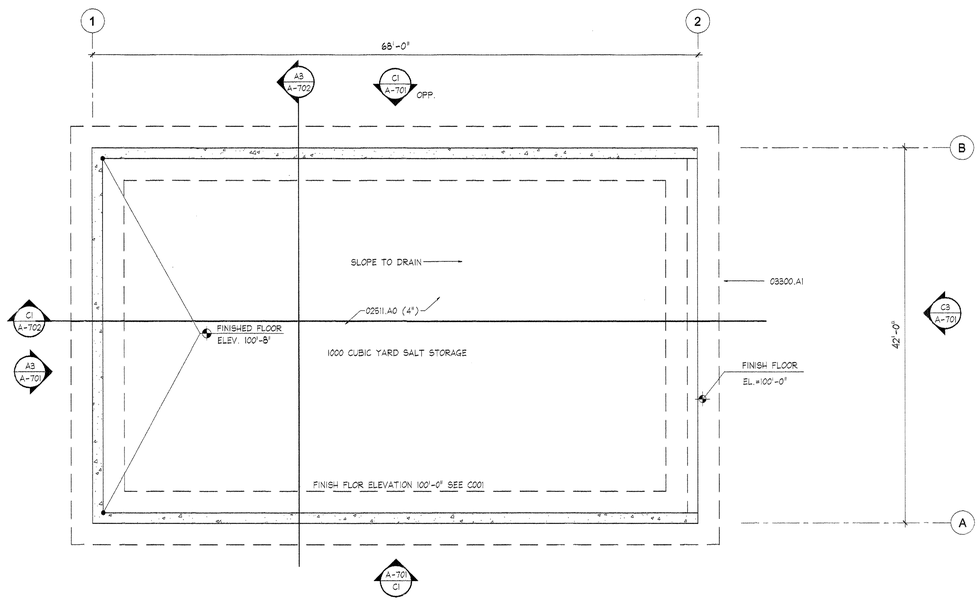

A1 SALT STORAGE FLOOR PLAN

SCALE: 1/8" = 1'-0"

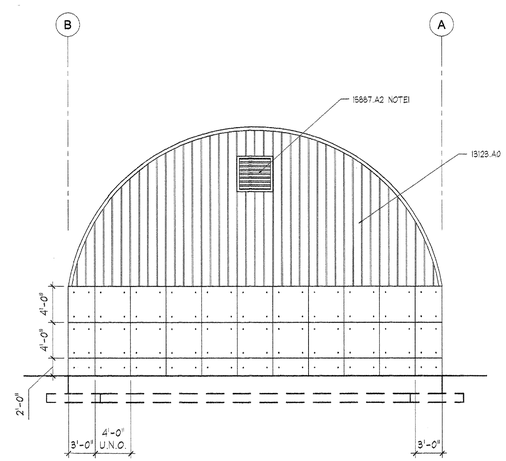

A3 ELEVATION

SCALE: 1/8" = 1'-0"

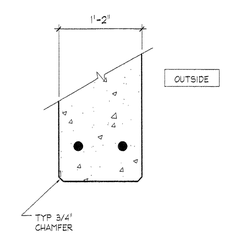

A5 JAMB DETAIL

SCALE: 1" = 1'-0"

Utah Department of Transportation
Maintenance Facility

ISSUE

Salt Storage
Plan &
Elevations

A-701

KEYNOTES

02511.A0*ASPHALTIC CONCRETE PAVING ZERO VOIDS MIX (THICKNESS)
03300.A1*CONCRETE SLAB-ON-GRADE, RE: STRUCTURAL
03300.B1*FOUNDATION, RE: STRUCTURAL
03300.C1*FOOTING, RE: STRUCTURAL
03300.F1*CAST-IN-PLACE REINFORCED CONC. ARCHITECTURAL FINISH
03300.P5*CHAMFER JOINT
05500.J1*PIPE BOLLARD (DIAMETER) GALV. AND PAINTED
08111.B0*HOLLOW METAL DOOR
08331.A0*OVERHEAD COILING DOOR
13123.A0*METAL ARCH BUILDING SYSTEM
15887.A2*LOUVER WITH BIRD SCREEN
16510.A2*EXTERIOR LIGHTS

NOTES GENERAL

1. FRAMED OPENGS BY METAL ARCH BLDG. SYSTEM SUPPLIER.

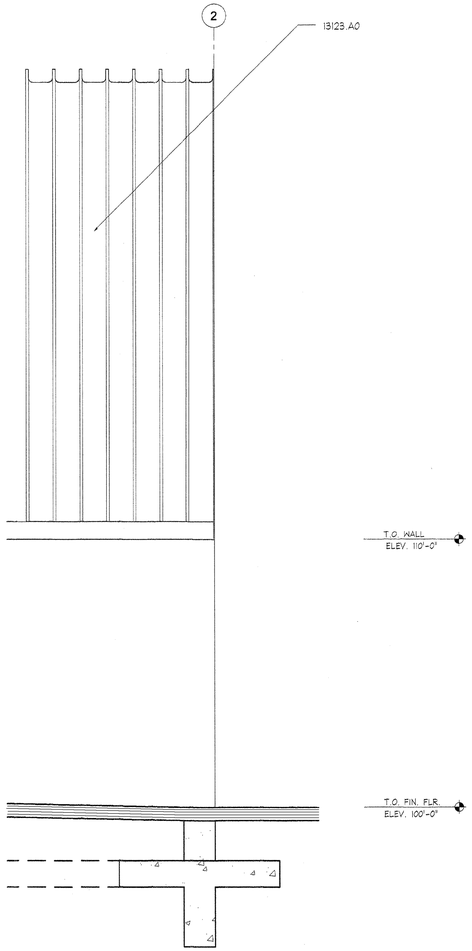

B1 WALL SECTION
SCALE: 3/8" = 1'-0"

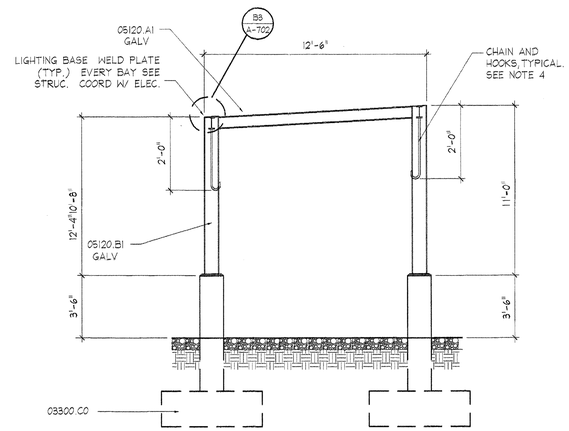

B3 SANDER RACK WALL SECTION
SCALE: 1/8" = 1'-0"

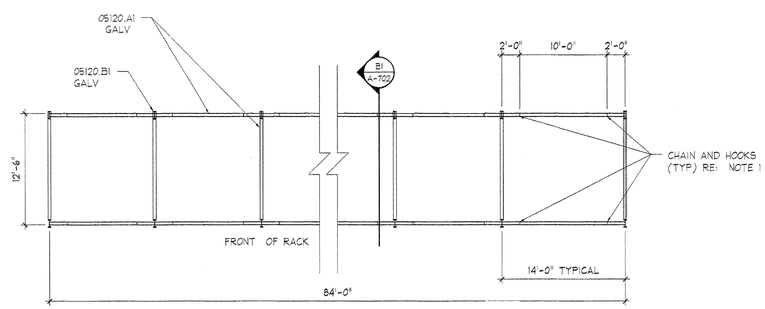

B4 SANDER RACK PLAN
SCALE: 1/8" = 1'-0"

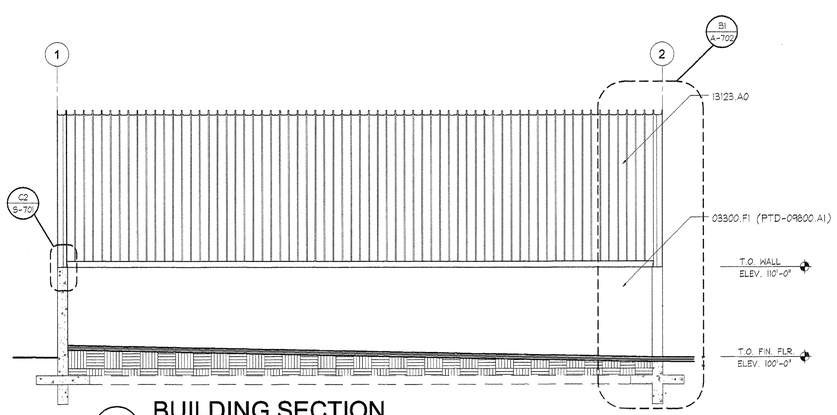

A1 BUILDING SECTION
SCALE: 1/8" = 1'-0"

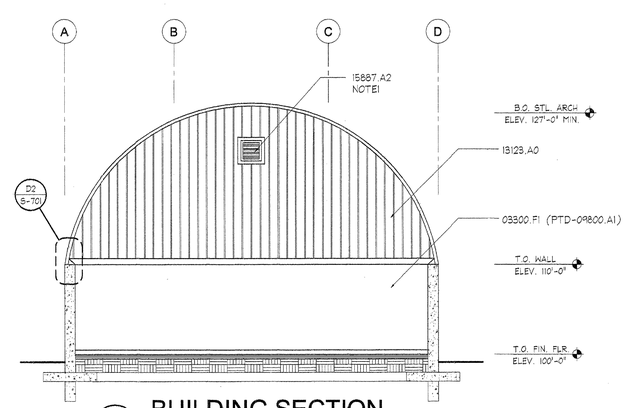

A3 BUILDING SECTION
SCALE: 1/8" = 1'-0"

Utah Department of Transportation
Maintenance Facility

ISSUE

Salt Storage
& Sander Rack

A-702

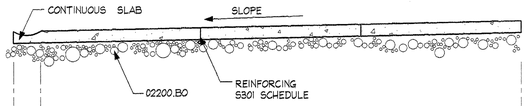

D1 SLAB SECTION

SCALE: 1/4" = 1'-0"

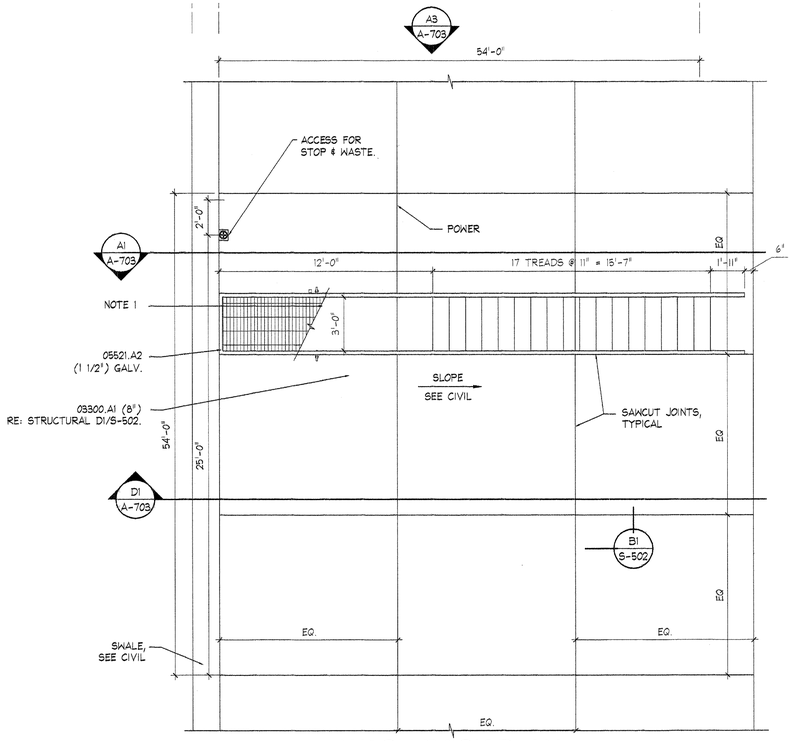

B1 WASH RACK PLAN

1/4" = 1'-0"

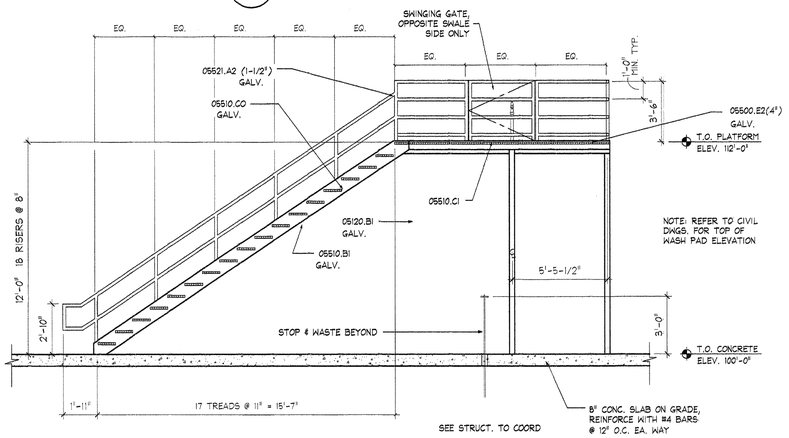

A1 WASH RACK SECTION

1/4" = 1'-0"

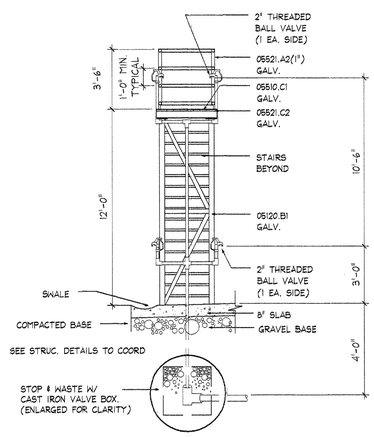

A3 WASH RACK ELEVATION

1/4" = 1'-0"

KEYNOTES

02200.B0	* GRAVEL BASE
03300.A1	* CONCRETE SLAB-ON-GRADE - RE: STRUCTURAL
05120.B1	* COLUMN, GALVANIZED - RE: STRUCTURAL
05500.A2	* L (SIZE) GALVANIZED
05500.E2	* PLATE (SIZE) GALVANIZED
05500.P1	* ANCHOR BOLT (ø, SPACING)
05510.B1	* STRINGER (SIZE)
05510.C0	* METAL GRATE TREAD, GALVANIZED
05510.C1	* METAL GRATE PANEL, GALVANIZED
05521.A2	* PIPE HANDRAIL (DIAMETER) - GALVANIZED & PAINTED

NOTES GENERAL

1. STOP AND DRAIN VALVE. SIMILAR TO MARK II ORISEAL. BURY VALVE IN 3/4" CRUSHED, WASHED ROCK. MIN. ROCK AREA SHALL BE 6'X6'X36" DEEP. CRUSHED ROCK SHALL START AT 12" ABOVE VALVE AND EXTEND DOWN 36". PROVIDE VALVE KEY WITH STEM LENGTH AS REQUIRED TO REACH VALVE. INSTALL SLEEVE & SLEEVE CAP TO PROVIDE ACCESS TO VALVE. INSTAL PER MANUF. RECOMMENDATION. CAP TO BE FLUSH W/CONC. FLOOR AND HEAVY DUTY.

Utah Department of Transportation
Maintenance Facility

ISSUE

Wash Rack
& Details

A-703

STRUCTURAL NOTES

GENERAL

1 ALL DESIGN, CONSTRUCTION, AND INSPECTION SHALL BE IN CONFORMANCE WITH THE LATEST EDITION OF THE IBC (2000).

2 THE CONTRACTOR SHALL VERIFY ALL DIMENSIONS AND CONDITIONS AT THE SITE.

3 ALL OMISSIONS OR CONFLICTS BETWEEN THE VARIOUS ELEMENTS OF THE WORKING DRAWINGS AND/OR SPECIFICATIONS SHALL BE BROUGHT TO THE ATTENTION OF THE ARCHITECT AND/OR STRUCTURAL ENGINEER BEFORE PROCEEDING WITH ANY WORK INVOLVED.

4 CONTRACTOR SHALL BE RESPONSIBLE FOR SAFETY AND PROTECTION WITHIN AND ADJACENT TO THE JOB SITE.

5 TEMPORARY SHORING AND BRACING SHALL BE PROVIDED WHEREVER NECESSARY TO TAKE CARE OF ALL LOADS TO WHICH THE STRUCTURE MAY BE SUBJECTED INCLUDING WIND. SUCH BRACING SHALL BE LEFT IN PLACE AS LONG AS MAY BE REQUIRED FOR SAFETY OR UNTIL ALL THE STRUCTURAL ELEMENTS ARE COMPLETE.

6 DURING AND AFTER CONSTRUCTION THE CONTRACTOR AND/OR OWNER SHALL KEEP LOADS ON THE STRUCTURE WITHIN THE LIMITS OF THE DESIGN LOADS.

7 THE GENERAL CONTRACTOR SHALL HAVE SHOP DRAWINGS REVIEWED BY THE ARCHITECT PRIOR TO THE FABRICATION OR ERECTION FOR THE FOLLOWING ITEMS: REINFORCING STEEL, STRUCTURAL STEEL, MISCELLANEOUS METALS, AND PREFABRICATED METAL JOISTS.

8 ALL DETAILS, SECTIONS, AND NOTES ARE INTENDED TO BE TYPICAL AND SHALL APPLY TO SIMILAR SITUATIONS UNLESS NOTED OR SHOWN OTHERWISE.

9 REFER TO THE SPECIFICATIONS FOR ADDITIONAL INFORMATION NOT COVERED ON THE DRAWINGS.

10 OBSERVATION VISITS TO THE JOB SITE BY FIELD REPRESENTATIVES OF CALDER-KANKAINEN SHALL NEITHER BE CONSTRUED AS INSPECTION NOR APPROVAL OF CONSTRUCTION.

11 SIZES, LOCATIONS, AND ANCHORAGES OF EQUIPMENT SHALL BE VERIFIED IN THE FIELD WITH EQUIPMENT MANUFACTURERS (SUPPLIERS) PRIOR TO PLACING CONCRETE OR FABRICATING STEEL.

FOOTINGS

1 ALL WALL AND COLUMN FOOTINGS DESIGNATED F_ FOR THE PRIMARY MAINTENANCE BUILDING SHALL BEAR ON COMPACTED STRUCTURAL FILL EXTENDING A MINIMUM OF FOUR FEET (4 ft.) BELOW THE BOTTOM OF FOOTING. STRUCTURAL FILL SHALL NOT BE PLACED ON OR ABOVE THE DARK BROWN TO BLACK TOPSOIL IDENTIFIED IN THE JULY 6, 1984 GEOTECHNICAL REPORT PREPARED BY CHEN AND ASSOCIATES.

2 FOOTINGS AND FOUNDATIONS FOR SALT STORAGE AND SANDER RACKS MAY BE PLACED ON COMPACTED NATIVE FILL PER THE GEOTECHNICAL REPORT PROVIDED THE FILL MATERIAL BENEATH THE FOOTING CONSISTS OF SAND AND GRAVEL AND IS FREE OF WOOD, METAL AND OTHER NON-SOIL MATERIALS AS IDENTIFIED IN THE GEOTECHNICAL REPORT.

3 SLAB AND SHOVEL FOOTINGS UNDER NON-BEARING WALLS MAY BE PLACED ON COMPACTED EXISTING FULL MATERIAL PROVIDED DELETERIOUS MATERIAL IS REMOVED. A MIN. 4" LAYER OF FREE DRAINING GRAVEL SHALL BE PLACED BENEATH CONCRETE FLOOR AND APRON SLABS.

4 COMPACTED STRUCTURAL FILL SHALL EXTEND AT LEAST TWO FEET (2 ft.) IN ALL DIRECTIONS BEYOND THE LIMITS OF THE CONCRETE FOOTING OR FOUNDATIONS BEING SUPPORTED.

5 IMPORTED FILL SHALL BE COMPACTED IN 6" LIFTS. THE TOP 8" OF NATURAL FILL SHALL BE COMPACTED TO THE REQUIRED PROCTOR DENSITY.

6 ENGINEERED OR NATIVE FILL SHALL BE COMPACTED TO 95% OF MAXIMUM RELATIVE DENSITY BASED ON ASTM D698 (STANDARD PROCTOR).

7 FOOTING ELEVATIONS SHOWN ON PLAN ARE TOP OF FOOTINGS AND ARE MINIMUM DEPTH. DIFFERENT OR UNUSUAL CONDITIONS SHALL BE REPORTED TO THE ARCHITECT AND/OR ENGINEER.

8 EXTERIOR WALL FOOTINGS SHALL BEAR AT A MINIMUM DEPTH OF 2'-6" BELOW FINISHED EXTERIOR GRADE.

9 NO FOOTINGS SHALL BE PLACED IN WATER OR ON FROZEN GROUND.

10 ANY SOIL CONDITION ENCOUNTERED DURING EXCAVATION THAT IS CONTRARY TO THE CONDITIONS USED FOR DESIGN OF FOOTINGS AS OUTLINED IN THE SOILS REPORT ON THE DRAWINGS SHALL BE BROUGHT TO THE ATTENTION OF THE ARCHITECT BEFORE PROCEEDING.

11 IN FOOTINGS, UNLESS OTHERWISE SHOWN, PROVIDE CORNER BARS AT ALL EXTERIOR BUILDING CORNERS 10'-0" X 10'-0" IN TOP SAME AS HORIZONTAL REINFORCEMENT.

12 DO NOT BACK FILL BEHIND FOUNDATION WALLS UNTIL TOP AND BOTTOM SLABS HAVE BEEN POURED AND ATTAINED THEIR DESIGN STRENGTHS.

13 BACK FILL BOTH SIDES OF FOUNDATION WALLS AT SAME TIME TO PREVENT OVERTURNING.

14 WALL FOOTINGS, WHERE NOT SHOWN OTHERWISE, SHALL BE 12" THICK WITH A 8" SPREAD EACH SIDE OF WALL AND PROVIDE 1 #4 CONTINUOUS AT BOTTOM FOR EACH 8" OF FOOTING WIDTH.

15 WHERE 6" DIAMETER OR LARGER PIPE PASSES THROUGH AN INTERIOR OR EXTERIOR FOUNDATION WALL, STEP THE FOOTING DOWN TO PASS BELOW PIPE AND THEN STEP BACK UP TO INDICATED ELEVATION. PROVIDE PIPE SLEEVE THROUGH FOUNDATION WALL.

16 ALL FOOTING EXCAVATIONS SHALL BE EXAMINED BY THE GEOTECHNICAL ENGINEER OF RECORD FOR VERIFICATION OF ADEQUATE BEARING CONDITIONS BEFORE PLACING CONCRETE.

CONCRETE

1 CONCRETE SHALL ATTAIN THE FOLLOWING MINIMUM COMPRESSIVE STRENGTHS AT 28 DAYS:
FOOTINGS & FOUNDATION WALLS.....4000 PSI
INTERIOR SLABS ON GRADE .....4000 PSI
BEAMS, COLUMNS, ...4000 PSI
EXTERIOR FLAT WORK.....4000 PSI

2 A STATEMENT OF MIX DESIGN FOR ALL CONCRETE SHALL BE SUBMITTED TO AND REVIEWED BY THE STRUCTURAL ENGINEER PRIOR TO COMMENCING WORK.

3 ALL CONCRETE WORK SHALL BE PLACED, CURED, STRIPPED, AND PROTECTED AS DIRECTED BY THE SPECIFICATIONS AND ACI STANDARDS AND PRACTICES.

4 UNLESS NOTED OTHERWISE ON THE DRAWINGS, REINFORCE CONCRETE WALLS AS FOLLOWS:
8" WALL #4 @ 12" HOR., #4 @ 12" VERT..IN CENTER OF WALL
10" WALL #4 @ 10" HOR., #4 @ 14" VERT..IN CENTER OF WALL
12" WALL #4 @ 12" HOR., EACH FACE, #4 @12" VERTICAL EACH FACE.

5 DOWEL VERTICAL BARS 36 DIAMETERS INTO STRUCTURE ABOVE AND FOOTINGS BELOW. PROVIDE 90 DEGREE HOOK WHERE 36 DIAMETER IS NOT POSSIBLE. IN ADDITION, PROVIDE 2-#6 CONTINUOUS BARS TOP AND BOTTOM OF 6" AND 8" WALLS AND 2-#6 BARS TOP AND BOTTOM OF WALLS 10" OR THICKER.

6 BEFORE CONCRETE IS POURED CHECK WITH ALL TRADES TO ENSURE PROPER PLACEMENT OF ALL OPENINGS, SLEEVES, CURBS, CONDUITS, BOLTS, INSERTS, ETC. RELATIVE TO WORK.

7 ADD 2-#4 BARS MINIMUM AROUND ALL OPENINGS (UNLESS OTHERWISE NOTED) AND EXTEND 24" BEYOND CORNER OF OPENING.

8 WHERE OPENINGS LARGER THAN 16" IN ANY DIRECTION OCCUR IN WALLS OR SLABS, PROVIDE SAME SIZE ADDITIONAL, FULL LENGTH REINFORCING AT EACH SIDE OF OPENING EQUAL TO ½ THE NUMBER OF BARS INTERRUPTED BY THE OPENING, UNLESS PLANS SHOW OTHERWISE. BARS AT 4 X BAR DIAMETER.

CONCRETE (CONT'D)

9 ALL SLABS ON GRADE SHALL BE PLACED IN ALTERNATE PANELS WITH A MAXIMUM WIDTH OF 25' BETWEEN CONTROL OR CONSTRUCTION JOINTS; REFER TO TYPICAL DETAILS ON DRAWINGS. UNLESS OTHERWISE NOTED, SLABS ON GRADE SHALL BE 4" THICK AND SHALL BE REINFORCED WITH 6 x 6 - W1.4 x W1.4 WELDED WIRE FABRIC, OR #4 @ 18" o.c.

10 REFER TO DRAWINGS FOR TYPICAL CONSTRUCTION JOINT DETAILS. UNLESS NOTED IN DRAWINGS, ALL REINFORCEMENT SHALL BE CONTINUOUS THRU JOINTS AND EACH CONSTRUCTION JOINT SHALL BE KEYED.

11 WHERE EXTERIOR SLABS ON GRADE ABUT WALLS OR COLUMNS PROVIDE 3/8" PREFORMED EXPANSION JOINT WITH SEALANT.

12 WHERE INTERIOR MASONRY WALLS DO NOT BEAR ON A FOOTING PROVIDE A TYPICAL THICKENED SLAB (12" THICK X 16" WIDE) UNDER WALL. REINFORCE WITH 2- #4 CONTINUOUS. DOWEL WALL REINFORCING TO SLAB.

MASONRY (CMU AND ATLAS BRICK)

1 ALL MASONRY SHALL BE REINFORCED WITH BOTH HORIZONTAL AND VERTICAL REINFORCEMENT. ALL BLOCK CELLS OR BRICK CAVITIES WITH REINFORCEMENT SHALL BE GROUTED FULL USING CONCRETE 2000 PSI GROUT. CELLS SHALL BE ALIGNED TO PRESERVE UNOBSTRUCTED VERTICAL CAVITIES OF 2" x 3" MINIMUM.

2 CONCRETE FOR BLOCK FILL SHALL HAVE 3/8 INCH MAXIMUM SIZE COURSE AGGREGATE AND SUFFICIENT WATER SO THE CONCRETE WILL FLOW INTO THE BLOCK CELLS WITHOUT LEAVING VOIDS. WHERE BEAMS BEAR ON CONCRETE BLOCK WALLS. BLOCK CELLS SHALL BE FILLED WITH CONCRETE 1' -4" WIDE TO FOUNDATION AND REINFORCE WITH A #6 EACH CELL, UNLESS OTHERWISE SHOWN.

3 AN ADDITIONAL VERTICAL BAR (MATCHING WALL REINFORCEMENT) SHALL BE PLACED AT EACH CORNER, END OF WALL, AND JAMB OF ALL OPENINGS U.N.O.

4 HORIZONTAL BARS SHALL BE PLACED IN BOND BEAMS FILLED WITH GROUT AT THE TOP OF ALL WALLS AND AT 48" O.C. MAXIMUM BETWEEN TOP OF WALL AND FOUNDATION. BOND BEAM UNITS AND REINFORCING SHALL CONTINUE UNINTERRUPTED AROUND ALL CORNERS AND WALL INTERSECTIONS. WHERE STRUCTURAL STEEL COLUMNS OR BEAMS INTERRUPT THE CONTINUITY OF A BOND BEAM, DOWELS MATCHING BOND BEAM REINFORCEMENT SHALL BE WELDED TO THE STRUCTURAL STEEL TO PROVIDE CONTINUITY.

5 ALL VERTICAL REINFORCING BARS SHALL BE DOWELED TO STRUCTURE BELOW WITH BARS OF SAME SIZE AND SPACING. LAP ALL SPLICES IN MASONRY 48 BAR DIAMETERS. PLACE ALL BARS SECURELY PRIOR TO GROUTING.

6 MASONRY REINFORCEMENT: THE MINIMUM REINFORCEMENT FOR ALL MASONRY WALLS SHALL BE AS FOLLOWS:

8 IN. WALLS: #6 @ 32 IN. O.C. IN VERTICAL GROUTED CELLS
& 2-#4 @ 48 IN. O.C. IN BLOCK UNIT
HORIZONTALLY GROUTED.

7 IN ADDITION LADDER-TYPE REINFORCING CONSISTING OF #9 WIRE FOR EACH FACE SHELL OF EACH WYTHE SHALL BE USED AT 16 IN. O.C. HORIZONTALLY IN ALL MASONRY WALLS. REINFORCEMENT SHALL BE FOR TOTAL WIDTH OF CAVITY WALLS.

8 CONCRETE MASONRY UNITS SHALL BE GRADE N UNITS CONFORMING TO A.S.T.M. DESIGNATION C90 AND SHALL HAVE A MINIMUM ULTIMATE COMPRESSIVE STRENGTH OF 1900 PSI ON THE NET SECTION.

9 MORTAR SHALL BE TYPE "S" AND SHALL HAVE THE FOLLOWING PROPORTIONS BY VOLUMES:
PORTLAND CEMENT . . . . . 1 PART
HYDRATED LIME . . . . . 1/4 - ½ PART
DAMP. LOOSE AGGREGATE. . . NOT LESS THAN 2-1/4 & NOT MORE THAN (3) TIMES THE SUM OF CEMENT AND LIME USED.

10 STOP GROUT POURS 1/2" BELOW TOP OF BLOCK UNITS.

11 ALL ANCHOR BOLTS MUST BE PLACED IN GROUTED CELLS.

12 NO MASONRY SHALL BE LAID WHEN THE TEMPERATURE OF THE OUTSIDE AIR IS BELOW 40 DEG. F., UNLESS APPROVED METHODS ARE USED DURING CONSTRUCTION TO PREVENT DAMAGE TO THE MASONRY. SUCH METHODS SHALL INCLUDE PROTECTION OF THE MASONRY FOR A PERIOD OF AT LEAST 48 HOURS.

13 ALL REINFORCING SHALL BE IN PLACE PRIOR TO GROUTING. VERTICAL REINFORCING BARS SHALL BE HELD IN POSITION AT THE TOP, BOTTOM AND AT INTERVALS NOT FARTHER APART THAN 200 BAR DIAMETERS. PROVIDE WIRE TIES AT ALL LAP SPLICES.

14 UNLESS INDICATED OTHERWISE ON THE DRAWINGS OR IN THE SPECIFICATIONS, MASONRY GROUTING SHALL COMPLY WITH THE PROVISIONS OF IBC SECTION 2104.

15 ALL MASONRY WALLS SHALL HAVE VERTICAL CONTROL JOINTS AT: MAJOR CHANGES IN WALL HEIGHT, AT CHANGES IN WALL THICKNESS, AT BUILDING CONSTRUCTION JOINTS, AND NOT FARTHER APART THAN 40 FEET ELSEWHERE. PROVIDE MATCHING CONTROL JOINTS FOR BRICK VENEER. CONSULT ARCHITECTURAL DRAWINGS FOR LOCATIONS. VERTICAL CELLS EACH SIDE OF CONTROL JOINTS SHALL BE GROUTED AND REINFORCED WITH REBARS TO MATCH VERTICAL REINFORCEMENT USED THROUGHOUT THAT WALL. ONLY HORIZONTAL REBARS IN BOND BEAMS AT FLOORS AND AT ROOF LEVEL SHALL CONTINUE THROUGH CONTROL JOINTS. PROVIDE FULL HEIGHT HARD RUBBER KEY AT JOINT. WHERE JOINT LOCATIONS ARE NOT SHOWN ON THE DRAWINGS THE CONTRACTOR SHALL SUBMIT PROPOSED LOCATIONS TO ARCHITECT/ENGINEER FOR REVIEW.

REINFORCING STEEL

1 ALL REINFORCEMENT SHALL BE DETAILED AND PLACED IN ACCORDANCE WITH ACI DETAILING MANUAL 315-92 AND ACI STANDARD 318-95.

2 REINFORCING STEEL SHALL BE ASTM A615 GRADE 60.

3 WELDED WIRE FABRIC SHALL CONFORM TO ASTM A185. LAP ONE MESH TIE.

4 ALL REINFORCEMENT SHALL BE SECURELY TIED AND HELD IN PLACE.

5 REINFORCING BARS THAT ARE TO BE WELDED, INCLUDING DEFORMED BAR ANCHORS (D.B.A.) SHALL BE OF A WELDABLE GRADE AND SHALL BE WELDED IN ACCORDANCE WITH THE A.W.S. RECOMMENDATIONS.

6 ALL CONTINUOUS REINFORCEMENT SHALL TERMINATE WITH A 90 DEG. TURN OR A SEPARATE CORNER BAR. ALL SPLICES SHALL LAP A MINIMUM OF 36 BAR DIAMETERS (12" MINIMUM) IN CONCRETE, AND 48 DIAMETERS IN MASONRY.

7 WHERE THE LENGTH OF A BAR IS GIVEN AND IT IS TO BE HOOKED, THE HOOK SHALL BE IN ADDITION TO THE LENGTH GIVEN, UNLESS SHOWN OTHERWISE.

8 COVER TO MAIN REINFORCEMENT FROM ADJACENT SURFACES SHALL BE AS FOLLOWS UNLESS SHOWN OTHERWISE:
A. UNFORMED SURFACES IN CONTACT WITH GROUND OR EXPOSED TO THE WEATHER (BOTTOM OF FOOTINGS). . . . . 3 INCHES
B. SLABS ON GRADE . . . . . 2 INCHES
C. FORMED SURFACES IN CONTACT WITH THE GROUND OR EXPOSED TO THE WEATHER (GRADE BMS, WALLS, ETC.), BEAMS AND COLUMNS. . . . . 2 INCHES
D. STRUCTURAL SLABS AND JOISTS NOT EXPOSED TO WEATHER OR EARTH..... . . 1 INCH
E. INTERIOR WALL SURFACES. . . . . 1 INCH
F. INTERIOR BEAMS AND COLUMNS . . . . . 1-1/2 IN.
G. IN ALL CASES MINIMUM COVER SHALL NOT BE LESS THAN THE DIAMETER OF ADJACENT BARS.

9 PRIOR TO FABRICATION AND PLACEMENT, SHOP DRAWINGS FOR ALL REINFORCING STEEL SHALL BE REVIEWED BY THE STRUCTURAL ENGINEER.

STRUCTURAL STEEL

1 ALL STRUCTURAL STEEL AND STRUCTURAL STEEL WORK SHALL COMPLY WITH BOTH THE AISC "MANUAL OF STEEL CONSTRUCTION" CONTAINING THE SPECIFICATIONS FOR THE DESIGN, FABRICATION AND ERECTION OF STRUCTURAL STEEL BUILDINGS, INCLUDING THE "CODE OF STANDARD PRACTICES" (LATEST EDITION), AND WITH THE IBC 2000 EDITION.

2 ALL STRUCTURAL STEEL W SECTIONS SHALL BE ASTM A992.

3 USE A325 BOLTS FOR STEEL TO STEEL CONNECTIONS AND A307 BOLTS FOR ALL OTHER CONNECTIONS. USE 3/4" DIAMETER MINIMUM.

4 PRIOR TO FABRICATION AND ERECTION, SHOP DRAWINGS FOR ALL STEEL ITEMS SHALL BE REVIEWED BY THE STRUCTURAL ENGINEER. THE CONTRACTOR SHALL VERIFY ALL SHOP DRAWING DIMENSIONS WITH STRUCTURAL AND ARCHITECTURAL PLANS AND DETAILS.

5 ALL WELDS SHALL BE MADE WITH E70XX ELECTRODES AND BY WELDERS CERTIFIED BY AWS STANDARDS WITHIN THE PAST 12 MONTHS; PROVIDE WRITTEN CERTIFICATION IF REQUESTED.

6 ALL HIGH-STRENGTH BOLTS SHALL BE TIGHTENED TO THE APPROPRIATE MINIMUM BOLT TENSION IN ACCORDANCE WITH "AISC SPECIFICATIONS FOR STRUCTURAL JOINTS USING ASTM A325 OR A490 BOLTS." THE PREFERRED METHOD OF TIGHTENING IS BY USE OF A "DIRECT TENSION INDICATOR." THE TURN-OF-NUT METHOD MAY ALSO BE USED. PROVIDE CARBONIZED WASHERS UNDER THE TURNED ELEMENT.

7 STRUCTURAL STEEL TUBING SHALL CONFORM TO ASTM A500 GRADE B; YIELD STRESS = 46 KSI.

8 STRUCTURAL STEEL PLATES SHALL CONFORM TO ASTM A36.

9 ALL STEEL JOISTS, JOIST GIRDERS, AND ASSOCIATED WORK SHALL COMPLY WITH THE LATEST EDITION OF THE "STANDARD SPECIFICATIONS OF THE STEEL JOIST INSTITUTE." UNLESS SHOWN OTHERWISE, PROVIDE BRIDGING IN ACCORDANCE WITH THIS SPECIFICATION AS A MINIMUM. JOIST FABRICATOR SHALL BE A MEMBER OF THE STEEL JOIST INSTITUTE (SJI). JOISTS SHALL BE DESIGNED BY A PROFESSIONAL ENGINEER, REGISTERED IN THE STATE OF THE PROJECT AND HE SHALL SEAL AND SIGN ALL DESIGN CALCULATIONS AND JOISTS SHOP DRAWINGS. DESIGN SHALL COMPLY WITH ALL LOADING REQUIREMENTS INDICATED ON THE DRAWINGS AND NOTES. DESIGN CALCULATIONS AND SHOP DRAWINGS SHALL CLEARLY INDICATE ALL LOADINGS, DIMENSIONS, MEMBER FORCES, REACTIONS, MEMBER SIZES, WELD REQUIREMENTS AND JOINT DETAILS. JOISTS SHALL BE DESIGNED ASSUMING HORIZONTAL MOVEMENT IS ALLOWED AT ONE END, UNLESS NOTED OTHERWISE.

10 ALL BRIDGING SHALL BE SECURELY ANCHORED AT END OF EACH RUN. WELD TO STEEL BEAM OR ANCHOR TO MASONRY WALL WITH 3/8" ANCHOR BOLTS.

11 WHERE JOISTS CAN NOT BEAR 2 ½ INCHES ON STEEL BEAMS, STAGGER LOCATION OF JOISTS TO PROVIDE 2 ½ INCHES MINIMUM BEARING ON BEAM.

12 CONCENTRATED LOADS SHALL NOT BE PLACED ON NOR HUNG FROM JOISTS UNLESS THEY ARE PLACED AT PANEL POINTS OR A BRACE (L1-1/2x1-1/2X1/8) IS INSTALLED BETWEEN THE LOAD AND PANEL POINT. CONCENTRATED LOADS NOT SHOWN ON THE DRAWINGS SHALL BE BROUGHT TO THE ATTENTION OF THE ARCHITECT/ENGINEER FOR REVIEW.

13 SPECIAL INSPECTIONS AND TESTING OF WELDS AS REQUIRED BY IBC 2000 SHALL BE PROVIDED BY THE OWNER.

14 ALL BEAM CONNECTIONS, NOT SHOWN TO BE MOMENT CONNECTIONS AND NOT DETAILED OTHERWISE SHALL BE MADE USING AISC 7TH EDITION TABLE I "FRAMED BEAM CONNECTIONS" WITH THE MAXIMUM NUMBER OF ROWS SHOWN FOR THAT BEAM.

15 UNLESS NOTED OTHERWISE, BEAMS SUPPORTING FLOOR SYSTEMS SHALL BE CAMBERED 1/4 INCHES PER 10 FEET OF SPAN.

16 UNLESS SHOWN OTHERWISE PROVIDE ½ X 7 1/2" X 12" BEARING PLATES ON 1 INCH GROUT WITH 2-3/4" DIAMETER ANCHOR BOLTS UNDER ALL STEEL BEAMS THAT BEAR ON MASONRY WALLS.

SPECIAL INSPECTIONS

1 NO SPECIAL INSPECTION OF CONCRETE FOOTINGS AND FOUNDATIONS IS REQUIRED PER IBC SECT. 1704.4 EXCEPTIONS.

2 SPECIAL INSPECTION OF MASONRY IS REQUIRED PER TABLE 1704.04.5.1 IBC 2000.

3 SPECIAL INSPECTION OF CONCRETE REINFORCING STEEL IS REQUIRED PER TABLE 1704.4 OF IBC 2000.

4 INSPECTION OF BOLTS AND EMBEDS WITH HEADED STUDS INSTALLED IN CONCRETE IS REQUIRED PER TABLE 1704.4 IBC 2000.

STRUCTURAL DESIGN LOADS

SEISMIC: SDC = D SITE CLASS "E"
I = 1.0 R = PER APPLICABLE ELEMENT

WIND: BASIC WIND SPEED = 70 MPH, qs = 15 psf, EXPOSURE "C".
= IBC 3 SECOND GUST @ 90 MPH.

SOILS: NET ALLOWABLE SOIL PRESSURE = 1500 PSF, PER SOILS REPORT

ROOF: DL = 19 PSF. SL = 30 PSF

Utah Department of Transportation
Maintenance Facility

ISSUE

GENERAL STRUCTURAL NOTES

S-001

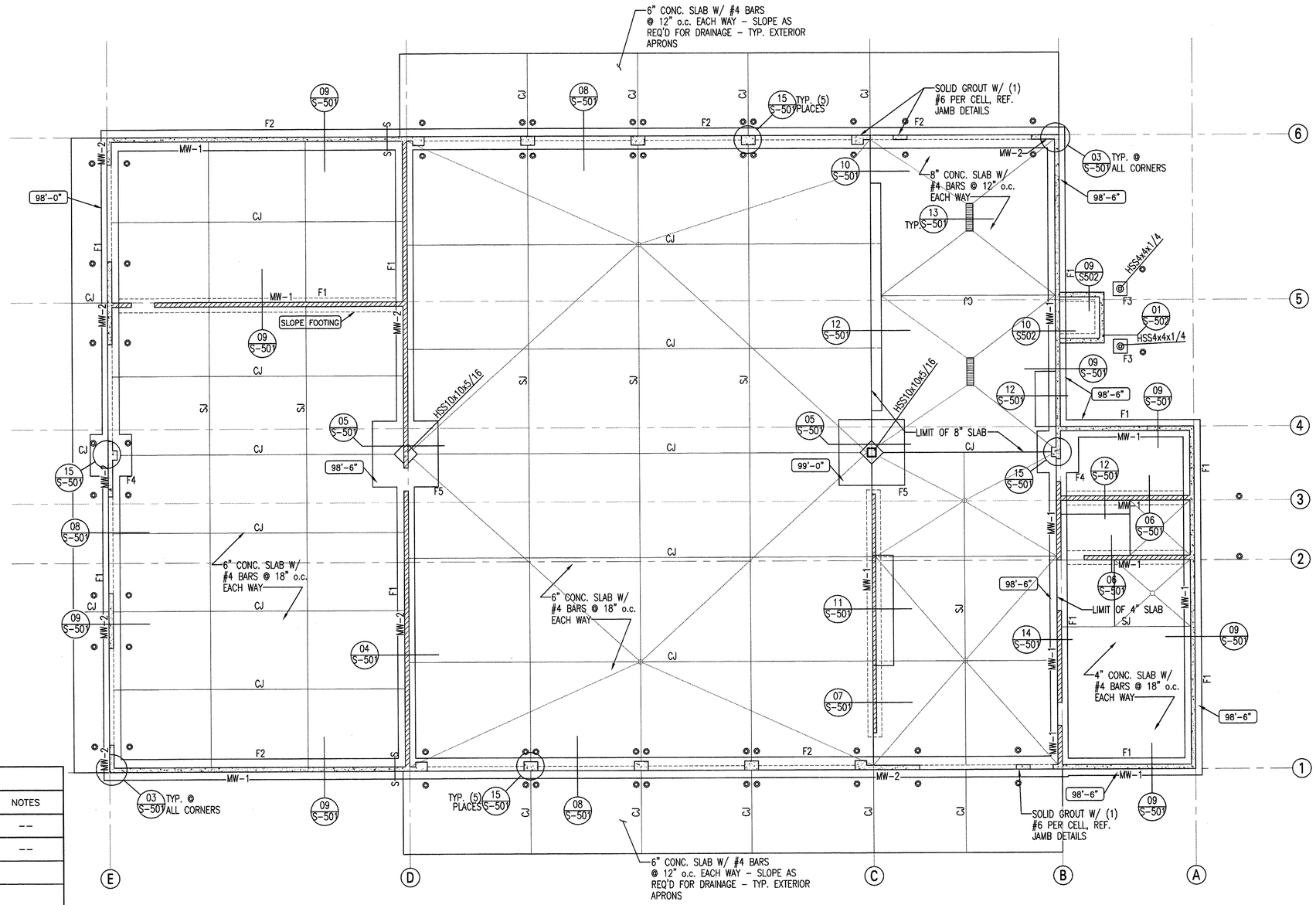

MASONRY WALL SCHEDULE

MARK	THICK	VERTICAL REINF. NO.	VERTICAL REINF. SIZE	VERTICAL REINF. SPA.	HORIZONTAL REINF. NO.	HORIZONTAL REINF. SIZE	HORIZONTAL REINF. SPA.	GROUT	NOTES
MW-1	8"	--	#6	32"	(2)	#4	48"	--	--
MW-2	8"	--	#6	24"	(2)	#4	48"	--	--

FOOTING SCHEDULE

MARK	WIDTH	LENGTH	THICK	CROSSWISE REINF. NO.	CROSSWISE REINF. SIZE	CROSSWISE REINF. LENGTH	CROSSWISE REINF. SPA.	LENGTHWISE REINF. NO.	LENGTHWISE REINF. SIZE	LENGTHWISE REINF. LENGTH	LENGTHWISE REINF. SPA.	NOTES
F1	2'-6"	CONT.	12"	--	#4	2'-0"	12"	(3)	#4	CONT.	--	--
F2	3'-0"	CONT.	12"	--	#4	2'-6"	12"	(4)	#4	CONT.	--	--
F3	2'-0"	2'-0"	12"	(3)	#4	1'-6"	EQ.	(3)	#4	1'-6"	EQ.	--
F4	6'-0"	6'-0"	12"	(7)	#4	5'-6"	EQ.	(7)	#4	5'-6"	EQ.	--
F5	9'-6"	9'-6"	15"	(10)	#6	8'-6"	EQ.	(10)	#6	8'-6"	EQ.	--
F6	4'-6"	4'-6"	12"	(5)	#4	4'-0"	EQ.	(5)	#4	4'-0"	EQ.	--

LEGEND

F1	DENOTES CONCRETE FOOTING BELOW, SEE SCHEDULE ON THIS SHEET.
CJ	DENOTES CONTROL JOINT, SEE DETAIL 01/S-005.
SJ	DENOTES SAW JOINT, SEE DETAIL 01/S-005.
s——s	DENOTES FOOTING STEP, SEE DETAIL 04/S-005.
	DENOTES NEW CONCRETE WALL.
	DENOTES NEW MASONRY WALL
0'-0"	DENOTES TOP OF CONCRETE FOOTING ELEVATION (BASED ON F.F. = 100'-0")
MW-_	DENOTES MASONRY WALL TYPE.
◎	DENOTES BOLLARD – SEE ARCH FOR LOCATION AND FOUNDATION.

FOOTING / FOUNDATION PLAN

SCALE: 1/8"=1'-0"

NORTH

PLAN NOTES

◯ CIRCLED NOTES ARE KEYED TO PLAN

1 SEE SHEET S-001 FOR STRUCTURAL NOTES.
2 SEE DETAIL 08/S-006 FOR TYPICAL JAMB AND CONTROL JOINT REINF.
3 ALL SLABS TO BE PLACED ON MIN. 4" GRAVEL BASE
4 SEE ARCH, CIVIL, AND MECHANICAL PLANS FOR SLAB DRAINAGE.

Utah Department of Transportation
Maintenance Facility

ISSUE

Footing and slab plan

S-101

MASONRY BEAM SCHEDULE

MARK	SPAN	WIDTH	DEPTH	REINFORCEMENT		
				HORIZONTAL	VERTICAL	NOTES
MB-1	0' - 4'	8"	16"	(2) #4	TYP. WALL	#4 TOP & BOTT. HOOK VERT'S 180°
MB-2	14'-0"	SEE NOTE	SEE NOTE	SEE NOTE	SEE NOTE	SEE DETAIL 11/S-502
MB-3	4' - 8'	8"	24"	(4) #4	TYP. WALL	(2) #4 TOP & BOTT. HOOK VERT'S 180°
MB-4	14'-0"	SEE NOTE	SEE NOTE	SEE NOTE	SEE NOTE	SEE DETAIL 11/S-504

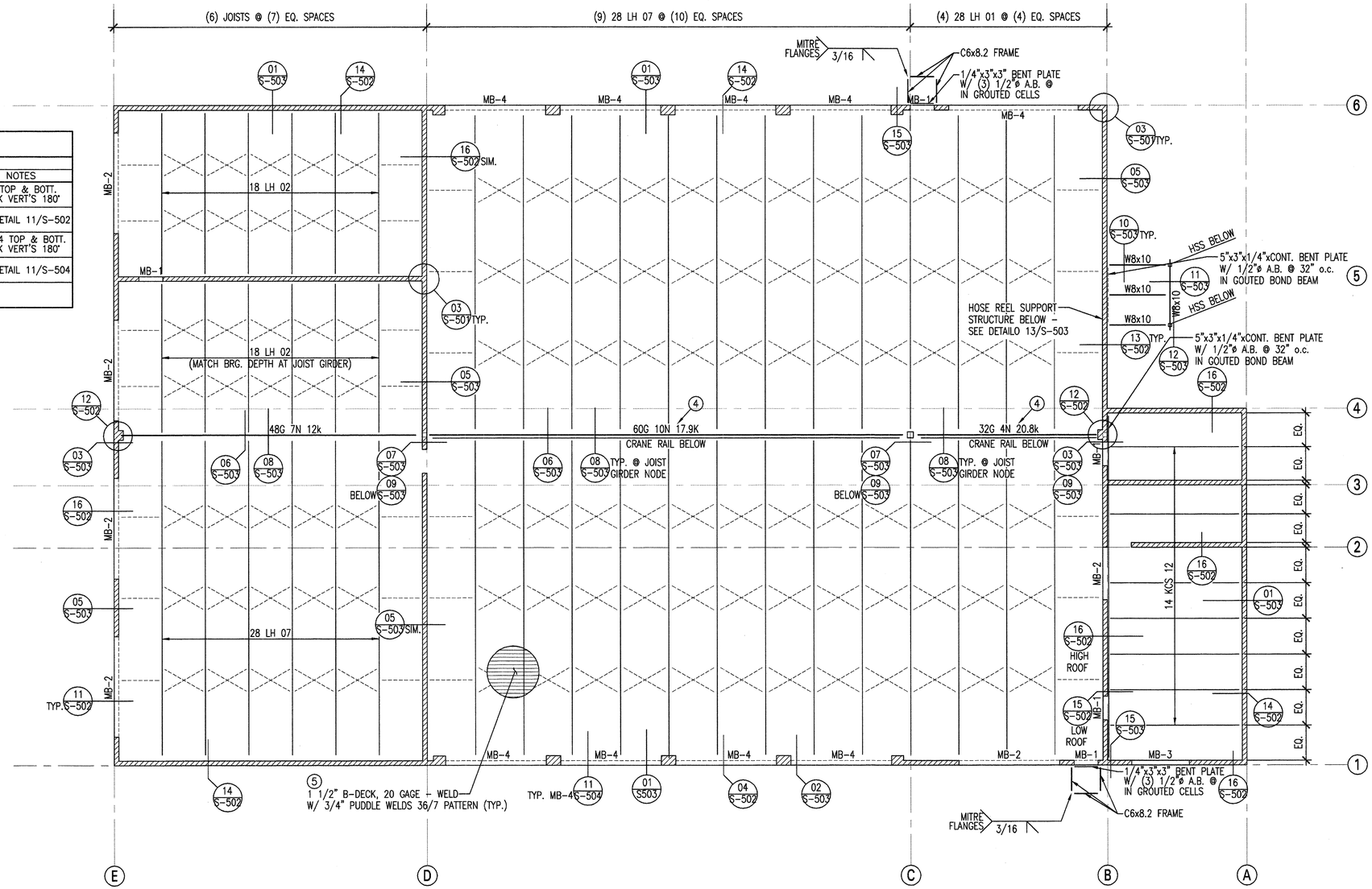

LEGEND

MB-_ DENOTES MASONRY BEAM TYPE.
DENOTES HORIZONTAL JOIST BRIDGING.
DENOTES DIAGONAL JOIST BRIDGING.

ROOF FRAMING PLAN

SCALE: 1/8"=1'-0"

NORTH

PLAN NOTES

(◯) CIRCLED NOTES ARE KEYED TO PLAN
1 SEE SHEET S1 FOR STRUCTURAL NOTES.
2 SEE DETAIL FOR TYPICAL JAMB AND CONTROL JOINT REINF.
3 SEE MASONRY BEAM SCHEDULE FOR MASONRY BEAMS NOT INDICATED ON THE PLAN.
(4) JOIST GIRDER SIZE OBTAINED BE PLACING MAX CRANE LOAD OF 10k @ MID SPAN OF GIRDER, DETERMINING MAX MOMENT, AND CALCULATING THE PER NODE LOADING THAT GIVES THE SAME MAXIMUM MOMENT. GIRDER MANUFACTURER TO VERIFY SIZE IS ADEQUATE.
(5) SEE DETAIL 15/S-503 FOR TYPICAL ROOF OPENING DETAIL.

Utah Department of Transportation
Maintenance Facility

ISSUE

ROOF FRAMING PLAN

S-102

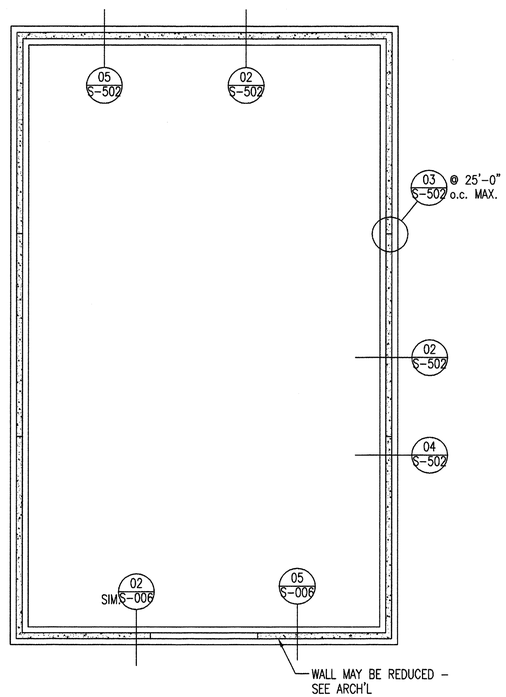

SALT STORAGE FOOTING PLAN

SCALE: 1/8"=1'-0"

NORTH

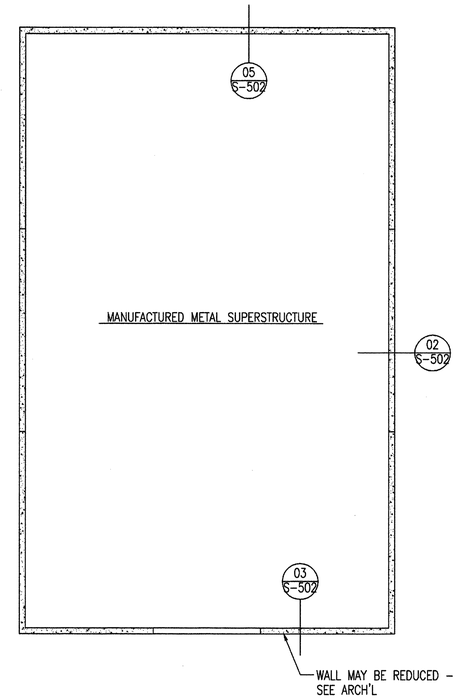

SALT STORAGE FRAMING PLAN

SCALE: 1/8"=1'-0"

NORTH

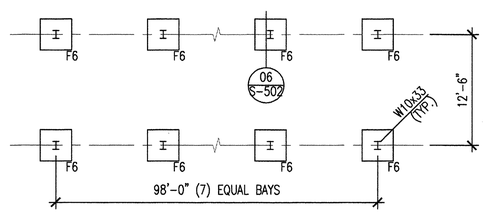

SANDER RACK FOOTING PLAN

SCALE: 1/8"=1'-0"

NORTH

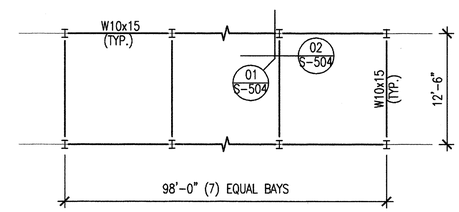

SANDER RACK FRAMING PLAN

SCALE: 1/8"=1'-0"

NORTH

NOTE:
SEE SHEET S-504 FOR WASH RACK.

Utah Department of Transportation
Maintenance Facility

ISSUE

Salt Storage and Sander Rack Plans

S-103

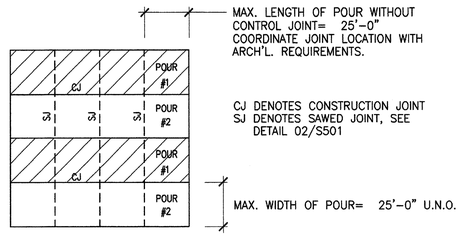

SLAB CONTROL JOINT CRITERIA U.N.O.

NOT USED 01

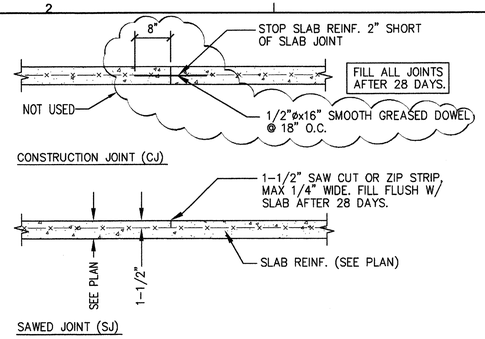

TYPICAL SLAB JOINT DETAILS

DETAIL 02

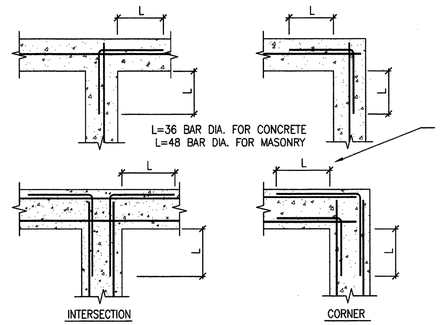

WALL INTERSECTION DOWELS

DETAIL 03

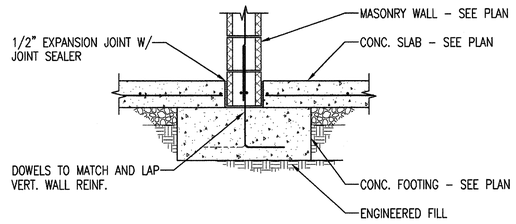

NOT USED 04

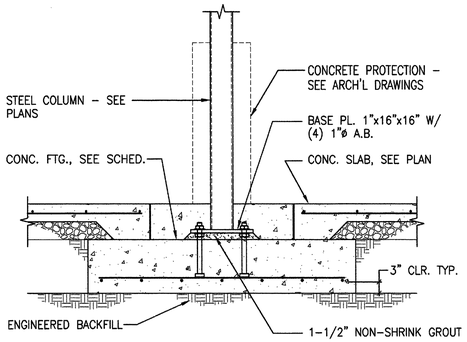

DETAIL 05

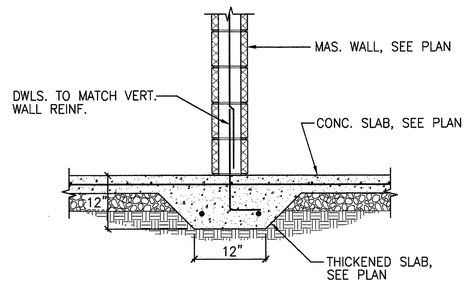

DETAIL 06

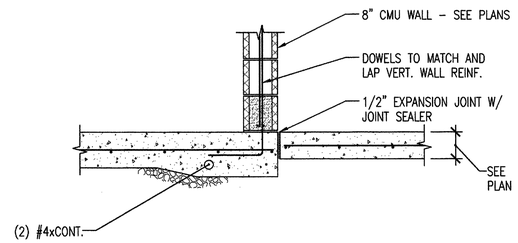

DETAIL 07

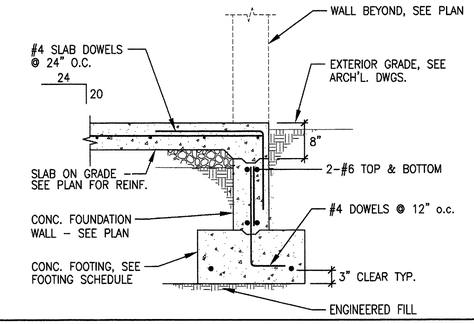

DETAIL 08

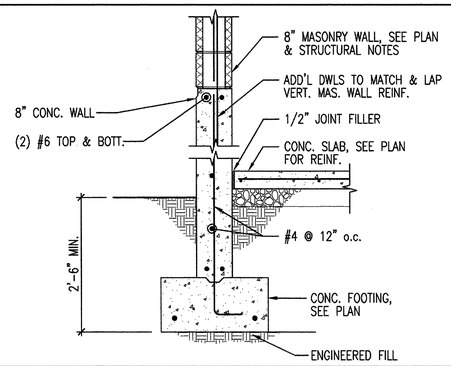

DETAIL 09

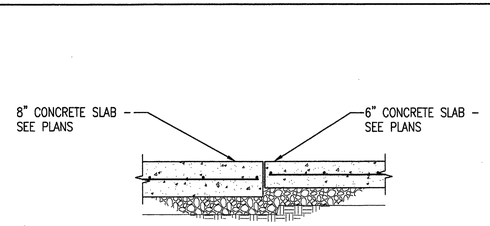

DETAIL 10

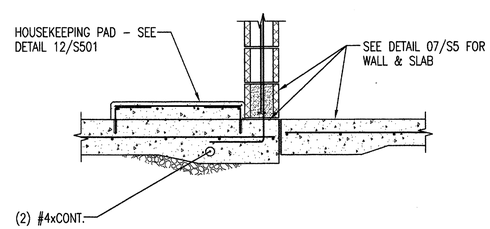

DETAIL 11

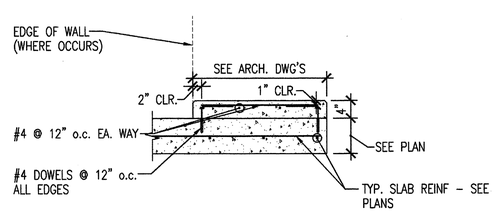

DETAIL 12

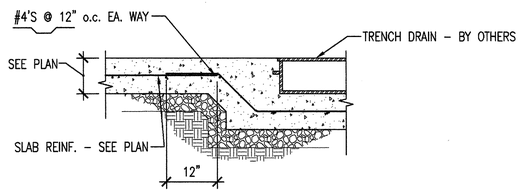

DETAIL 13

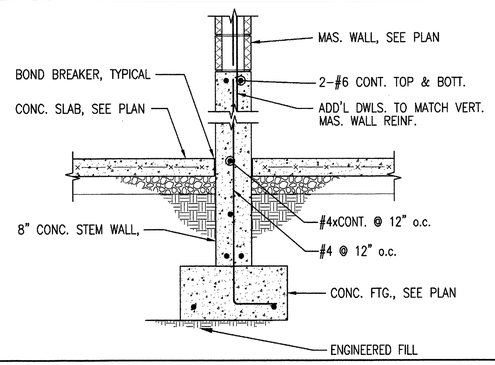

DETAIL 14

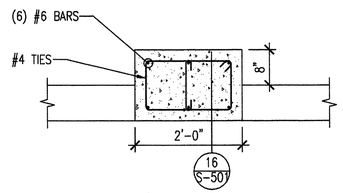

DETAIL 15

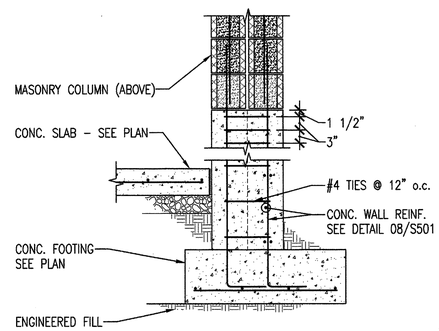

DETAIL 16

Utah Department of Transportation
Maintenance Facility

ISSUE

STRUCTURAL DETAILS

S-501

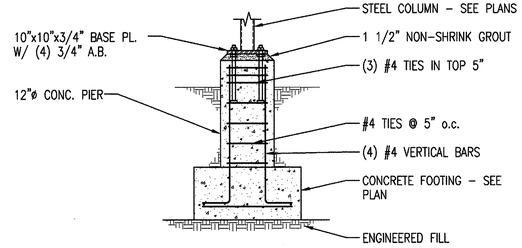

DETAIL 01

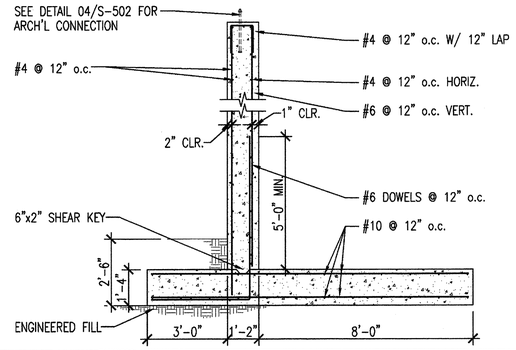

DETAIL 02

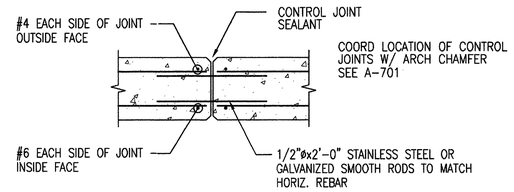

DETAIL 03

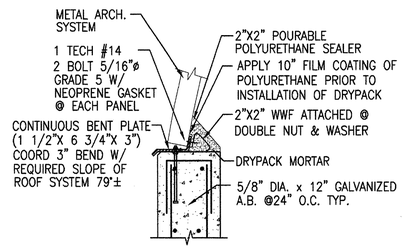

NOTE:
METAL ARCH SYSTEM BY OTHERS

DETAIL 04

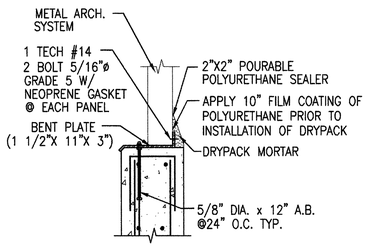

NOTE:
METAL ARCH SYSTEM BY OTHERS

DETAIL 05

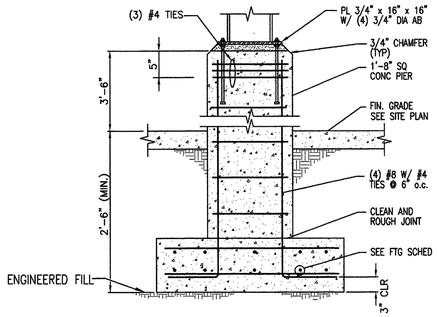

DETAIL 06

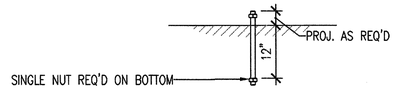

DETAIL 07

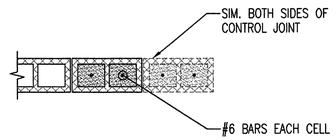

DETAIL 08

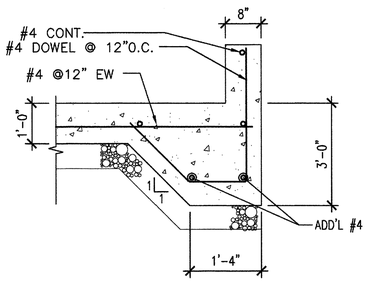

DETAIL 09

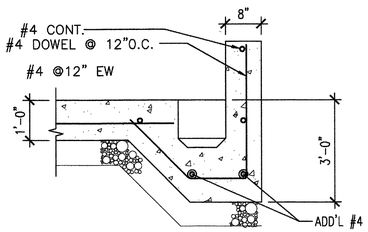

DETAIL 10

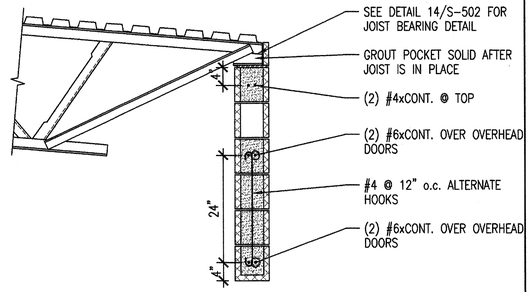

DETAIL 11

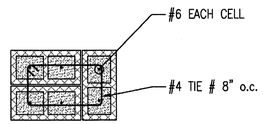

DETAIL 12

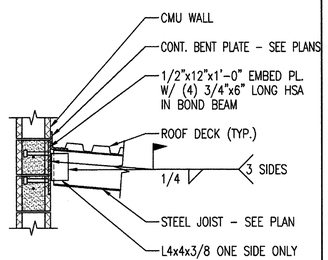

DETAIL 13

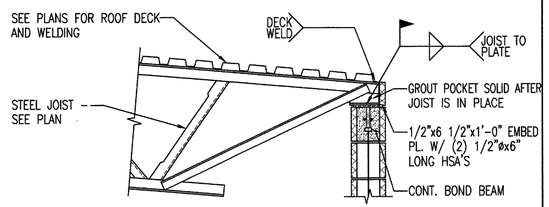

DETAIL 14

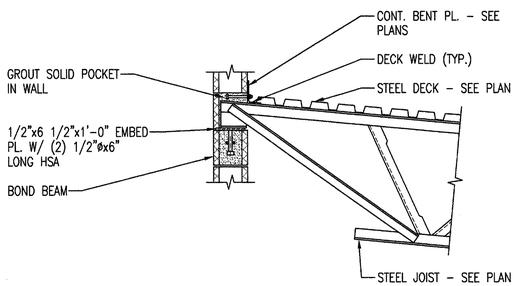

DETAIL 15

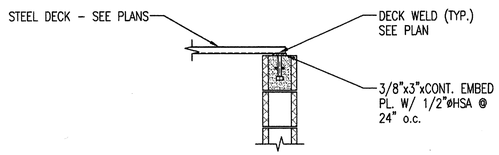

DETAIL 16

Utah Department of Transportation
Maintenance Facility

ISSUE

STRUCTURAL DETAILS

S-502

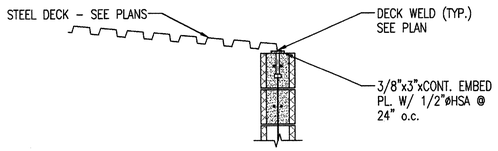

DETAIL 01

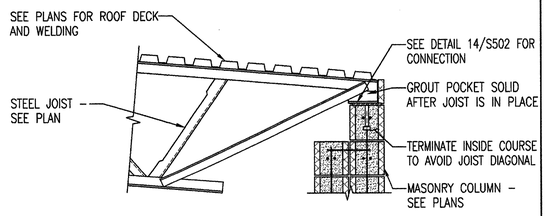

DETAIL 02

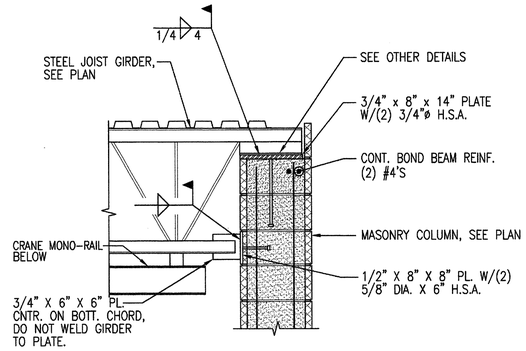

DETAIL 03

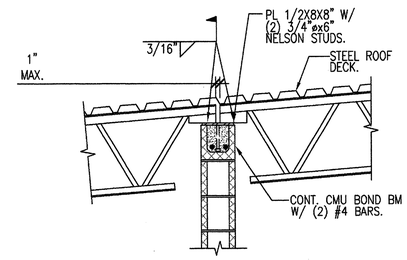

DETAIL 04

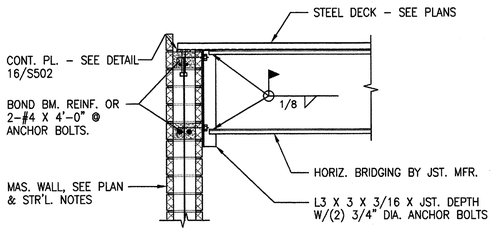

TYP. JST. BRIDGING TO WALL

DETAIL 05

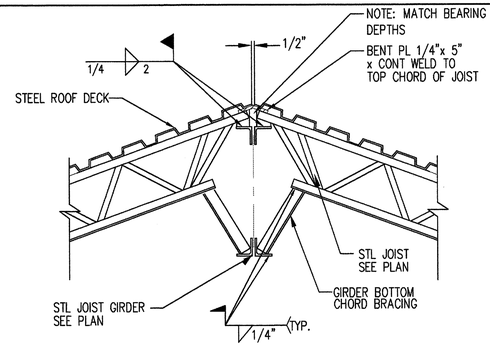

DETAIL 06

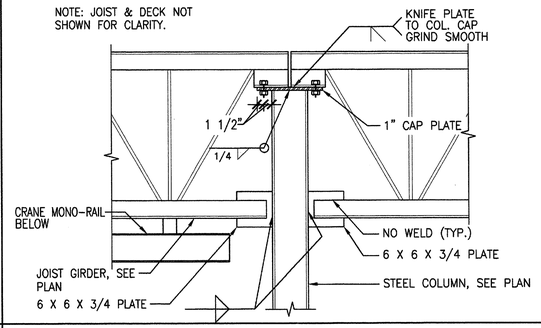

DETAIL 07

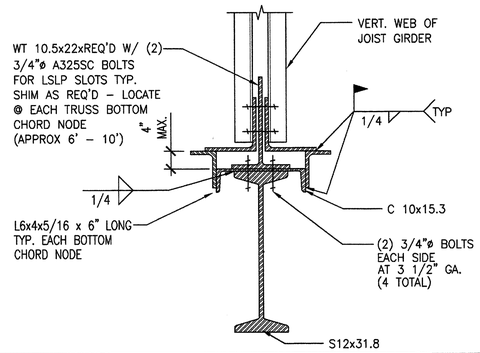

TROLLEY HOIST BEAM CONNECTION 08

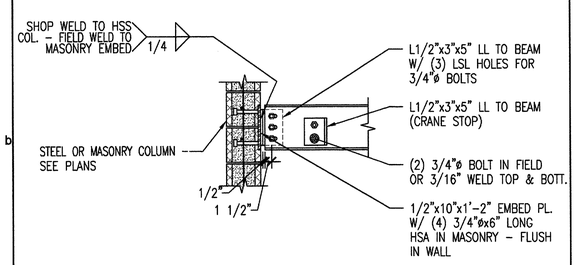

DETAIL 09

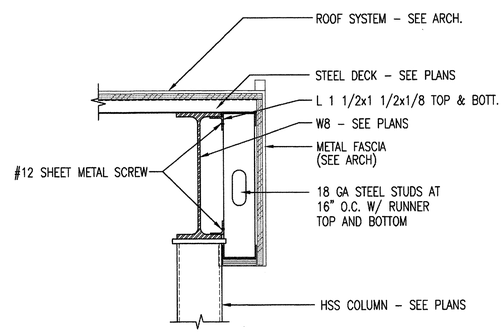

DETAIL 10

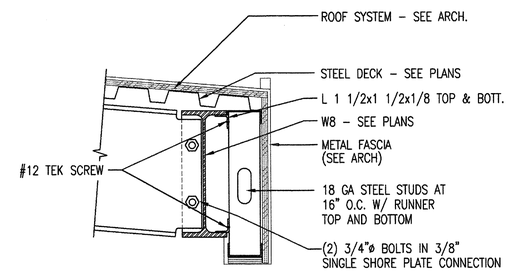

DETAIL 11

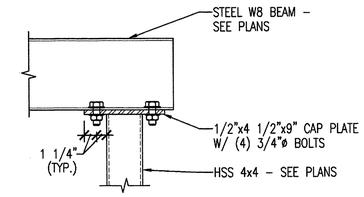

DETAIL 12

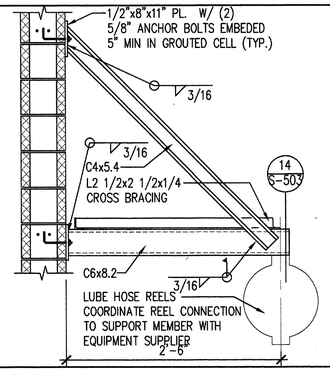

DETAIL 13

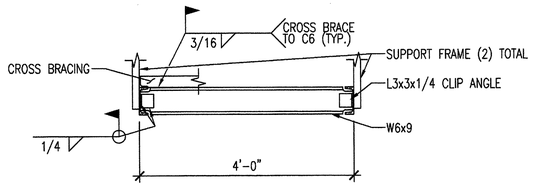

DETAIL 14

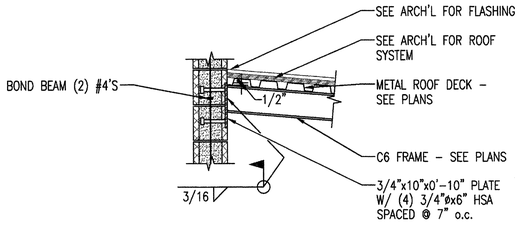

DETAIL 15

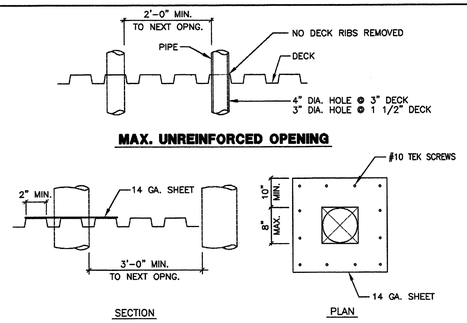

DETAIL 16

Utah Department of Transportation
Maintenance Facility

ISSUE

STRUCTURAL DETAILS

S-503

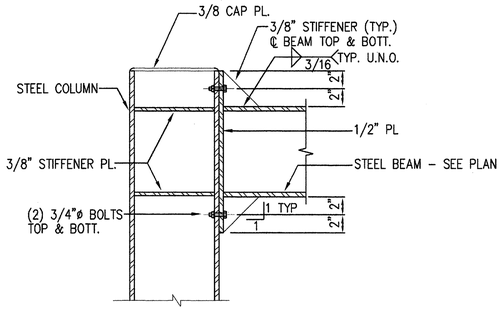

DETAIL 01

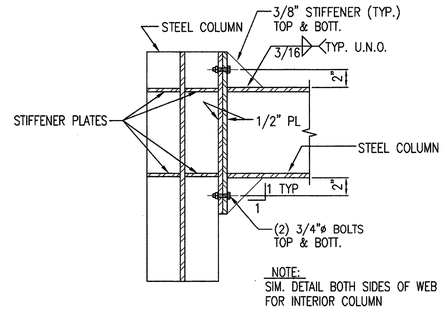

DETAIL 02

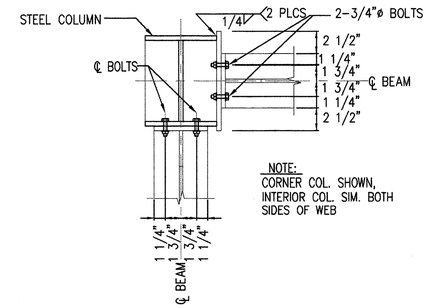

DETAIL 03

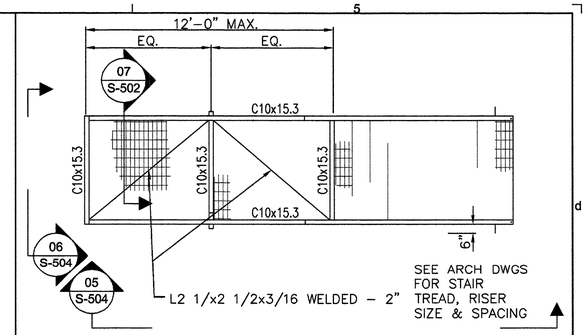

DETAIL 04

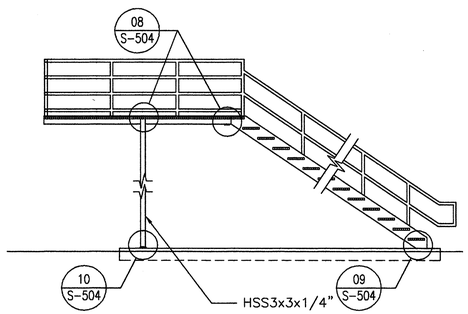

DETAIL 05

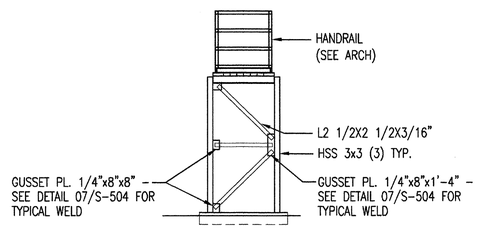

DETAIL 06

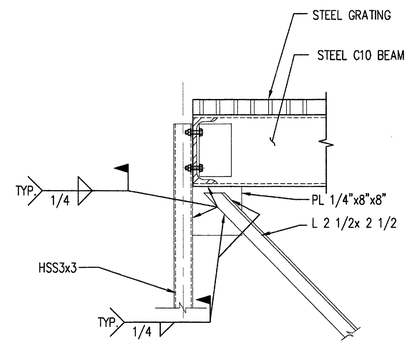

DETAIL 07

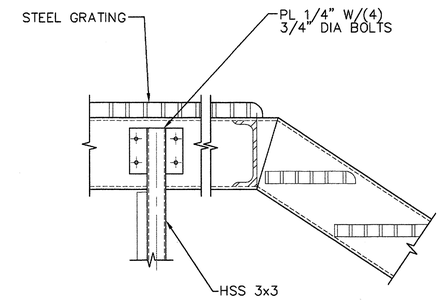

DETAIL 08

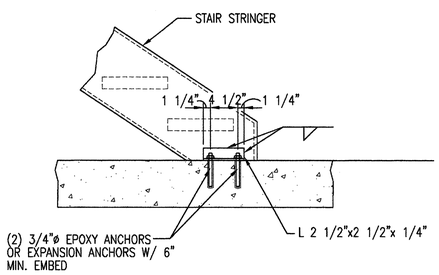

DETAIL 09

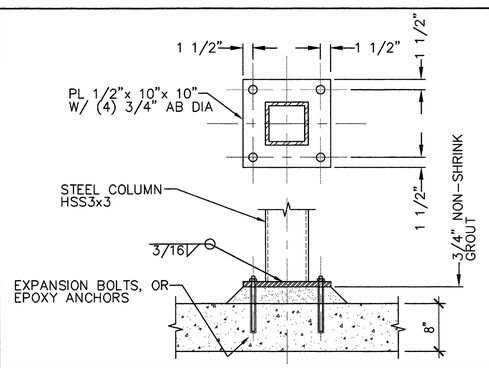

DETAIL 10

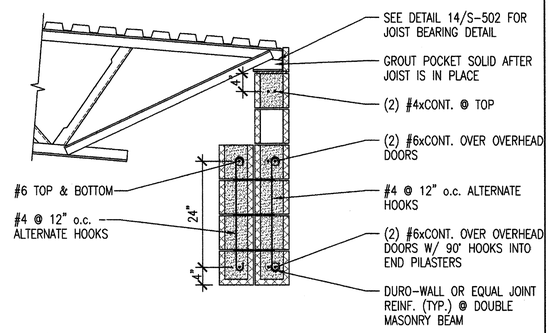

DETAIL 11

DETAIL 12

DETAIL 13

DETAIL 14

DETAIL 15

DETAIL 16

Utah Department of Transportation
Maintenance Facility

ISSUE

STRUCTURAL
DETAILS

S-504

PLUMBING LEGEND

		FLOOR DRAIN
		FLOOR DRAIN W/SEDIMENT BUCKET
		SUMP DRAIN
	FCO	FLOOR CLEANOUT
	WCO	WALL CLEANOUT
	CO	EXPOSED CLEANOUT
	COTG	CLEANOUT TO GRADE
		ROOF DRAIN
		OVERFLOW ROOF DRAIN
		TEE
		TOP CONNECTION
		BOTTOM CONNECTION
		CAP OR PLUG
		PIPE BREAK
		DIRECTION OF FLOW
		DIRECTION OF PIPE SLOPE
		STRAINER
		PUMP
		UNION
		CONCENTRIC REDUCER
		ECCENTRIC REDUCER
		THERMOMETER
		PRESSURE GAUGE
	CW	POTABLE COLD WATER PIPE
	HW	POTABLE HOT WATER PIPE
SS	SS	SANITARY SEWER PIPE BELOW GRADE
GW	GW	GREASE WASTE LINE
GW	GW	GREASE WASTE LINE BELOW GRADE
CWV	CWV	COMBINATION WASTE AND VENT LINE BELOW GRADE
V	V	VENT LINE
VTR	VTR	VENT THROUGH THE ROOF
G	G	NATURAL GAS LINE
D	D	DRAIN LINE
1		KEYED NOTE CALLOUT
WH-1		EQUIPMENT CALLOUT
XX-X		FIXTURE CALLOUT
1 P4	SECTION SHEET #	SECTION CALLOUT
2		DETAIL CALLOUT

PLUMBING GENERAL NOTES

1. PROVIDE ALL LABOR, MATERIALS, AND EQUIPMENT NECESSARY TO CONSTRUCT A COMPLETE, OPERATIONAL PLUMBING SYSTEM FOR THE ENTIRE PROJECT AS SHOWN ON THESE DRAWINGS, INCLUDING ALL NECESSARY FEES AND PERMITS.

2. THE ENTIRE INSTALLATION SHALL CONFORM TO THE MOST RECENTLY ADOPTED REQUIREMENTS OF THE INTERNATIONAL MECHANICAL CODE, UNIFORM MECHANICAL CODE, INTERNATIONAL PLUMBING CODE, INTERNATIONAL BUILDING CODE, UNIFORM PLUMBING CODE, UNIFORM BUILDING CODE, AND ALL OTHER APPLICABLE CITY, COUNTY AND STATE CODES AND REGULATIONS IN EFFECT AT THE DATE OF THE BID.

3. PRIOR TO FABRICATION AND INSTALLATION, THE DIV.15 CONTRACTOR SHALL COORDINATE THE INSTALLATION OF ALL PLUMBING PIPING AND PLUMBING EQUIPMENT WITH ALL DUCTWORK, FIRE PROTECTION PIPING AND ALL OTHER TRADES, INCLUDING, BUT NOT LIMITED TO: THE MECHANICAL CONTRACTOR, ELECTRICAL CONTRACTOR, FIRE PROTECTION CONTRACTOR, GENERAL CONTRACTOR, AND ANY CONTRACTOR HIRED DIRECTLY BY THE OWNER. WHERE CONFLICTS MAY OCCUR, THEY SHALL BE RESOLVED PRIOR TO INSTALLATION.

4. THE DRAWINGS SHOW THE GENERAL DESIGN, ARRANGEMENTS AND THE EXTENT OF THE SYSTEM. IT SHALL BE THE WORK OF THE CONTRACTOR TO MAKE SUCH SLIGHT ALTERATIONS AS MAY BE NECESSARY TO MAKE THE SYSTEM COMPLETE AND OPERATIONAL IN ACCORDANCE WITH THE DESIGN INTENT. MAJOR DEVIATIONS SUCH AS CHANGES IN COMPONENT SIZES, WEIGHTS, QUANTITIES, OR MATERIAL REQUIRE PRIOR APPROVAL BY THE CONSULTING ENGINEER.

5. ALL PLUMBING INFORMATION IS NOT SHOWN ON THE PLUMBING DRAWINGS. THE CONTRACTOR SHALL BE RESPONSIBLE FOR COORDINATING INFORMATION ON ALL OTHER CONSTRUCTION DOCUMENTS INCLUDING ARCHITECTURAL, STRUCTURAL, MECHANICAL AND ELECTRICAL DRAWINGS.

6. THE WORKING DRAWINGS ARE DIAGRAMMATIC. BECAUSE OF THE SMALL SCALE OF THE DRAWINGS, THEY DO NOT SHOW EVERY OFFSET, BEND OR ELBOW NECESSARY FOR THE COMPLETE INSTALLATION IN THE SPACE PROVIDED. ALL LOCATIONS FOR PLUMBING EQUIPMENT AND PIPING SHALL BE CHECKED AND COORDINATED WITH THE ARCHITECTURAL, MECHANICAL, STRUCTURAL AND ELECTRICAL DRAWINGS.

7. EXACT ROUTING OF WASTE, GAS, AND WATER SERVICE IS DEPENDANT ON LOCAL SITE CONDITIONS AND MODIFICATIONS IN EQUIPMENT CONNECTIONS. EXACT LOCATION OF EQUIPMENT MAY VARY DEPENDING ON LOCAL CODE, HEALTH DEPARTMENT AND CITY REQUIREMENTS.

8. THE DRAWINGS AND SPECIFICATIONS HAVE BEEN PREPARED TO SUPPLEMENT EACH OTHER AND THEY SHALL BE INTERPRETED AS AN INTEGRAL UNIT WITH THE ITEMS SHOWN ON ONE AND NOT THE OTHER BEING FURNISHED AND INSTALLED AS THOUGH SHOWN AND CALLED OUT IN BOTH.

9. PREPARE 6 COPIES OF SUBMITTALS IN AN INDEXED, LABELED FOLDER CONTAINING FULL PERFORMANCE, MATERIAL AND INSTALLATION INFORMATION ABOUT ALL EQUIPMENT, PIPING, COMPONENTS AND ACCESSORIES TO BE USED. SPECTRUM MECHANICAL ENGINEERS WILL CHECK SUBMITTALS AT MOST TWICE. TIME SPENT ON SUBSEQUENT SUBMITTALS WILL BE BILLED TO THE CONTRACTOR BY SPECTRUM AT SPECTRUMS CURRENT HOURLY RATES.

10. THE STRUCTURE SHOWN ON ALL DETAILS MAY OR MAY NOT PERTAIN TO A PORTION OR ANY PORTION OF THE BUILDING. COORDINATE MOUNTING REQUIREMENTS WITH ARCHITECTURAL DRAWINGS AND STRUCTURAL.

11. ANY PART OF THIS INSTALLATION THAT FAILS, IS UNFIT, OR BECOMES DAMAGED DURING CONSTRUCTION SHALL BE REPAIRED OR REPLACED BY THE CONTRACTOR AT NO ADDITIONAL COST TO THE OWNER.

12. ALL EQUIPMENT SHALL PROVIDE THE SCHEDULED PERFORMANCE AT THE SITE ALTITUDE.

13. ALL EQUIPMENT SHALL BE INSTALLED IN STRICT ACCORDANCE WITH THE EQUIPMENT MANUFACTURER'S RECOMMENDATIONS. PROVIDE ALL FITTINGS, TRANSITIONS, VALVES, AND OTHER DEVICES AND ACCESSORIES REQUIRED FOR A COMPLETE, WORKABLE INSTALLATION.

14. THE DIVISION 15 CONTRACTOR SHALL FURNISH ALL REQUIRED MOTORS. ALL MOTOR STARTING EQUIPMENT, WHEN NOT A PART OF THE EQUIPMENT, WILL BE FURNISHED BY THE ELECTRICAL CONTRACTOR.

15. EXISTING INTERIOR PIPING AND EQUIPMENT HAS BEEN LOCATED IN AN APPROXIMATE WAY ONLY. THE CONTRACTOR SHALL VERIFY LOCATIONS AND POINTS OF CONNECTION AND PIPE ROUTING THROUGH EXISTING CONDITIONS PRIOR TO COMMENCING WORK. THE CONTRACTOR SHALL PERFORM THE WORK IN A MANNER THAT WILL CAUSE A MINIMUM DISRUPTION TO BUILDING TENANT USE AND SHALL COORDINATE THE WORK WITH THE BUILDING OWNER'S REPRESENTATIVE.

16. THE CONTRACTOR IS RESPONSIBLE FOR PLUMBING EQUIPMENT CHECK-IN, SAFEKEEPING, AND DAMAGE.

17. INVERTS SHOWN ON PLUMBING DRAWINGS MAY BE REFERENCED FROM THE FINISHED FLOOR ELEVATION. COORDINATE ALL INVERTS WITH CIVIL DRAWINGS PRIOR TO INSTALLATION.

18. PROVIDE WALL CLEANOUTS IN ALL VENTS FOR COMBINATION WASTE AND VENT SYSTEMS AS REQUIRED BY LOCAL AND NATIONAL CODES.

19. ALL VENT FITTINGS FOR WASTE SYSTEMS BELOW OVERFLOWS OF FIXTURES SHALL BE DRAINAGE TYPE.

20. CONTRACTOR TO COMPLY WITH THE LATEST ADOPTED PLUMBING CODE WHEN SIZING TRAP ARMS ON COMBINATION WASTE AND VENT SYSTEMS. THE DRAWINGS INDICATE THE WASTE LINE SIZE AND THE SIZE OF THE TRAP REQUIRED.

21. PROVIDE CLEANOUTS IN ACCORDANCE WITH THE REQUIREMENTS OF APPLICABLE CODES. FLOOR CLEANOUTS SHALL BE LOCATED OUT OF TRAFFIC AREAS.

22. LOCATE ALL PLUMBING VENTS AT LEAST 3 FEET ABOVE OR 10 FEET AWAY FROM ALL OUTSIDE AIR INTAKES INTO THE BUILDING.

23. SEE "PLUMBING FIXTURE SCHEDULE" FOR FIXTURE MAKE AND TYPE, AND SIZE OF INDIVIDUAL WASTE, VENT, AND DOMESTIC WATER PIPING TO FIXTURES.

24. ALL PLUMBING EQUIPMENT SHALL BE LISTED AND LABELED BY AN APPROVED TESTING AGENCY.

25. EQUIPMENT AND INSTALLATION SHALL MEET NATIONAL SANITATION FOUNDATION (NSF) STANDARDS, OR EQUIVALENT.

26. PROVIDE PROPER PROVISIONS FOR EXPANSION OR MOVEMENT OF ALL PIPING.

27. ALL PIPES SHALL BE SECURED BY DOUBLE NUTTING AT THE HANGER ROD ATTACHMENT TO THE STRUCTURE, AND AT THE PIPE HANGER.

28. PROVIDE WATER HAMMER ARRESTORS (SHOCK ABSORBERS) AT ALL PIPE LOCATIONS WHERE VALVE CLOSURES (SUCH AS FLUSH VALVES) MAY CAUSE WATER HAMMER OR RESULT IN EXCESSIVE PIPE VIBRATION OR MOVEMENT.

29. PROPERLY LUBRICATE ALL PIECES OF EQUIPMENT BEFORE TURNING THE SYSTEM OVER TO THE OWNER.

30. TWO OPERATING AND MAINTENANCE MANUALS SHALL BE PROVIDED IN HARD BACK LOOSE LEAF BINDERS. MANUALS SHALL CONTAIN PRODUCT CUT SHEETS AND OPERATING AND MAINTENANCE INSTRUCTIONS ON ALL EQUIPMENT, ACCESSORIES, FIXTURES, VALVES, ETC., PROVIDED FOR THE PROJECT.

31. UPON COMPLETION OF THE WORK, REMOVE ALL SURPLUS MATERIALS AND RUBBISH. MAKE ALL REQUIRED PATCHING AND REPAIRS OF OTHER TRADES' WORK DAMAGED BY THIS CONTRACTOR, AND LEAVE THE PREMESIS IN A CLEAN, ORDERLY CONDITION.

32. THE CONTRACTOR SHALL OPERATE THE SYSTEM AND DEMONSTRATE ALL ASPECTS TO THE ENGINEER AND/OR OWNER, TO PROVE ITS OPERATION.

33. THE CONTRACTOR SHALL GUARANTEE THE PLUMBING SYSTEM FOR A PERIOD OF ONE YEAR FROM THE DATE OF SUBSTANTIAL COMPLETION.

34. THE CONTRACTOR SHALL, DURING CONSTRUCTION, MAINTAIN A SET OF AS-BUILT REDLINED RECORD DRAWINGS AT THE PROJECT SITE. ALL CHANGES IN LAYOUT, ROUTING, EQUIPMENT, COMPONENTS, AND ACCESSORIES SHALL BE RECORDED. THESE REDLINES SHALL BE GIVEN TO THE ARCHITECT/ENGINEER AFTER THE FINAL INSPECTION.

PLUMBING FIXTURE SCHEDULE

SPECIFICATION SECTION 15440

SYMBOL	FIXTURE	COLD WATER	HOT WATER	WASTE	TRAP	VENT	ACCESSORIES AND REMARKS
WC-1	WATER CLOSET	1/2"	--	4"	INT.	2"	FLOOR MOUNTED, TANK TYPE (ADA)
U-1	URINAL	3/4"	--	2"	INT.	2"	WALL HUNG, FLUSH VALVE
L-1	LAVATORY	1/2"	1/2"	1-1/2"	1-1/2"	1-1/2"	WALL HUNG (ADA)
S-1	SINK	1/2"	1/2"	1-1/2"	1-1/2"	1-1/2"	DOUBLE COMPARTMENT, STAINLESS STEEL
SS-1	SERVICE SINK	1/2"	1/2"	3"	3"	2"	WALL HUNG, STAINLESS STEEL
EWC-1	ELECTRIC WATER COOLER	1/2"	--	1-1/2"	1-1/2"	1-1/2"	SINGLE
EEW-1	EMERGENCY EYE WASH/SHOWER	1-1/4"	--	--	--	--	--
HB-1	HOSE BIBB	3/4"	--	--	--	--	MILD CLIMATE, BACKFLOW PREVENTER
HB-2	HOSE BIBB	3/4"	--	--	--	--	RECESSED NON-FREEZE
A-1	COMPRESSED AIR OUTLET	--	--	--	--	--	1/2"ø, C/W SHUT-OFF VALVE, FILTER AND QUICK DISCONNECT
FD-1	FLOOR DRAIN	--	--	2"	2"	1-1/2"	PROVIDE DEEP SEAL P-TRAP
FD-2	FLOOR DRAIN W/SEDIMENT BUCKET	--	--	4"	4"	SEE DWGS. FOR SIZE	PROVIDE DEEP SEAL P-TRAP
TD-1	TRENCH DRAIN	--	--	4"	4"	SEE DWGS. FOR SIZE	PROVIDE DEEP SEAL P-TRAP
GI-1	SAND/GREASE INTERCEPTOR	--	--	4"	--	SEE DWGS. FOR SIZE	1000 GALLON, PROVIDE SAMPLING MANHOLE

GAS FIRED WATER HEATER SCHEDULE

SYMBOL	MFR. CATALOG NO.	SERVICE	CAPACITY GALLONS	FUEL GAS	INPUT BTU	RECOV GPH	TANK SIZE	TEMP F IN/OUT	FLUE SIZE	REMARKS
WH-1	A.O. SMITH FGC-30	HOT WATER	30	NAT. GAS	40,000	36.9	20"	40°/120°	3"	*

* PROVIDE WITH EXPANSION TANK. A.O. SMITH-AMTROL ST-5-2 CAL, 8"ø x 12"H, MOUNT WATER HEATER ON 18" HIGH PLATFORM

NATURAL GAS REQUIREMENTS

SPECIFICATION SECTION 15488

EQUIP. NO.	QTY.	LOCATION	EQUIPMENT	BTUH INPUT	TOTAL INPUT
WH-1	1	MECHANICAL ROOM	WATER HEATER	40,000	40,000
RH-1	14	BAY AREAS	RADIANT HEATERS	80,000	1,120,000
UH-1	1	STORAGE BAY	UNIT HEATER	150,000	150,000
F-1	1	MECHANICAL ROOM	FURNACE	100,000	100,000

TOTAL (BTUH) 1,410,000
BTU/CUBIC FT. = 890
TOTAL (CFH) 1585

GAS PRESSURE IN BUILDING = 2 PSI
PIPE SIZE AT METER = 1-1/4"

Utah Department of Transportation
Maintenance Facility

ISSUE

Plumbing Notes & Schedules

P-001

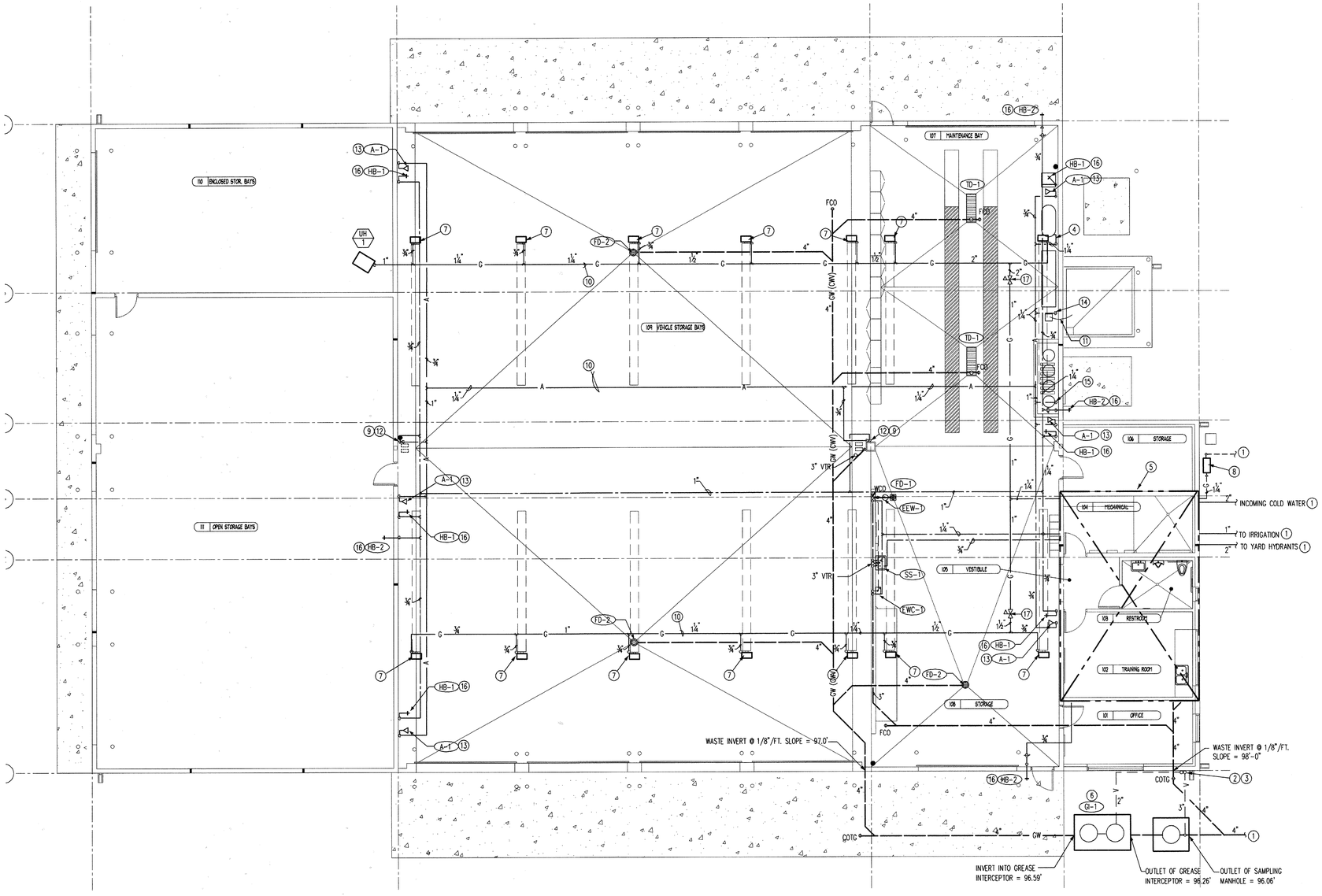

PLUMBING FLOOR PLAN

SCALE: 1/8" = 1'-0"

NORTH

KEYED NOTES

1. SEE SITE UTILITY PLAN FOR CONTINUATION.
2. VENTS FROM INTERCEPTOR, VENTS MAY BE COMBINED AFTER THEY ARE 6" ABOVE THE FLOOR RIM OF THE INTERCEPTOR.
3. RAISE 3" VENT 8'-0" ABOVE SLAB
4. 10 HP, 208 V, 3 PHASE AIR COMPRESSOR BY CONTRACTOR. SEE SPECIFICATION SECTION 15484. CONNECT 1-1/4" COMPRESSED AIR LINE TO COMPRESSOR. PROVIDE SHUT-OFF VALVE AND UNION.
5. SEE ENLARGED PLAN, THIS SHEET FOR PLUMBING IN THIS AREA.
6. SAND AND GREASE INTERCEPTOR WITH SAMPLING MANHOLE, SEE DETAILS 8 & 9 SHEET P-201.
7. CONNECT 3/4" GAS LINE TO RADIANT HEATER. PROVIDE SHUT-OFF VALVE AND UNION. TYPICAL
8. GAS METER TO PROVIDE 1585 CFH AT 2 PSI PRESSURE. PROVIDE 1-1/4" GAS LINE TO SERVE BUILDING.
9. DROP 3/4" AIR LINE TO 36" ABOVE FINISH FLOOR AND PROVIDE BALL VALVE.
10. ROUTE PIPING ABOVE STRUCTURAL ITEMS.
11. CONNECT OIL DRAIN LINE TO DRAIN PUMP. RUN DRAIN LINE OUT TO CATCH TANK. PROVIDE SHUT-OFF VALVE AND UNION. CATCH TANK FURNISHED BY OWNER, INSTALLED BY CONTRACTOR. DRAIN PUMP BY CONTRACTOR. VERIFY LOCATION. SEE SPECIFICATION SECTION 15484.
12. CONNECT 1" COMPRESSED AIR LINE AND 3/4" COLD WATER LINE TO OVERHEAD HOSE REEL. PROVIDE SHUT-OFF AND UNION. HOSE REEL BY CONTRACTOR. SEE SPECIFICATION SECTION 15484.
13. 3/4" COMPRESSED AIR DROP DOWN TO QUICK DISCONNECT. PROVIDE SHUT-OFF VALVE. VERIFY MOUNTING HEIGHT WITH OWNER.
14. DROP 3/4" COMPRESSED AIR TO OIL DRAIN PUMP. PROVIDE SHUT-OFF VALVE. DRAIN PUMP BY CONTRACTOR. SEE SPECIFICATION SECTION 15484.
15. DROP 1" COMPRESSED AIR LINE TO LUBE BARRELS. PROVIDE SHUT-OFF VALVE. LUBE BARRELS BY OWNER, INSTALLED BY CONTRACTOR
16. PROVIDE PVC COVER OVER INSULATION TO 8'-0" A.F.F.
17. PROVIDE GAS PRESSURE REGULATOR WITH VENT LIMITING DEVICE TO REDUCE PRESSURE FROM 2 PSI TO 4 OUNCE.
18. SEE PLUMBING FLOOR PLAN, THIS SHEET FOR CONTINUATION.
19. RISE UP TO STRUCTURE HEIGHT OF SERVICE AREA. MAINTAIN A MINIMUM HEIGHT OF 22'-6".
20. PRV STATION, SEE DETAIL 7, SHEET P-201.
21. DROP HOT AND COLD WATER DOWN WALL, RUN TO SINK IN CABINET.

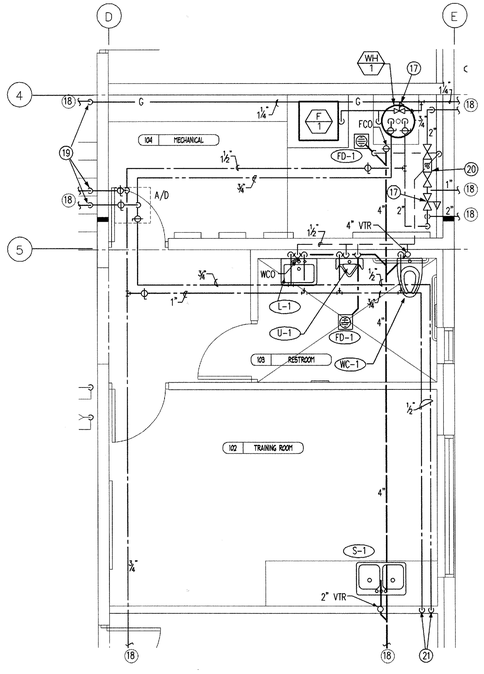

ENLARGED PLUMBING PLAN

SCALE: 1/4" = 1'-0"

Utah Department of Transportation
Maintenance Facility

ISSUE

Plumbing Floor Plan

P-101

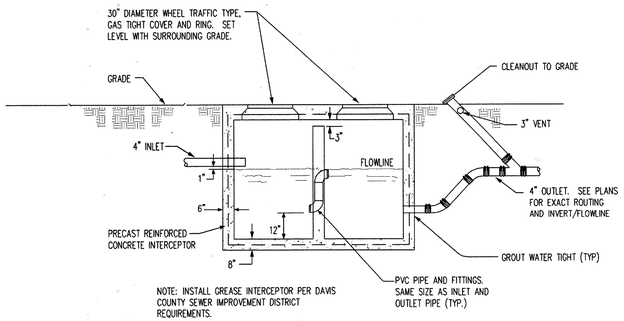

GREASE INTERCEPTOR DETAIL (8)
NO SCALE

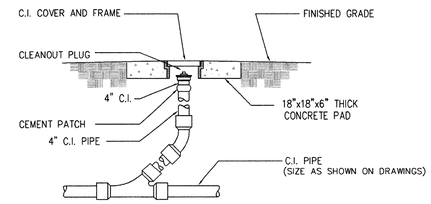

CLEANOUT TO GRADE DETAIL (COTG) (5)
NO SCALE

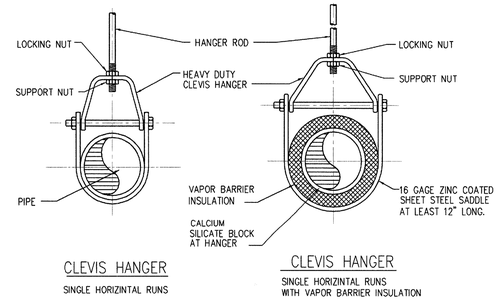

PIPE HANGER DETAIL (1)
NO SCALE

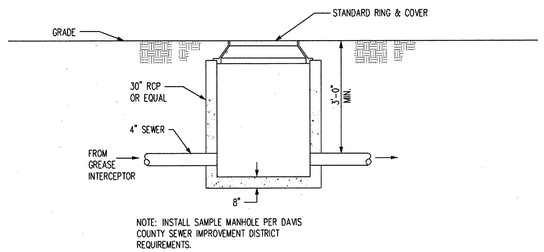

SAMPLE MANHOLE (9)
NO SCALE

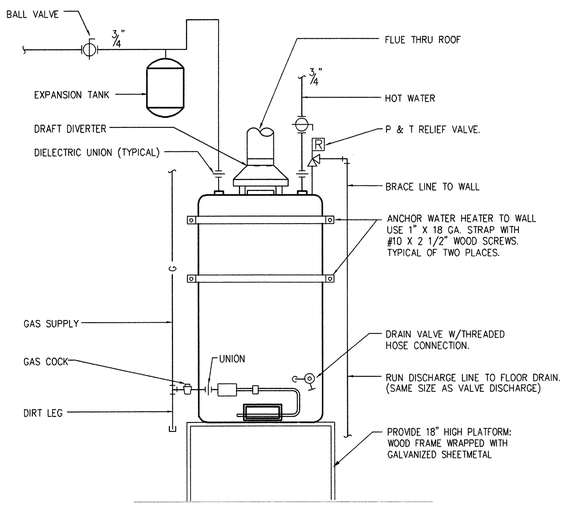

WATER HEATER DETAIL (6)
NO SCALE

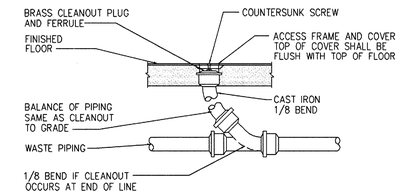

FLOOR CLEANOUT DETAIL (FCO) (2)
NO SCALE

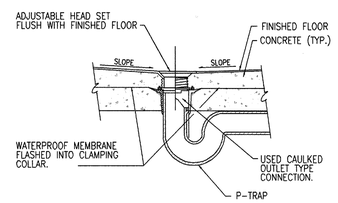

FLOOR DRAIN DETAIL (3)
NO SCALE

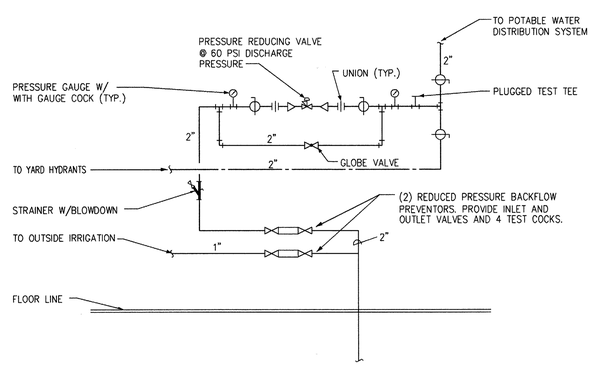

PRV/RPBP DETAIL (7)
NO SCALE

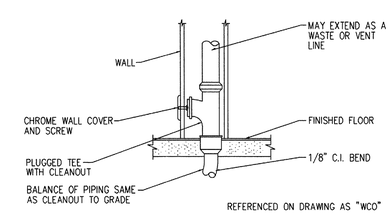

WALL CLEANOUT DETAIL (4)
NO SCALE

Utah Department of Transportation
Maintenance Facility

ISSUE

Plumbing Details

P-201

LEGEND

	BRANCH DUCT TAKE-OFF
	TURNING VANES
	DUCT TRANSITION
	OPPOSED BLADE VOLUME DAMPER W/ CONCEALED CEILING DPR REGULATOR
T	THERMOSTAT
RA	RETURN AIR
SA	SUPPLY AIR
FA	FRESH AIR
OA	OUTDOOR AIR
	FLEXIBLE DUCT
ATC	AUTOMATIC TEMP. CONTROL

HVAC GENERAL NOTES

1. PROVIDE ALL LABOR, MATERIALS, AND EQUIPMENT NECESSARY TO CONSTRUCT A COMPLETE, OPERATIONAL HVAC SYSTEM FOR THE ENTIRE PROJECT AS SHOWN ON THESE DRAWINGS, INCLUDING ALL NECESSARY FEES AND PERMITS.

2. THE ENTIRE INSTALLATION SHALL CONFORM TO THE MOST RECENTLY ADOPTED REQUIREMENTS OF THE INTERNATIONAL MECHANICAL CODE, UNIFORM MECHANICAL CODE, INTERNATIONAL PLUMBING CODE, INTERNATIONAL BUILDING CODE, UNIFORM PLUMBING CODE, UNIFORM BUILDING CODE, AND ALL OTHER APPLICABLE CITY, COUNTY AND STATE CODES AND REGULATIONS IN EFFECT AT THE DATE OF THE BID.

3. COORDINATE THE INSTALLATION OF ALL HVAC PIPING, DUCTWORK, AND EQUIPMENT WITH PLUMBING PIPING, PLUMBING EQUIPMENT, REFRIGERATION TRENCHES AND PIPING, FIRE PROTECTION PIPING AND ALL OTHER TRADES INCLUDING BUT NOT LIMITED TO: THE MECHANICAL CONTRACTOR, REFRIGERATION CONTRACTOR, ELECTRICAL CONTRACTOR, FIRE PROTECTION CONTRACTOR, GENERAL CONTRACTOR, AND ANY CONTRACTOR HIRED DIRECTLY BY THE OWNER PRIOR TO FABRICATION AND INSTALLATION. WHERE CONFLICTS MAY OCCUR, THEY SHALL BE RESOLVED PRIOR TO INSTALLATION.

4. THE DRAWINGS SHOW THE GENERAL DESIGN, ARRANGEMENTS AND THE EXTENT OF THE SYSTEM. IT SHALL BE THE WORK OF THE CONTRACTOR TO MAKE SUCH SLIGHT ALTERATIONS AS MAY BE NECESSARY TO MAKE THE SYSTEM COMPLETE AND OPERATIONAL IN ACCORDANCE WITH THE DESIGN INTENT. MAJOR DEVIATIONS SUCH AS CHANGES IN COMPONENT SIZES, WEIGHTS, QUANTITIES, OR MATERIAL REQUIRE PRIOR APPROVAL BY THE CONSULTING ENGINEER.

5. ALL HVAC INFORMATION IS NOT SHOWN ON THE HVAC DRAWINGS. THE CONTRACTOR SHALL BE RESPONSIBLE FOR COORDINATING INFORMATION ON ALL OTHER CONSTRUCTION DOCUMENTS INCLUDING ARCHITECTURAL, STRUCTURAL, MECHANICAL, ELECTRICAL AND REFRIGERATION DRAWINGS.

6. THE WORKING DRAWINGS ARE DIAGRAMMATIC. BECAUSE OF THE SMALL SCALE OF THE DRAWINGS, THEY DO NOT SHOW EVERY OFFSET, BEND OR ELBOW NECESSARY FOR THE COMPLETE INSTALLATION IN THE SPACE PROVIDED. ALL LOCATIONS FOR HVAC EQUIPMENT AND PIPING SHALL BE CHECKED AND COORDINATED WITH THE ARCHITECTURAL, MECHANICAL, STRUCTURAL AND ELECTRICAL DRAWINGS.

7. SPACE ABOVE ALL CEILINGS IS EXTREMELY LIMITED. CAREFUL COORDINATION IS REQUIRED WITH ALL TRADES BEFORE ANY PIPE, DUCT, OR EQUIPMENT IS ORDERED AND/OR INSTALLED. 1/8" SCALE SHOP DRAWINGS ARE REQUIRED FOR ALL DIVISION 15 WORK. ANY CONFLICTS AND/OR CHANGES FOUND DURING INSTALLATION THAT RESULT FROM LACK OF COORDINATION BY THE CONTRACTORS DURING THE SHOP DRAWING PROCESS ARE THE RESPONSIBILITY OF THE CONTRACTOR.

8. THE DRAWINGS AND SPECIFICATIONS HAVE BEEN PREPARED TO SUPPLEMENT EACH OTHER AND THEY SHALL BE INTERPRETED AS AN INTEGRAL UNIT WITH THE ITEMS SHOWN ON ONE AND NOT THE OTHER BEING FURNISHED AND INSTALLED AS THOUGH SHOWN AND CALLED OUT IN BOTH.

9. DETAILS: THE CONTRACTOR IS RESPONSIBLE TO REVIEW AND USE WHERE APPROPRIATE ALL OF THE MECHANICAL DETAILS SHOWN ON THE DRAWINGS. DETAILS MAY OR MAY NOT BE CALLED OUT ON THE DRAWINGS WITH SYMBOLS OR KEYED NOTES. ANY CHANGES RESULTING FROM FAILURE TO INSTALL THE MECHANICAL SYSTEM WITHOUT USING THE INCLUDED DETAILS IS THE RESPONSIBILITY OF THE CONTRACTOR.

10. PREPARE 6 COPIES OF SUBMITTALS IN AN INDEXED, LABELED FOLDER CONTAINING FULL PERFORMANCE, MATERIAL AND INSTALLATION INFORMATION ABOUT ALL EQUIPMENT, PIPING, COMPONENTS AND ACCESSORIES TO BE USED. SPECTRUM MECHANICAL ENGINEERS WILL CHECK SUBMITTALS AT MOST TWICE. TIME SPENT ON SUBSEQUENT SUBMITTALS WILL BE BILLED TO THE CONTRACTOR BY SPECTRUM AT SPECTRUM'S CURRENT HOURLY RATES.

11. THE STRUCTURE SHOWN ON ALL DETAILS MAY OR MAY NOT PERTAIN TO A PORTION OR ANY PORTION OF THE BUILDING. COORDINATE MOUNTING REQUIREMENTS WITH ARCHITECTURAL DRAWINGS AND STRUCTURAL.

12. ANY PART OF THIS INSTALLATION THAT FAILS, IS UNFIT, OR BECOMES DAMAGED DURING CONSTRUCTION SHALL BE REPAIRED OR REPLACED BY THE CONTRACTOR AT NO ADDITIONAL COST TO THE OWNER.

13. ALL EQUIPMENT SHALL PROVIDE THE SCHEDULED PERFORMANCE AT THE SITE ALTITUDE.

14. ALL EQUIPMENT SHALL BE INSTALLED IN STRICT ACCORDANCE WITH THE EQUIPMENT MANUFACTURER'S RECOMMENDATIONS. PROVIDE ALL FITTINGS, TRANSITIONS, VALVES, DAMPERS, AND OTHER DEVICES AND ACCESSORIES REQUIRED FOR A COMPLETE, WORKABLE INSTALLATION.

15. THE DIVISION 15 CONTRACTOR SHALL FURNISH ALL REQUIRED MOTORS. ALL MOTOR STARTING EQUIPMENT, WHEN NOT A PART OF THE EQUIPMENT, WILL BE FURNISHED BY THE ELECTRICAL CONTRACTOR.

16. THE CONTRACTOR IS RESPONSIBLE FOR HVAC EQUIPMENT CHECK-IN, SAFEKEEPING, AND DAMAGE.

17. PROPERLY LUBRICATE ALL PIECES OF EQUIPMENT BEFORE TURNING THE SYSTEM OVER TO THE OWNER.

18. TWO OPERATING AND MAINTENANCE MANUALS SHALL BE PROVIDED IN HARD BACK LOOSE LEAF BINDERS. MANUALS SHALL CONTAIN PRODUCT CUT SHEETS AND OPERATING AND MAINTENANCE INSTRUCTIONS ON ALL EQUIPMENT, ACCESSORIES, FIXTURES, VALVES, ETC., PROVIDED FOR THE PROJECT.

19. UPON COMPLETION OF THE WORK, REMOVE ALL SURPLUS MATERIALS AND RUBBISH. MAKE ALL REQUIRED PATCHING AND REPAIRS OF OTHER TRADES' WORK DAMAGED BY THIS CONTRACTOR, AND LEAVE THE PREMISES IN A CLEAN, ORDERLY CONDITION.

20. THE CONTRACTOR SHALL OPERATE THE SYSTEM AND DEMONSTRATE ALL ASPECTS TO THE ENGINEER AND/OR OWNER, TO PROVE ITS OPERATION. ALL FILTERS USED DURING CONSTRUCTION SHALL BE REPLACED PRIOR TO THE TEST RUN PERIOD.

21. THE CONTRACTOR SHALL GUARANTEE THE HVAC SYSTEM FOR A PERIOD OF ONE YEAR FROM THE DATE OF SUBSTANTIAL COMPLETION.

22. THE CONTRACTOR SHALL, DURING CONSTRUCTION, MAINTAIN A SET OF AS-BUILT REDLINED RECORD DRAWINGS AT THE PROJECT SITE. ALL CHANGES IN LAYOUT, ROUTING, EQUIPMENT, COMPONENTS, AND ACCESSORIES SHALL BE RECORDED. THESE REDLINES SHALL BE GIVEN TO THE ARCHITECT/ENGINEER AFTER THE FINAL INSPECTION.

EXHAUST FAN SCHEDULE

SYMBOL	NO. REQ'D	LOCATION	CFM	TOTAL SP	LB'S	ROOF OR WALL OPENING	MOTOR HP	MOTOR ø	MOTOR CYCLES	MOTOR VOLTS	MOTOR RPM	COMMENTS
EF-1	AS SHOWN	RESTROOM	165	0.25"	22	CEILING	130 WATTS	1	60	120	1050	PENN ZEPHYR Z-8 WITH ROOF CAP
EF-2	AS SHOWN	VEHICLE SVC BAY	13,000	0.25"	255	42"x42"	2	3	60	208	450	PENN BREEZEWAY TYPE BF W/ TYPE EB SHUTTER *
EF-3	AS SHOWN	TRAINING ROOM	165	0.25"	22	CEILING	130 WATTS	1	60	120	1050	PENN ZEPHYR Z-8 WITH ROOF CAP

* PROVIDE INSULATED HOUSING AROUND MOTOR

CONDENSING UNIT

UNIT NO.	MINIMUM BTUH	COMP. MOTOR RLA	COMP. MOTOR LRA	COMP. MOTOR PHASE VOLT.	AIR COOLED CONDENSER FAN MOTOR PHASE/VOLT	AIR COOLED CONDENSER FAN MOTOR FLA	AIR COOLED CONDENSER FAN MOTOR LRA	MAX FUSE	MCA	
CU-1	18,000	13.7	75.0	1/208	1/208	1.1	1.9	30	18.4	

LENNOX MODEL HS29-036, WITH COMPATABLE COIL MOUNTED ON THE FURNACE, COIL SHALL BE ENCLOSED IN FACTORY FABRICATED CABINET. PROVIDE MAKE ALL CONNECTIONS TO CONDENSING UNITS AND TO FURNACES AS RECOMMEMDED BY SPLIT SYSTEM MANUFACTURER. SIZE SUCTION AND LIQUID LINES AS RECOMMENDED BY MANUFACTURER AND ASHRAE. PROVIDE ALL LIQUID AND SUCTION LINE ACCESSORIES AS RECOMMENDED BY MANUFACTURER.

DIFFUSER SCHEDULE

SYMBOL	SIZE	BLOW	TYPE	CFM	COMMENTS
D-1	6"ø NECK	2-WAY	CEILING SUPPLY	65	TITUS MODEL TMS
D-2	12"ø NECK	4-WAY	CEILING SUPPLY	650	TITUS MODEL TMS
D-3	10"x8"	2-WAY	SIDE WALL	380	TITUS MODEL TMS

REGISTER & GRILLE SCHEDULE

SYMBOL	SIZE	TYPE	CFM	COMMENTS
R-1	8"x8"	CEILING RETURN	650	TITUS 25RL
R-2	10"x6"	SIDEWALL RETURN	380	TITUS MODEL TMS
TG-1	10"x10 NECK	TRANSFER	165	TITUS PAR - 12x12 SURFACE MOUNT
L-1	72"x72"	EXHAUST INLET AIR	22 SQ.FT. MIN FREE AREA	AMERICAN WARMING LE-47A PROVIDE WITH FLANGED FRAME AND MOTORIZED DAMPER
L-2	96"x48"	EXHAUST INLET AIR	6 SQ.FT. MIN FREE AREA.	AMERICAN WARMING LE-47A PROVIDE WITH FLANGED FRAME AND MOTORIZED DAMPER
L-3	10"x8"	FRESH AIR	.25 SQ.FT. MIN FREE AREA	PROVIDE W/ BIRDSCREEN
L-4	32"x32"	FRESH AIR	2.5 SQ.FT. MIN FREE AREA	PROVIDE W/ BIRDSCREEN

ELECTRIC WALL HEATER SCHEDULE

SYMBOL	LOCATION	OUTPUT BTU	NO. REQ'D	MOTOR AMPS	MOTOR VOLTS	MOTOR ø	MOTOR CYCLES	MAKE AND MODEL
EWH-1	SEE PLANS	6824	1	8.5	208	1	60	CHROMALOX AWH-4208 WITH BUILT-IN THERMOSTAT

UNIT HEATER SCHEDULE

SYMBOL	MANUFACTURER & MODEL	HEATING INPUT MBH	HEATING OUTPUT MBH	CFM	MOTOR MHP	MOTOR VOLT/ø/HZ
UH-1	LENNOX, MODEL LF24-150A	150,000	120,750	2200	1/8	115/1ø/60

FURNACE SCHEDULE

SYMBOL	INPUT BTU	OUTPUT BTU	CFM	EXT S.P.	FAN SPEED	FILTER NO.	FILTER SIZE	MOTOR HP	MOTOR ø	MOTOR CYCLES	MOTOR VOLT	MOTOR DRIVE	MANUFACTURER AND MODEL NO.
F-1	100,000	91,000	1145	0.8"	MED-HIGH	1	20x25x1	3/4	1	60	120	DIRECT	LENNOX - G26Q3/4-100

GAS-FIRED RADIANT HEATERS

SYMBOL	LOCATION	INPUT BTU	WEIGHT	CONFIG	MOTOR AMPS	MOTOR VOLTS	MOTOR ø	MOTOR CYCLES	FLUE SIZE	MAKE AND MODEL NUMBER
RH-1	AS SHOWN	80,000	130	STRAIGHT	1 RUN 5.0 START	120	1	60	4"ø	CO-RAY-VAC VANTAGE II CTH2-80

Utah Department of Transportation
Maintenance Facility

ISSUE

Mechanical Notes & Schedules

M-001

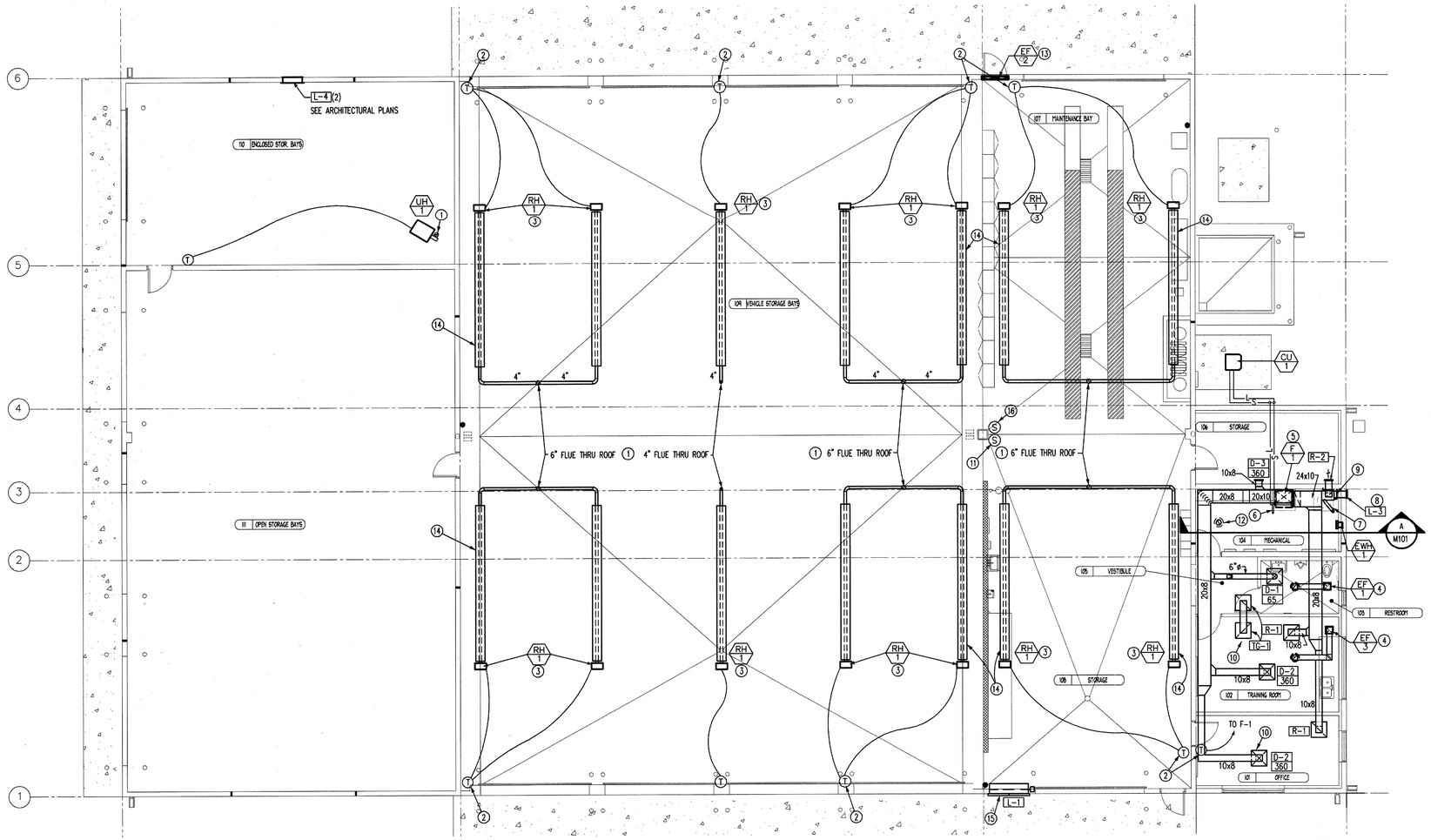

MECHANICAL FLOOR PLAN

SCALE: 1/8" = 1'-0"

NORTH

KEYED NOTES

1. EXTEND FLUE THRU ROOF PER MANUFACTURERS RECOMMENDATIONS. SEE DETAIL 8, SHEET M-201
2. MOUNT THERMOSTAT ON INSULATED BASE, TYPICAL.
3. INSTALL RADIANT HEATERS LEVEL WITH LIGHTS. INSTALL RADIANT HEATERS PER MANUFACTURERS RECOMMENDATIONS. MAINTAIN REQUIRED CLEARANCES.
4. CEILING MOUNTED EXHAUST FAN. RUN DUCT TO ROOF CAP.
5. SEE DETAIL 1, SHEET M-201 FOR ALL REQUIRED PIPING AT FURNACE. MOUNT FURNACE ON 18" HIGH PLATFORM.
6. RISE UP THRU ROOF WITH EXHAUST AND INTAKE PIPES. PROVIDE ROOF TERMINATION KIT. MAINTAIN MINIMUM 10'-0" CLEARANCE FROM INTAKE AIR OPENINGS. SEE DETAIL 5, SHEET M-201.
7. FLUE FROM WATER HEATER. RISE UP TO AVOID DUCT. PROVIDE DOUBLE WALL TYPE B VENT. SEE DETAIL 8, SHEET, M-201.
8. LOUVER L-3 TO SERVE AS OUTSIDE AIR TO FURNACE F-1.
9. MANUAL OUTSIDE AIR DAMPER SET FOR 100 CFM.
10. COORDINATE DIFFUSERS, TRANSFER GILLES AND RETURN AIR GRILLES WITH CEILING GRID. TYPICAL
11. SWITCH FOR SHOP VENTILATION TO INCLUDE EF-2 AND L-1. SEE SEQUENCE OF CONTROLS, SECTION 15950.
12. 8"ø OPENING IN ROOF FOR COMBUSTION AIR. PROVIDE STACK AND CAP. MAINTAIN 10'-0" MINIMUM CLEARANCE FROM EXHAUST OUTLETS. PROVIDE BIRD SCREEN.
13. MOUNT EXHAUST FAN HIGH ON WALL.
14. INSTALL (1) SIDE EXTENSION ON THIS SIDE TO MAINTAIN CLEARANCE.
15. MOUNT LOUVER LOW IN WALL AT APPROXIMATELY 24" A.F.F.
16. CO SENSOR FOR SHOP VENTILATION TO INCLUDE EF-2 AND L-1. MOUNT AT 10'-0" A.F.F.
17. 3" EXHAUST LINE WITH WIDE RADIUS ELBOWS
18. 3" COMBUSTION AIR LINE WITH WIDE RADIUS ELBOWS.
19. 10x8 OUTSIDE AIR DUCT.
20. CONNECT OUTSIDE AIR DUCT TO LOUVER L-3.
21. PROVIDE STACK WITH CAP FOR COMBUSTION AIR IN MECHANICAL ROOM.
22. PROVIDE FLEXIBLE CONNECTION.
23. OPENING MUST BE WITHIN 12" OF HIGHEST POINT OF CEILING.
24. FLUE FROM WATER HEATER. ROUTE AROUND DUCT AND EXTEND THROUGH ROOF. MAINTAIN ALL MINIMUM FLUE SLOPES. SEE DETAIL 8, SHEET M-202.
25. COORDINATE MOUNTING HEIGHT WITH ARCHITECTURAL PLANS.

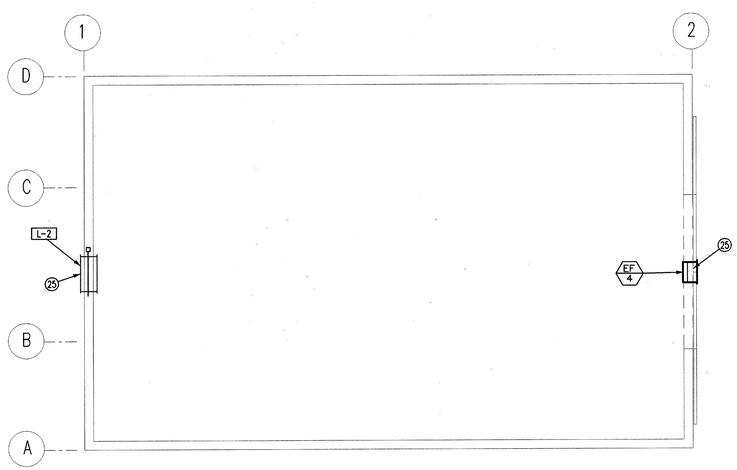

SALT STORAGE SHED

SCALE: 1/8" = 1'-0"

NORTH

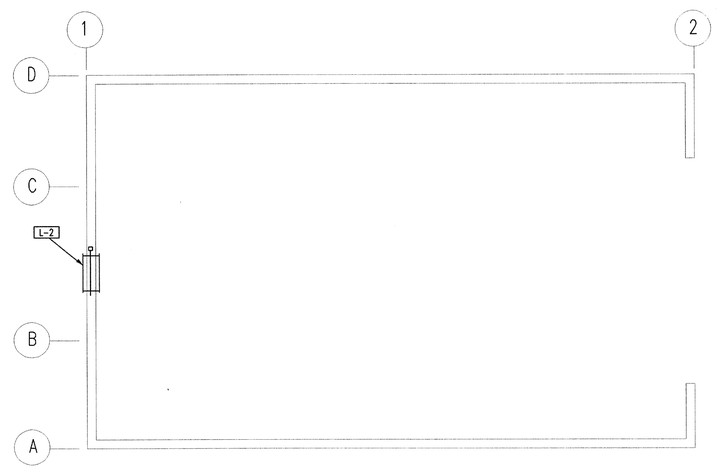

SALT STORAGE SHED

SCALE: 1/8" = 1'-0"

NORTH

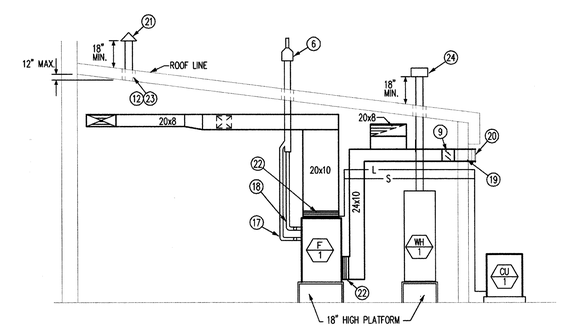

MECHANICAL ROOM SECTION

SCALE: 1/4" = 1'-0"

A M-101

Utah Department of Transportation
Maintenance Facility

ISSUE

Mechanical Floor Plan

M-101

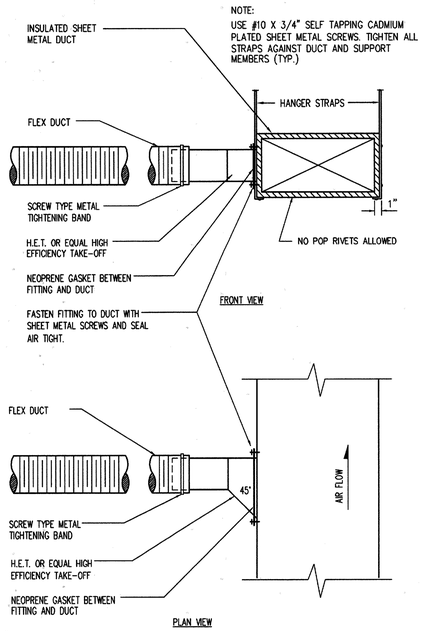

FLEX DUCT WITH HIGH EFFICIENCY TAKE OFF

NO SCALE

7

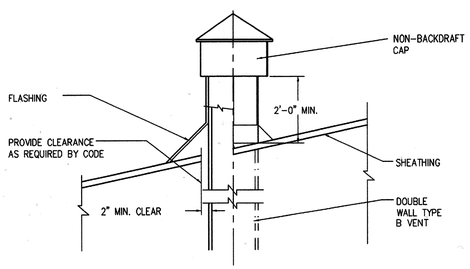

FLUE THRU ROOF

NO SCALE

8

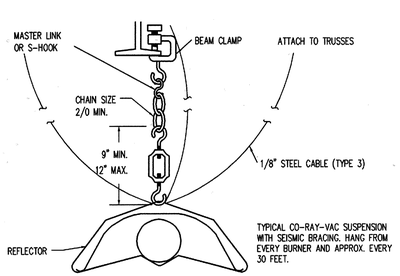

RADIANT HEATER SEISMIC DETAIL

NO SCALE

9

HANGER SIZES FOR RECTANGULAR DUCT			
MAX SIDE	HANGER	HORIZONTAL SUPPORT ANGLE	MAXIMUM SPACING
30"	1" X 18" GAGE STRAP	NONE REQUIRED	10'-0"
36"	1/4" ROUND ROD	1 1/2"X 1 1/2"X 1/8"	8'-0"
48"	1/4" ROUND ROD	2" X 2" X 1/8"	8'-0"
60"	5/16" ROUND ROD	2" X 2" X 1/8"	8'-0"
84"	3/8" ROUND ROD	2" X 2" X 1/8"	8'-0"

NOTE:

ALL SUPPLY AIR DUCT SHALL BE WRAPPED EXTERNALLY AS PER SPECIFICATIONS.

NO POP RIVETS ALLOWED

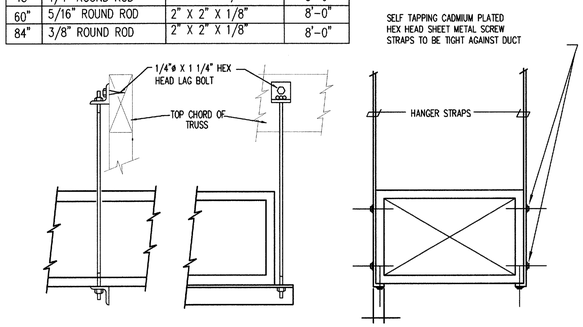

DUCT STRAP HANGER DETAIL

SCALE : NO SCALE

4

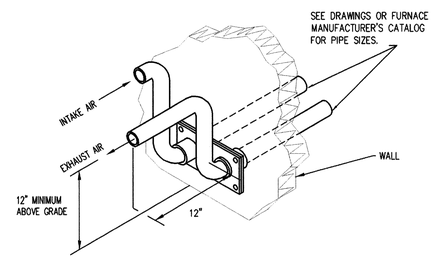

VENT AND COMBUSTION AIR

NO SCALE

5

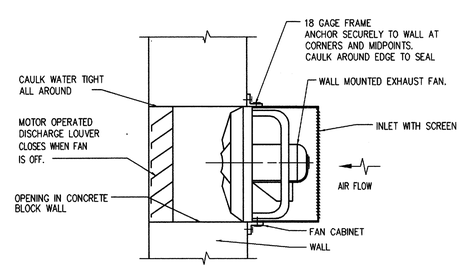

WALL EXHAUST FAN

NO SCALE

6

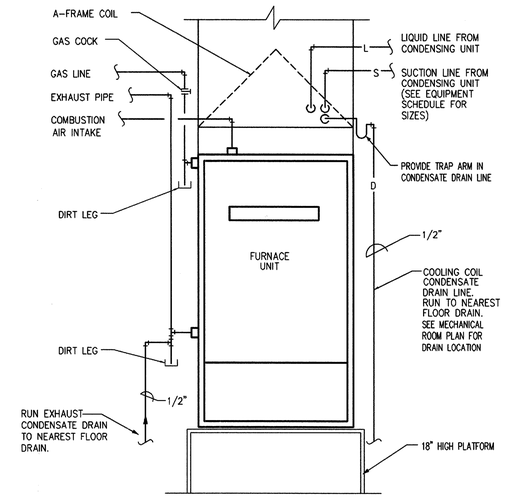

FURNACE PIPING

NO SCALE

1

METAL FASTENERS :
OMARK INSUL-PINS, DURA DYNE FASTENERS OR GRIP NAILS. GRIP NAILS SHALL BE INSTALLED BY "GRIP NAIL AIR HAMMER" OR BY AUTOMATIC FASTENER EQUIP.

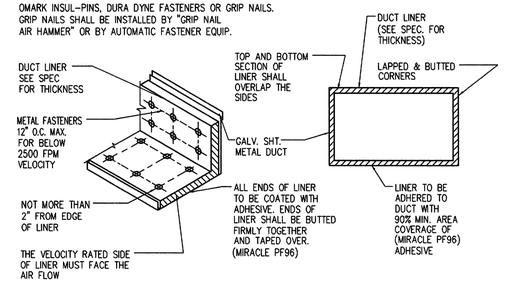

DUCT LINER

NO SCALE

2

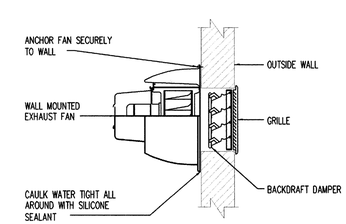

WALL EXHAUST FAN

NO SCALE

3

Utah Department of Transportation
Maintenance Facility

ISSUE

Mechanical Details

M-201

PANELBOARD SCHEDULE

PANEL 'A' TYPE HCN I-LINE 120/208 VOLTS 3 Ø 4 W

MOUNTING ☐ FLUSH ☒ SURFACE DIMENSIONS 26" W / 6 1/2" D / 63" H LOCATION MECH. RM. 400 AMP. MAINS ☐ LUGS ☒ BREAKER

BRANCH BREAKERS

ITEM	AMPS	POLE	WIRE SIZE	CIR. NO.	LEFT PHASE LOAD A	LEFT PHASE LOAD B	LEFT PHASE LOAD C	RIGHT PHASE LOAD A	RIGHT PHASE LOAD B	RIGHT PHASE LOAD C	CIR. NO.	AMPS	POLE	WIRE SIZE	ITEM
RECEPTACLES	20	1	12	1	600						2	20	1		SPARE
RECEPTACLES				3		800					4				
E.V.C.				5			320				6				
RECEPTACLES				7	800			600			8	20	1	12	RECEPTACLES
				9		800					10	20	1		SPARE
				11			720				12	20	1		SPARE
				13	540			3840			14	60	2	6	WELDER
SPECIAL PURP. RECEP.	30	2	10	15		1000			3840		16	-	-	-	-
-	-	-	-	17			1000			1200	18	25	2	12	CU-1
RECEPTACLES	20	1	12	19	540			1200			20	-	-	-	
RECEPTACLES	20	1	12	21		540					22	50	1		SPACE
AC-1	60	3	8	23			3864				24	50	1		SPACE
-	-	-	-	25	3864			15550			26	225	3	4/0	PANEL 'D'
-	-	-	-	27		3864			15550		28	-	-	-	-
TVSS	50	3	8	29						17130	30	-	-	-	-
-	-	-	-	31				12508			32	225	3	4/0	PANEL 'B'
-	-	-	-	33					10936		34	-	-	-	-
SPARE	20	1		35						11687	36	-	-	-	-
				37				3329			38	100	2	1	PANEL 'C'
				39					1960		40	-	-	-	-
				41							42	50	1		SPACE
					6144	6804	5904	37027	32286	30017					
					43171	39090	35921	TOTAL							
					360	326	299	AMPS./PHASE							

FEEDER: ☐ TOP ☒ BOTTOM

TOTAL CONNECTED LOAD 112,352 312 AMPS

CONDUIT SIZE 4" WIRE SIZE 4# 500 XHHW CU.

EQUIPMENT RATING 22,000 AMPS RMS SYM.

PANELBOARD SCHEDULE

PANEL 'B' TYPE NQOD 120/208 VOLTS 3 Ø 4 W

MOUNTING ☐ FLUSH ☒ SURFACE DIMENSIONS 20" W / 5 3/4" D / 36" H LOCATION MECH. RM. 225 AMP. MAINS ☒ LUGS ☐ BREAKER

BRANCH BREAKERS

ITEM	AMPS	POLE	WIRE SIZE	CIR. NO.	LEFT PHASE LOAD A	LEFT PHASE LOAD B	LEFT PHASE LOAD C	RIGHT PHASE LOAD A	RIGHT PHASE LOAD B	RIGHT PHASE LOAD C	CIR. NO.	AMPS	POLE	WIRE SIZE	ITEM
LIGHTING	20	1	12	1	1260			400			2	20	1	12	TELEPHONE BOARD
				3		1260			1080		4				RECEPTACLES
				5			1260			900	6				RECEPTACLES
				7	1260			1000			8				REFRIGERATOR
				9		1260			400		10				RECEPTACLES
				11			1470			2250	12	35	3	10	HOIST
				13	910			2250			14	-	-	-	-
				15		1050			2250		16	-	-	-	-
EXT. LTG.	20	2	10	17			600			500	18	20	1	12	LOUVER
EXT. LTG.	-	-	-	19	577			940			20	20	3	12	EF-2 EXHAUST FAN
EXT. LTG.	20	2	8	21		880			940		22	-	-	-	-
-	-	-	-	23			880			940	24	-	-	-	-
LTG. CNTRL. PANEL	20	1	12	25	820			1660			26	20	1	12	F-1
SNOWMELT CONT. PNL	20	1	12	27		100			250		28	20	1	12	EF-1, EF-3
SPARE	20	2		29						1080	30	20	2	12	EWH-1
	-	-		31				1080			32	-	-	-	-
CO SENSOR	20	1	12	33		50			495		34	20	1	10	RACK LIGHTS
SPARE	20	1		35						600	36	20	1	10	RECEPTACLES
				37							38	20	1		SPARE
				39					3600		40	70	2	3	SALINE VAULT PUMP
				41						3600	42	-	-	-	-
					4827	4600	4210	7330	9015	9870					
					12157	13615	14080	TOTAL							
					101	113	117	AMPS./PHASE							

FEEDER: ☐ TOP ☒ BOTTOM

TOTAL CONNECTED LOAD 39,852

CONDUIT SIZE 2 1/2" WIRE SIZE 4# 4/0 THHN CU. & 1 #4 GND.

EQUIPMENT RATING 22,000 AMPS RMS SYM.

* PROVIDE SHUNT TRIP CIRCUIT BREAKER

GENERAL NOTES

1. CONSULT ARCHITECTURAL REFLECTED CEILING PLANS FOR EXACT LOCATION AND QUANTITY OF ALL LIGHTING FIXTURES.
2. VERIFY ALL EQUIPMENT DIMENSIONS AND LOCATIONS BEFORE BEGINNING ROUGH-IN. CONSULT ALL APPLICABLE CONTRACT DRAWINGS AND SHOP DRAWINGS TO INSURE NEC CODE CLEARANCES REQUIRED AROUND ALL ELECTRICAL EQUIPMENT.
3. CONTRACTOR SHALL VERIFY ALL ELECTRICAL LOADS (VOLTAGE, PHASE, CONNECTION REQUIREMENTS, ETC) OF EQUIPMENT FURNISHED UNDER DIVISION 15 WITH APPROVED MECHANICAL SHOP DRAWINGS BEFORE BEGINNING ROUGH-IN.
4. SEE SECTION 16510 OF THE SPECIFICATION FOR REQUIRED COORDINATION MEETINGS WITH MECHANICAL AND CEILING CONTRACTORS.
5. SEE APPLICABLE SHOP DRAWINGS FOR ROUGH-IN LOCATION OF ALL EQUIPMENT, WIRING DEVICES, ETC. WHERE APPLICABLE MOUNT ALL WIRING DEVICES ABOVE BACKSPLASH EXCEPT THOSE SERVING UNDER COUNTER EQUIPMENT.
6. SEE SPECIFICATION FOR ENERGY SAVING LAMP AND BALLAST REQUIREMENTS.
7. FINISHES OF ALL LIGHT FIXTURES SHALL BE SELECTED BY ARCHITECT.
8. THE ELECTRICAL CONTRACTOR SHALL NOTIFY AND COOPERATE WITH THE MECHANICAL CONTRACTOR SUCH THAT NO PIPING, DUCTS, OR EQUIPMENT FOREIGN TO THE OPERATION OF THE ELECTRICAL EQUIPMENT SHALL BE PERMITTED TO BE INSTALLED IN, ENTER OR PASS THRU ELECTRICAL ROOMS OR SPACES, OR ABOVE OR BELOW ELECTRICAL EQUIPMENT IN OTHER AREAS.
9. ELECTRICAL BOXES SHALL NOT BE LOCATED IN MASONARY COLUMNS IN BRICK WALLS OR IN GROUTED CELLS ADJACENT TO OPENINGS. COORDINATE LOCATION OF BOXES WITH MASONRY CONTRACTOR.
10. ALL PENETRATIONS OF FIRE RATED FLOORS, WALLS, AND CEILINGS SHALL BE SEALED WITH APPROVED MATERIAL TO MAINTAIN FIRE RATING OF SURFACE PENETRATED.

PANELBOARD SCHEDULE

PANEL 'C' (ALTERNATE) TYPE QO LOAD CENTER NEMA 3R 120/208 VOLTS 1 Ø 3 W

MOUNTING ☐ FLUSH ☒ SURFACE DIMENSIONS 14" W / 4 1/2" D / 19" H LOCATION SALT STORAGE 100 AMP. MAINS ☐ LUGS ☒ BREAKER

BRANCH BREAKERS

ITEM	AMPS	POLE	WIRE SIZE	CIR. NO.	LEFT PHASE LOAD A	LEFT PHASE LOAD B	LEFT PHASE LOAD C	RIGHT PHASE LOAD A	RIGHT PHASE LOAD B	RIGHT PHASE LOAD C	CIR. NO.	AMPS	POLE	WIRE SIZE	ITEM
INTERIOR LIGHTING	20	1	12	1	1320						2	20	1		SPARE
EXTERIOR LIGHTING	20	1	12	3		330			200		4	20	1	12	RECEPTACLES
DH-1	20	1	12	5	1175			830			6	20	2	12	EF-4 EXHAUST FAN
DH-1	20	1	12	7		600			830		8	-	-	-	-
SPACE	20	1		9							10	20	1		SPARE
SPACE	20	1		11							12	20	1		SPARE
				13							14				
				15							16				
				17							18				
				19							20				
				21							22				
				23							24				
				25							26				
				27							28				
				29							30				
				31							32				
				33							34				
				35							36				
				37							38				
				39							40				
				41							42				
					2499	930		830	1030						
					3329	1960		TOTAL							
					28	16		AMPS./PHASE							

FEEDER: ☐ TOP ☒ BOTTOM

TOTAL CONNECTED LOAD 5784 15 AMPS

CONDUIT SIZE 2" WIRE SIZE 3# 1 THWN CU. & 1 #6 GND.

EQUIPMENT RATING 22,000 AMPS RMS SYM.

PANELBOARD SCHEDULE

PANEL 'D' TYPE NQOD 120/208 VOLTS 3 Ø 4 W

MOUNTING ☐ FLUSH ☒ SURFACE DIMENSIONS 20" W / 5-3/4" D / 36" H LOCATION MECH. RM. 225 AMP. MAINS ☒ LUGS ☐ BREAKER

BRANCH BREAKERS

ITEM	AMPS	POLE	WIRE SIZE	CIR. NO.	LEFT PHASE LOAD A	LEFT PHASE LOAD B	LEFT PHASE LOAD C	RIGHT PHASE LOAD A	RIGHT PHASE LOAD B	RIGHT PHASE LOAD C	CIR. NO.	AMPS	POLE	WIRE SIZE	ITEM
DH-1	20	1	12	1	1175			360			2	20	1	12	RH-1
				3		1175			360		4				RH-1
				5			1175			360	6				RH-1
				7	1175			360			8				RH-1
				9		1175			240		10				RH-1
				11			1175				12				SPARE
				13	1175			970			14	20	1	12	LIGHTING
				15		1175			970		16				LIGHTING
LIFT SYSTEM	90	3	4	17			5795			1450	18				LIGHTING
-	-	-	-	19	5795			330			20				UNIT HEATER
-	-	-	-	21		5795			900		22				RECEPTACLES
WASH RACK RECEP	20	1	10	23			1000			1500	24				BLOCK HEATER
WASH RACK RECEP	40	2	8	25	1500			1500			26				
-	-	-	-	27		1500			1500		28				
DH-1	20	1	12	29			1175			1500	30				
POLE RECEP.	20	1	10	31	400						32				SPARE
SPARE				33							34				SPARE
SPARE				35						1000	36	30	2	10	SNOWMELT (GFI) *
DH-1			12	37	1175			1000			38	-	-	-	-
DH-1	20		12	39		1175			1000		40	30	2	10	SNOWMELT (GFI) *
SPARE	20			41						1000	42	-	-	-	-
					12398	11995	10320	3520	4970	6810					
					15918	16965	17130	TOTAL							
					133	142	143	AMPS./PHASE							

FEEDER: ☐ TOP ☒ BOTTOM

TOTAL CONNECTED LOAD 50,013

CONDUIT SIZE 2-1/2" WIRE SIZE 4# 4/0 THHN CU. & 1 #4 GND.

EQUIPMENT RATING 22,000 AMPS RMS SYM.

* GFI WITH 30A MILLIAMP GROUND FAULT TRIP

FIXTURE SCHEDULE

TYPE	MANUFACTURER	CATALOG NO.	MOUNTING	LAMPS
A	LITHONIA	AW432-120-GEB-10.2/2	SURFACE	(4) F032/735 T8
B	PRUDENTIAL	P-1852-48CT3-PRA-120	WALL @ CLG.	(2) F032/735 T8
C	LITHONIA	TWH-250M-120-TWH-WC	SURFACE	(1) M/250/V
D	LITHONIA	AW-232-120-GEB-10	SURFACE	(2) F032/735 T8
E	LITHONIA	EJA-296-HO-120-GEB-HC	CHAIN	(2) F96/T12/CW/HO/SS
E1	LITHONIA	EJA-296-HO-120-CW 20ø	SURFACE	(2) F96/T12/CW/HO/SS
F	NOT USED			
G	LITHONIA	TWP-150S-208-DF-DMB	WALL	(1) LU/150/C
G1	LITHONIA	VR3C-70S-208-DF-DMB	CEILING	(1) LU/70/MED
H	NOT USED			
I1	MONARCH	KSF2-400S-R4-208-SPD09-DMB-DF SSS-30-5G-DM19-DMB	POLE	(1) LU 400
I2	MONARCH	(2) KSF2-400S-R4-208-SPD09-DMB-DF SSS-30-5G-DM28-DMB	POLE	(2) LU 400
I3	ITT	13-56262-AJ WITH INTEFRAL PHOTOCELL	2" RIGID CONDUIT	(1) LU 150
X1	LITHONIA	LESWIG-120/277-ELN	UNIVERSAL	INCLUDED

ELECTRICAL SYMBOL SCHEDULE

1. SEE FIXTURE SCHEDULE FOR TYPE, MOUNTING AND WATTAGE.
2. WIRED FROM ADJACENT OUTLET BOX.
3. REFER TO DRAWINGS FOR DIRECTIONAL ARROWS.
4. SUBSCRIPT KEYS SWITCH TO FIXTURES CONTROLLED.
5. NEMA TYPE 'ND' NON-FUSED UNLESS NOTED 'F' (FUSED). USE 'HD' 480 V.
6. SEE SPECS FOR SIZE AND/OR TYPE.
7. PROVIDE H.O.A. AND S.S. PUSHBUTTONS AS REQUIRED.
8. DOUBLE ARROWS DENOTE A DOUBLE FACE UNIT.
9. COORDINATE WITH SHOP DRAWINGS.
10. SUBSCRIPT DENOTES NEMA CONFIGURATION.
11. HEIGHT MEASURED FROM BOTTOM OF BOX.

STANDARD MOUNTING HEIGHT UNLESS OTHERWISE NOTED ON PLANS

SYMBOL	DESCRIPTION	MOUNTING HEIGHT	NOTES
	ONE CIRCUIT, TWO WIRE HOME RUN TO PANEL		
	2 CIRCUIT, 3 WIRE, COMMON NEUTRAL HOME RUN		
	3 CIRCUIT, 4 WIRE, COMMON NEUTRAL HOME RUN		
	CONDUIT RUN CONCEALED IN WALL OR CEILING		
	CONDUIT RUN CONCEALED IN FLOOR OR GROUND		
	CONDUIT UP		
	CONDUIT DOWN		
	CEILING LIGHT OUTLET	CEILING	1.
	WALL LIGHT OUTLET	AS NOTED	1.
	FLUORESCENT LIGHT FIXTURE	AS NOTED	1
	FLUORESCENT EGRESS LIGHT FIXTURE	AS NOTED	UNSWITCHED
	CEILING MOUNTED EXIT LIGHT	CEILING	1.3.8.
	WALL MOUNTED EXIT LIGHT	AS NOTED	1.3.8.
$	SINGLE POLE SWITCH	+4'-0"	11.
$3	THREE-WAY SWITCH	+4'-0"	11.
$T	THERMAL OVERLOAD SWITCH WITH PILOT LIGHT	+4'-0"	SQ.D 2510. 11.
	DUPLEX RECEPTACLE	+16"	11.
A	DUPLEX RECEPTACLE		9.
W	ELECTRIC WATER COOLER RECEPTACLE		SEE DETAIL 01/E501
WP	WEATHERPROOF RECEPTACLE	+24"	P&S WPD-8
	GROUND FAULT INTERRUPTER DUPLEX RECEPTACLE		9.
	FOURPLEX RECEPTACLE		9.
	SPECIAL PURPOSE OUTLET	+16" OR AS NOTED	10. WITH CAP. 11.
	DATA OUTLET	+16"	11.
	TELEPHONE OUTLET	+16"	11.
J	JUNCTION BOX ('F' IN FLOOR)	AS NOTED	
	MOTOR OUTLET	TO SUIT EQUIP.	
P	PHOTO-ELECTRIC CONTROL	AS NOTED	TORK 2100A
LT	LIGHTING CONTROL PANEL	+5'-0"	ASCO#6415043C
	PUSHBUTTON	+4'-6"	
F	FUSED DISCONNECT SWITCH	+5'-0"	SQ.D GEN. DUTY 5
	MAGNETIC STARTER / FUSED COMBINATION	+5'-0"	SQ.D 8538 7
	PANEL BOARD	TOP AT +6'-0"	
	TELEPHONE TERMINAL BOARD		
842	ARCHITECTURAL ROOM NUMBER		
A	LIGHT FIXTURE (LETTER DESIGNATES TYPE)		
D3 15	EQUIPMENT NUMBER		

EQUIPMENT SCHEDULE

NOTES:

1. MAGNETIC STARTER
2. MANUAL STARTER
3. DISCONNECT SWITCH
4. DIRECT CONNECTION

A. FURNISHED AND INSTALLED BY OTHERS
B. FURNISHED BY OTHERS, INSTALLED UNDER DIVISION 16
C. FURNISHED AND INSTALLED UNDER DIVISION 16

UNIT #	FUNCTION	LOAD	VOLTS	PHASE	FULL LOAD AMPS	CONDUIT SIZE	WIRES NO.	WIRES SIZE	BKRS POLE	BKRS AMPS	STARTER	DISC. SWITCH	NOTE #	REMARKS
AC-1	AIR COMP.	10 HP	208	3	32.2	1	3	8	3	60			1C	
CU-1	COND. UNIT		208	1	18.4	3/4	2	10	2	25			3C	
EF-1	EXHAUST FAN	130W	120	1	1	3/4	2	12	1	20			2C	
EF-2	EXHAUST FAN	2 HP	208	3	7.82	3/4	3	12	3	25			1C	
EF-3	EXHAUST FAN	130W	120	1	1.1	3/4	2	12	1	20			2C	
EF-4	EXHAUST FAN	1 HP	208	1	8	3/4	2	12	2	20			1C	
EWH-1	ELEC. HEATER	8.5 A	208	1	8.5 A	3/4	2	12	2	20			4C	
F-1	FURNACE	3/4 HP	120	1	13.8	3/4	2	12	1	25			2C	
OH-1	OVERHEAD DOOR	1/2 HP	120	1	9.8	3/4	2	12	1	20			2C	
RH-1	RADIANT HEATER	1.0 A	120	1	1	3/4	2	12	1	20			2C	
UH-1	UNIT HEATER	1/8 HP	120	1		3/4	2	12	2	20			2C	
	SALINE VAULT PUMP		240	1	30A	1-1/4	2	2	2	50			1B	

Utah Department of Transportation
Maintenance Facility

ISSUE

SCHEDULES & NOTES

E-001

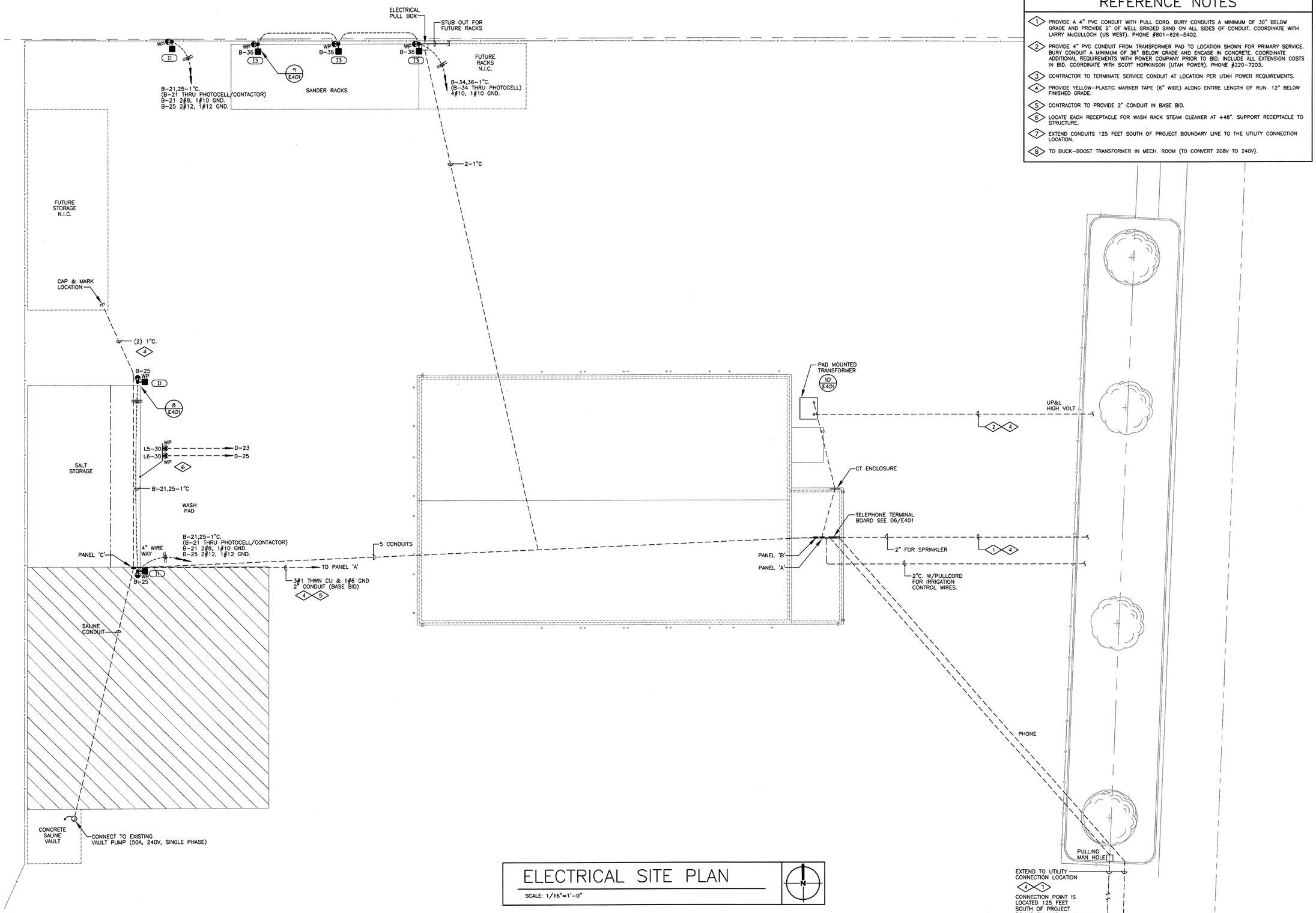

ELECTRICAL SITE PLAN

SCALE: 1/16"=1'-0"

REFERENCE NOTES

1. PROVIDE A 4" PVC CONDUIT WITH PULL CORD. BURY CONDUITS A MINIMUM OF 30" BELOW GRADE AND PROVIDE 2" OF WELL GRADED SAND ON ALL SIDES OF CONDUIT. COORDINATE WITH LARRY McCULLOCH (US WEST). PHONE #801-626-5402.
2. PROVIDE 4" PVC CONDUIT FROM TRANSFORMER PAD TO LOCATION SHOWN FOR PRIMARY SERVICE. BURY CONDUIT A MINIMUM OF 36" BELOW GRADE AND ENCASE IN CONCRETE. COORDINATE ADDITIONAL REQUIREMENTS WITH POWER COMPANY PRIOR TO BID. INCLUDE ALL EXTENSION COSTS IN BID. COORDINATE WITH SCOTT HOPKINSON (UTAH POWER). PHONE #220-7203.
3. CONTRACTOR TO TERMINATE SERVICE CONDUIT AT LOCATION PER UTAH POWER REQUIREMENTS.
4. PROVIDE YELLOW-PLASTIC MARKER TAPE (6" WIDE) ALONG ENTIRE LENGTH OF RUN. 12" BELOW FINISHED GRADE.
5. CONTRACTOR TO PROVIDE 2" CONDUIT IN BASE BID.
6. LOCATE EACH RECEPTACLE FOR WASH RACK STEAM CLEANER AT +48". SUPPORT RECEPTACLE TO STRUCTURE.
7. EXTEND CONDUITS 125 FEET SOUTH OF PROJECT BOUNDARY LINE TO THE UTILITY CONNECTION LOCATION.
8. TO BUCK-BOOST TRANSFORMER IN MECH. ROOM (TO CONVERT 208V TO 240V).

Utah Department of Transportation
Maintenance Facility

ISSUE

ELECTRICAL SITE PLAN

E-101

REFERENCE NOTES

1. CONNECT EXIT LIGHT INTO UNSWITCHED CONDUCTOR OF NEAREST 120V LIGHTING CIRCUIT.
2. PROVIDE EMERGENCY BATTERY PACK EQUAL TO LITHONIA PS1100 AND CAPABLE OF EMERGENCY OPERATION OF (2) F40 FLOURESCENT LAMPS FOR A MINIMUM OF 90 MINUTES UPON INTERRUPTION OF NORMAL POWER.
3. LIGHTING CONTROL PANEL (LT). INTERCONNECT PHOTO CELL TO (LT) PANEL FOR CONTROL OF LIGHTING CIRCUITS B-17,21. LOCATE PHOTO CELL ON ROOF. VERIFY EXACT LOCATION WITH ARCHITECT.
4. PROVIDE SWAY BRACING ON ALL CHAIN MOUNTED LIGHT FIXTURES IN MAINTENANCE BAY. ATTACH A MINIMUM OF (3) 12 GAUGE STEEL WIRES TO EACH FIXTURES TO ELIMINATE THE POSSIBILITY OF FIXTURES SWINGING INTO STRUCTURAL MEMBERS PIPING ETC.
5. DUAL LEVEL SWITCHING. SWITCH INBOARD AND OUTBOARD LAMPS SEPARATELY.

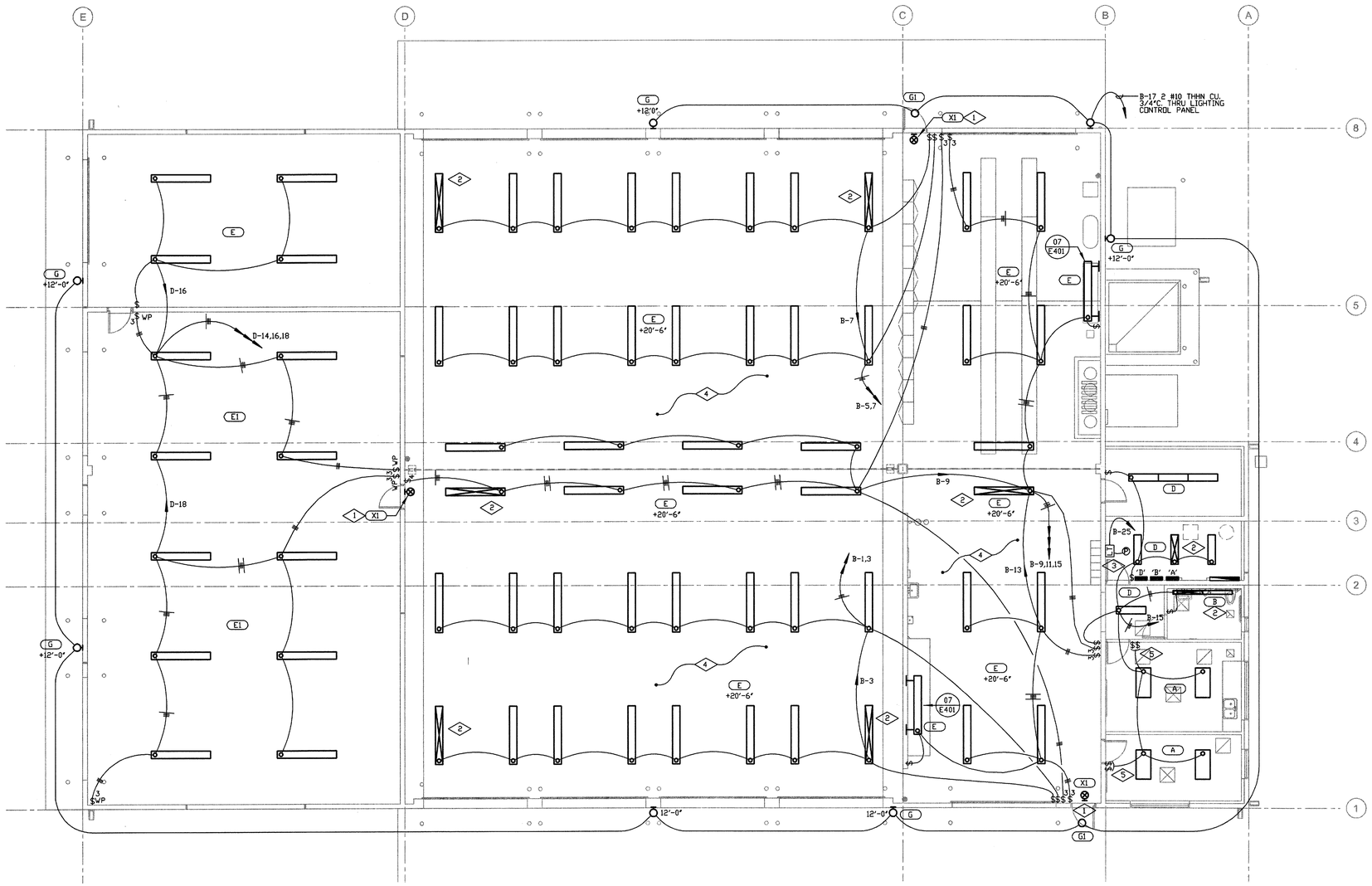

LIGHTING PLAN

SCALE: 1/8"=1'-0"

Utah Department of Transportation
Maintenance Facility

ISSUE

LIGHTING PLAN

E-201

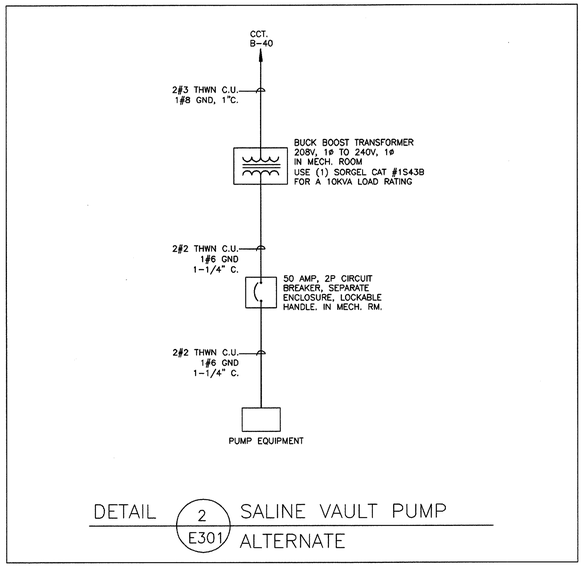

DETAIL 2/E301 SALINE VAULT PUMP ALTERNATE

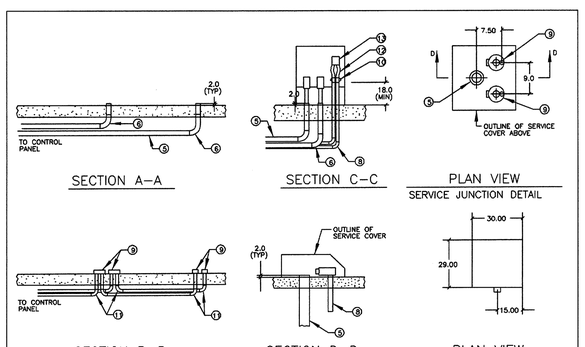

TYPICAL MATERIALS LIST

ITEM	DESCRIPTION	REF. MFG./PART NO.	MATERIAL
13	4x4x2 NEMA 12 JUNCTION BOX TYPICAL		STEEL
12	SEALTITE FLEXIBLE METAL CONDUIT		STEEL
11	1-1/2" GRS ELBOW	CROUSE-HINDS ST229	STEEL
10	1-1/2" SEAL BARRIER	CROUSE-HINDS ET52	STEEL
9	1-1/2" BUSHING	CROUSE-HINDS GUAB24	STEEL
8	1-1/2" RIGID CONDUIT GRS		STEEL
6	4" SCH 40 STREET ELBOW		PVC OR STEEL
5	4" SCH 40 PIPE		PVC OR STEEL

DETAIL 01/E301 LIFT SYSTEM BELOW GRADE SERVICE

LI001-CD

REFERENCE NOTES

1. PROVIDE FINAL ELECTRICAL CONNECTION TO AUTOMATIC SAFETY SWITCH IN DOOR BOTTOM AND START-STOP PUSH-BUTTON PROVIDED BY OVERHEAD DOOR MANUFACTURER.
2. PROVIDE 50 AMP 2 POLE 3 WIRE TWIST-LOCK RECEPTACLE AND PLUG WITH POLYCARBONATE COVER PLATE.
3. PROVIDE 30 AMP 2 POLE 3 WIRE TWIST-LOCK RECEPTACLE AND PLUG WITH POLYCARBONATE COVER PLATE.
4. LOCATE STARTER FOR EF-2 IN MECH. ROOM. PROVIDE WITH H.O.A. SELECTOR SWITCH.
5. NOT USED.
6. NOT USED.
7. CONCEAL ALL CONDUITS BELOW GRADE.
8. PROVIDE 1 1/2" SEAL OFFS AND SEALTITE FLEXIBLE METAL CONDUIT AT +18" A.F.F.
9. 1 1/2" EXPLOSION PROOF (CLASS I, DIV. I) ELBOW BELOW GRADE WITH EXPLOSION PROOF (CLASS I, DIV.I) BOX FLUSH WITH TOP OF CONCRETE.
10. 1 1/2" RIGID ELBOW BELOW GRADE WITH EXPLOSION PROOF BOX FLUSH WITH TOP OF CONCRETE.
11. CONTROL PANEL PROVIDED AND INSTALLED BY OTHERS.
12. CONCRETE TRANSFORMER PAD BY DIVISION 16. TRANSFORMER PROVIDED AND INSTALLED BY POWER COMPANY. COORDINATE SIZE AND REQUIREMENTS WITH POWER COMPANY PRIOR TO BID AND INCLUDE ALL COSTS IN BID.
13. NEMA 3R CT CABINET AND METER BASE PROVIDED AND INSTALLED BY DIVISION 16, PER EUSERC 329A. COORDINATE EXACT REQUIREMENTS WITH POWER COMPANY PRIOR TO BID.
14. (1) 4" PVC SCHEDULE 40 CONDUIT AND SECONDARY CONDUCTORS BY DIVISION 16. PROVIDE A MINIMUM 24" RADIUS FOR CONDUIT BENDS.
15. PROVIDE (A)30) SS W/ 25 FRN FUSE DISCONNECT FOR OVERHEAD ELECTRICAL HOIST. EXTEND 3 #10 AND 1 #10 GROUND TO JUNCTION BOX ADJACENT TO HOIST CONDUCTOR SYSTEM. EXTEND LIQUID TIGHT FLEXIBLE CONDUIT FROM JUNCTION BOX TO CONDUCTOR SYSTEM. FINAL ELECTRICAL CONNECTIONS TO CONDUCTOR SYSTEM HOIST AND CONTROL SYSTEM PROVIDED BY HOIST INSTALLER.

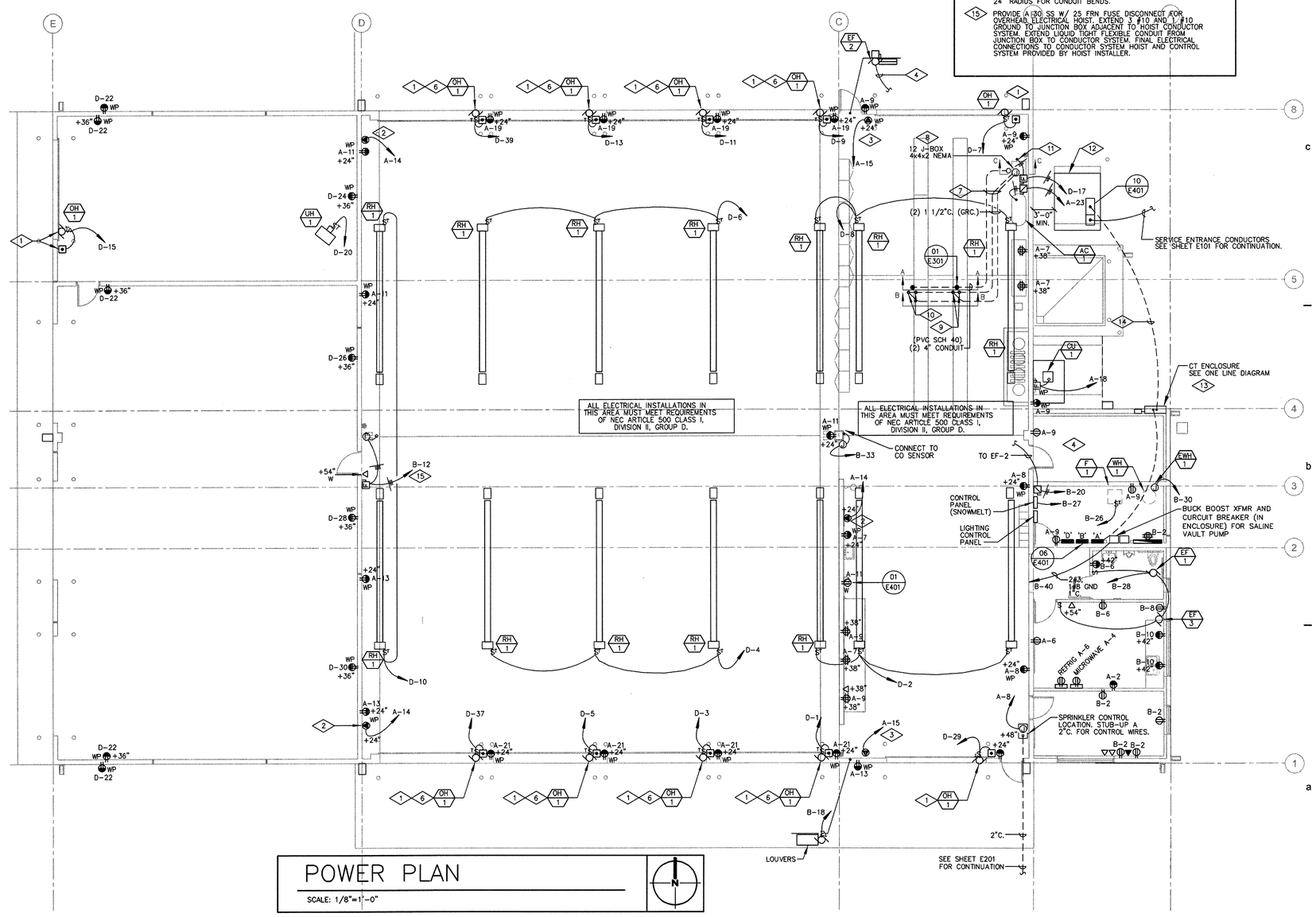

POWER PLAN

SCALE: 1/8"=1'-0"

Utah Department of Transportation
Maintenance Facility

ISSUE

POWER PLAN

E-301

GENERAL AND INSTALLATION NOTES

LOCATE AIR TERMINALS AS SHOWN. TAKE CARE TO INSURE THAT ALL POINTS ARE WITHIN 2'-0" OF OUTSIDE BUILDING EDGE, OUTSIDE CORNERS, AND THAT MAXIMUM SPACING DOES NOT EXCEED 20'-0", AND THAT MINIMUM PROTECTION ABOVE OBJECT PROJECTED IS 10".

MAINTAIN HORIZONTAL OR DOWNWARD COURSING OF MAIN CONDUCTOR AND INSURE THAT ALL BENDS HAVE AT LEAST AN 8" RADIUS AND DO NOT EXCEED 90 DEGREE.

SUPPORT ALL EXPOSED ROOF. DOWNLEAD AND BONDING CABLES AT 3'-0" ON CENTER MAXIMUM.

GROUND ELECTRODES SHALL BE INSTALLED AS SHOWN BUT IN NO INSTANCE SHALL THEY BE LESS THAN 1'-0" BELOW GRADE AND 2'-0" FROM FOUNDATION WALL. DRIVEN RODS SHALL PENETRATE EARTH AT LEAST 10'-0".

BOND TO WATER SERVICE AND OTHER PIPING SYSTEMS AS SHOWN AND AS REQUIRED BY CODES.

INTERCONNECT LIGHTNING PROTECTION GROUND TO ELECTRIC, TELEPHONE, AND OTHER BUILDING GROUND SYSTEMS AS SHOWN OR AS REQUIRED BY CODES.

BOND TO METAL BODIES OF CONDUCTANCE ON ROOF WITH MAIN SIZE CONDUCTORS AS SHOWN AND AS REQUIRED BY CODES. THESE BONDS INCLUDE BUT ARE NOT LIMITED TO EXHAUST FANS, VENTS, HANDRAILS, LADDERS, METAL SCREENS AND PANELS, H.V.A.C. UNITS, HATCHES, SKYLIGHTS, COOLING TOWERS, FLAG POLES, ANTENNAS, ETC., OR ANY LARGE METAL BODY SUBJECT TO DIRECT STROKE OR WHICH EXCEEDS THE HEIGHT OF ADJACENT AIR TERMINALS.

BOND TO METAL BODIES OF INDUCTANCE LOCATED WITHIN 6'-0" OF MAIN CONDUCTOR OR OTHER BONDED OBJECT WITH APPROVED SECONDARY BONDING CONDUCTOR AS SHOWN AND AS REQUIRED BY CODES. SUCH OBJECTS INCLUDE BUT ARE NOT LIMITED TO FLASHINGS, METAL COPING CAPS, GRAVEL GUARDS, FASCIAS, ROOF DRAINS, DOWNSPOUTS, INTERIOR DUCTS, MACHINERY OR PIPING, ETC., OR IN GENERAL ANY ISOLATED BODY AT OR BELOW THE ROOF SUBJECT TO INDUCTANCE AND WITHIN 6'-0" OF SYSTEM.

SYSTEM SHALL BE INSTALLED AS SHOWN TO INSURE PROPER CODE COMPLIANCE AND SYSTEM CERTIFICATION. ANY MAJOR VARIANCE SHALL ENTAIL RESUBMITTAL AND NEW APPROVAL.

ALL MATERIALS TO BE UNDERWRITER'S LABORATORIES APPROVED WITH "A" LABELS ON CONDUCTORS AT 10'-0" INTERVALS AND "B" LABELS ON ALL AIR TERMINALS.

COMPLETED INSTALLATION AS SHOWN SHALL BEAR U.L. MASTER LABEL "C" TO BE SECURED BY SYSTEM INSTALLER PER UL96A.

BONDING NOTES

A) ITEMS 1-10 ARE TYPICAL BODIES OF CONDUCTANCE AS NOTED BELOW. USE FULL SIZE MAIN CONDUCTOR AND APPROPRIATE FITTING SHOWN FOR CONNECTION.

B) ITEM 11 (PLUMBING STACK) REQUIRES BONDING WITH MAIN SIZE CABLE ONLY IF WITHIN 6'-0" OF SYSTEM.

C) ITEMS 12-15 ARE TYPICAL BODIES OF INDUCTANCE AS NOTED BELOW. USE SECONDARY SIZE SMALLER CONDUCTOR AND APPROPRIATE FITTING SHOWN FOR CONNECTION. (ITEM 12 TYPICALLY OCCURS AT EACH DOWNLEAD AND ROOF LEVEL CHANGE AS SHOWN).

D) BONDING CONNECTIONS AND FITTINGS SHOWN ARE TYPICAL EXAMPLES MAKE ALL CONNECTIONS REQUIRED TO MEET CODES AS NOTED BELOW. ADJUST FITTING TYPE AS REQUIRED TO SUIT FIELD CONDITIONS.

REFERENCE NOTES

1. LOCATE CONDUCTOR BELOW ROOF LINE AT TOP EDGE OF FASCIA TO MINIMIZE DAMAGE FROM SNOW BUILD UP AND REDUCE NUMBER OF BENDS ALONG STANDING SEAM METAL ROOF.

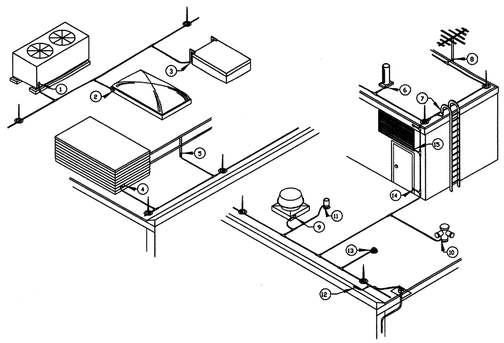

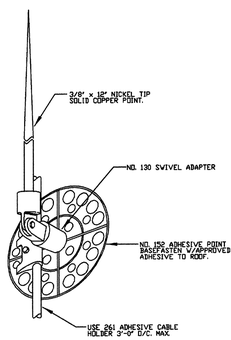

DETAIL (A) AIR TERMINAL

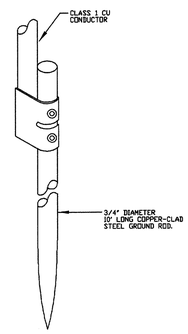

DETAIL (B) GROUND ROD

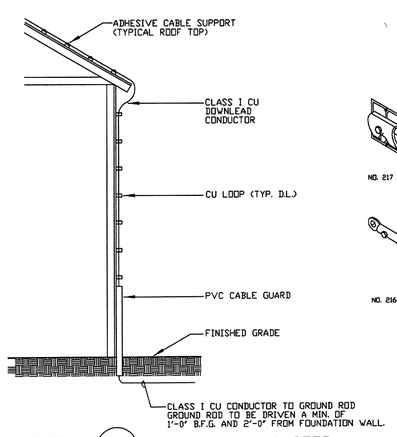

DETAIL (C) DOWNLEAD CONDUCTOR TO GROUND ROD

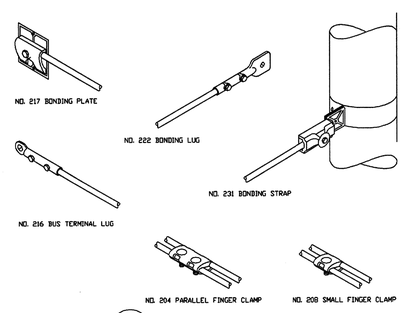

DETAIL (D) BONDING

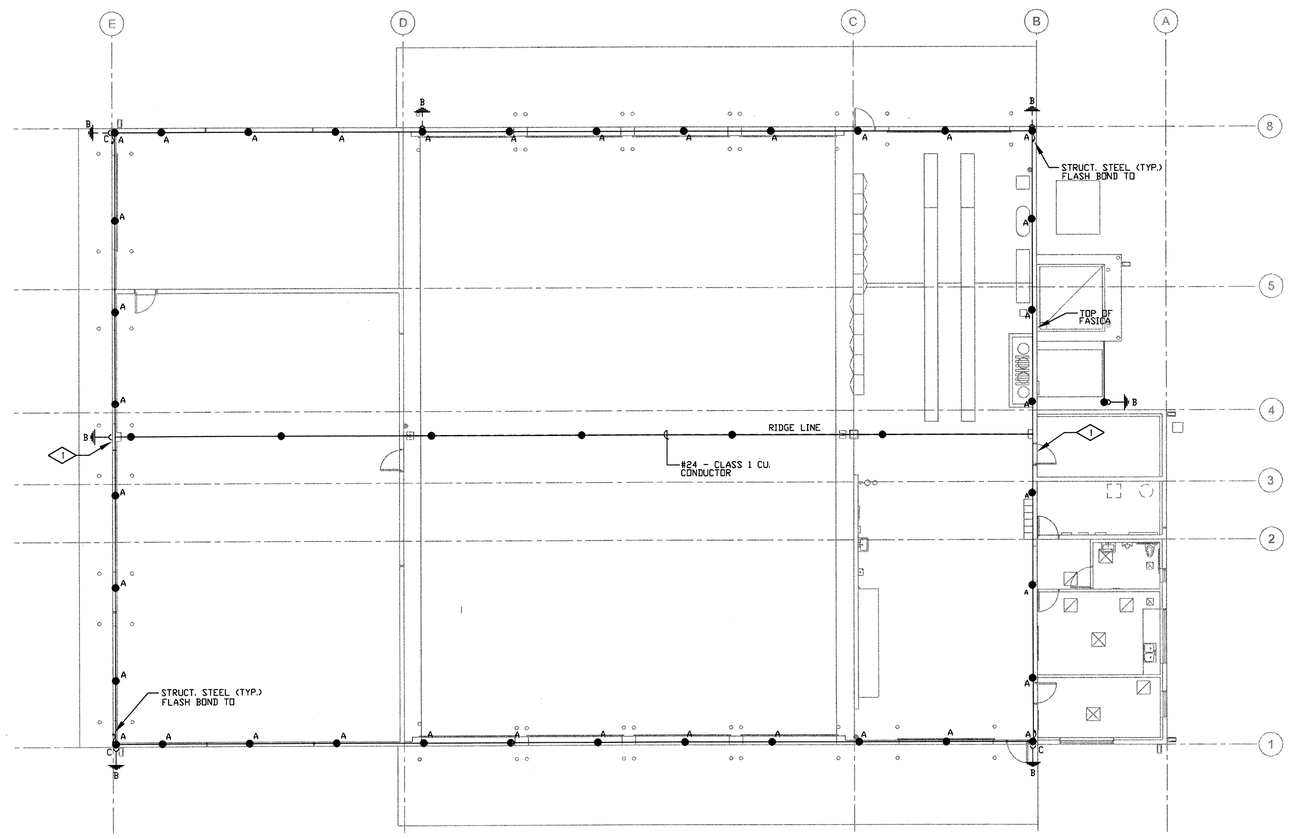

LIGHTNING PROTECTION PLAN

SCALE: 3/32"=1'-0"

Utah Department of Transportation
Maintenance Facility

ISSUE

LIGHTNING PROTECTION PLAN

E-302

REFERENCE NOTES

1. GROUND PANEL IN ACCORDANCE WITH ONE LINE DIAGRAM. SEE SHEET E401.
2. LOCATE STARTER FOR EF-4 AT +42". PROVIDE WITH H.O.A. SELECTOR SWITCH.
3. PROVIDE FINAL ELECTRICAL CONNECTION TO AUTOMATIC SAFETY SWITCH IN DOOR BOTTOM AND START-STOP PUSH BUTTON PROVIDED BY OVERHEAD DOOR MANUFACTURER.

SNOW/ICE MELTING SPECIFICATIONS

PROVIDE SNOW/ICE MELTING CABLE (HEAT TRACE) FOR RAIN GUTTERS AND DOWN-SPOUTS. SEE ATTACHED DRAWING. PROVIDE A SNOW/ICE MELTING CABLE SYSTEM AS FOLLOWS:

PROVIDE SELF REGULATING HEATER CONSISTING OF TWO 16 AWG TINED COPPER BUS WIRES EMBEDDED IN PARALLEL IN A SELF REGULATING POLYMER CORE THAT VARIES ITS POWER OUTPUT TO RESPOND TO TEMPERATURE ALONG ITS ENTIRE LENGTH. THE MAXIMUM SHEATH TEMPERATURE SHALL NOT EXCEED 150 DEGREES F. THE HEATER SHALL BE CAPABLE OF A MAXIMUM INTERMITTENT EXPOSURE TEMPERATURE OF 185 DEGREES F. PROVIDE CABLE RATED 5 WATTS PER FOOT IN OPEN AIR AND 10 WATTS PER FOOT IN SNOW/ICE.

PROVIDE CABLE CAPABLE OF CROSSING OVER ITSELF WITHOUT OVERHEATING. THE HEATER SHALL BE CAPABLE OF BEING CUT TO LENGTH IN THE FIELD AND TERMINATED IN THE FIELD.

PROVIDE CABLE COVERED WITH A THERMOPLASTIC ELATOMER JACKET, PROTECTED WITH A TINNED COPPER OVERBRAID FOR PHYSICAL, AS WELL AS ELECTRICAL GROUNDING PROTECTION. THE OVERALL COVERING SHALL BE A FLUORPOLYMER JACKET FOR CORROSION AND ABRASION RESISTANCE.

THE HEATER, AND COMPONENTS, SHALL BE UL RATED AS A SYSTEM FOR THIS APPLICATION. THE HEATER SHALL BE CAPABLE OF BEING OPERATED AT 208 VAC.

PROVIDE AN AUTOMATIC SNOW/MOISTURE AND TEMPERATURE SENSING CONTROL SYSTEM. SENSOR IS DESIGNED TO LIE IN THE GUTTER OR MOUNT ON THE ROOF AND SENSE PRESENCE OF FREEZING TEMPERATURES AND SNOW/ICE. THIS CONTROLLER ENSURES THE HEAT TRACE SYSTEM ONLY ENERGIZES WHEN THE ABOVE CONDITIONS ARE PRESENT. THE ELECTRONICS PANEL HAS A HAND-OFF-AUTO SELECTOR SWITCH. A USER SETTABLE TIMER KEEPS THE HEATERS ENERGIZED FROM 1/2 HOUR TO 5 HOURS AFTER CESSATION/ABSENCE OF TEMPERATURE AND MOISTURE.

PROVIDE ACCESSORIES AS REQUIRED FOR EACH AREA OF PROTECTION PER MANUFACTURER INSTALLATION INSTRUCTION. PROVIDE POWER CONNECTION/END SEAL KITS (INCLUDING SPLICES) AND SPLICE JUNCTION BOXES WITH COVERS. APPROVED MANUFACTURERS: TECHNITRACE CORP, RAYCHEM.

INSTALL SNOW/ICE MELT CABLE IN ACCORDANCE WITH NEC 427-22, 427-23, 426-53 AND 426-27 (B). BEFORE AND AFTER INSTALLATION, MEGGER THE CABLE AT 2500 VDC FOR 1 MINUTE TO INSURE ELECTRICAL INTEGRITY.

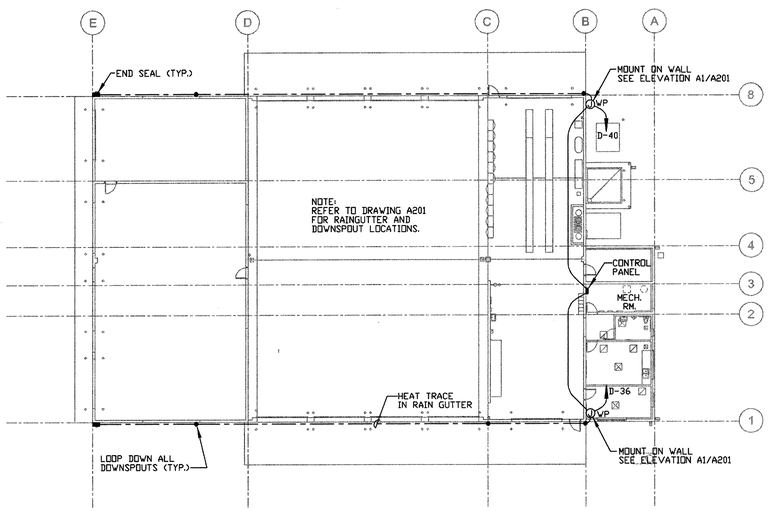

ELECTRICAL PLAN

SCALE: 1"=20'-0" SNOW/ICE MELTING SYSTEM

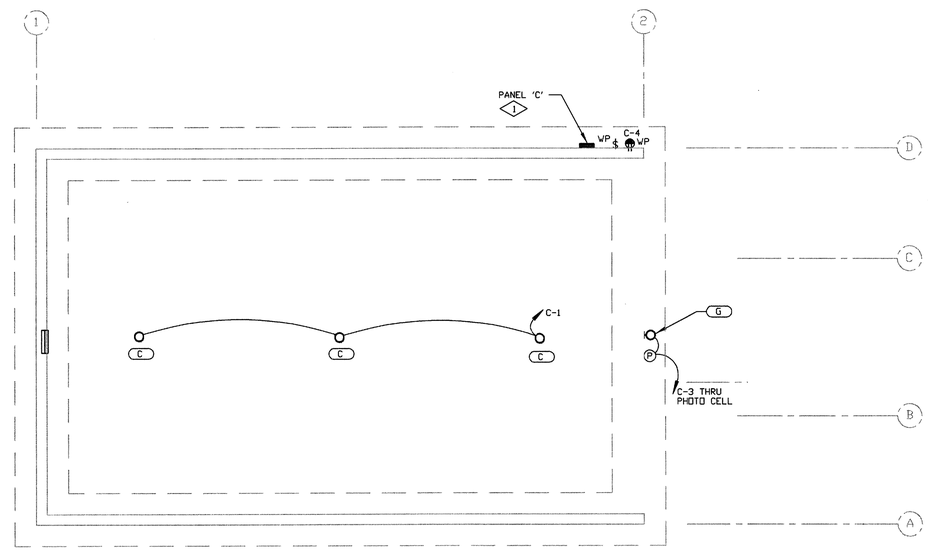

ELECTRICAL PLAN

SCALE: 1/8"=1'-0" SALT STORAGE BUILDING

Utah Department of Transportation
Maintenance Facility

ISSUE

SALT STORAGE BUILDING & SNOW/ICE MELTING

E-303

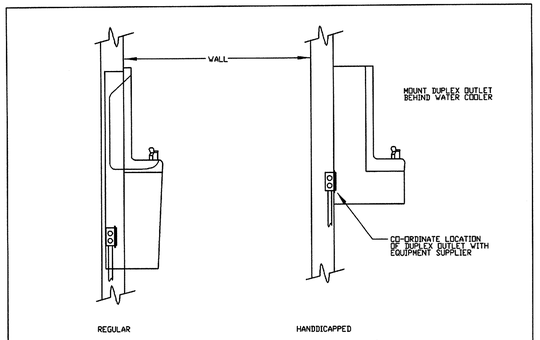

DETAIL 01/E401 ELECTRIC WATER COOLER (EWC)

P0011-FK

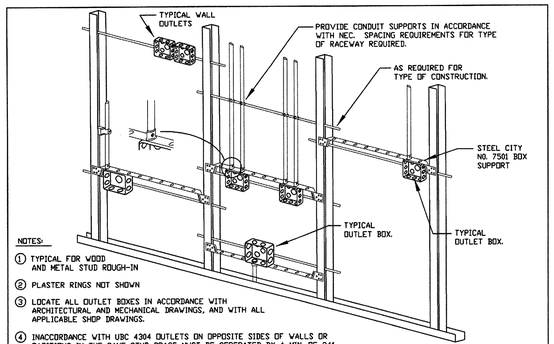

DETAIL 02/E401 TYPICAL ROUGH-IN REQUIREMENTS

G002-FK

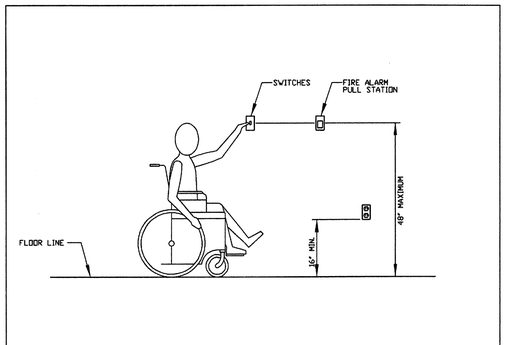

DETAIL 03/E401 MOUNTING HEIGHTS

P0015-FK

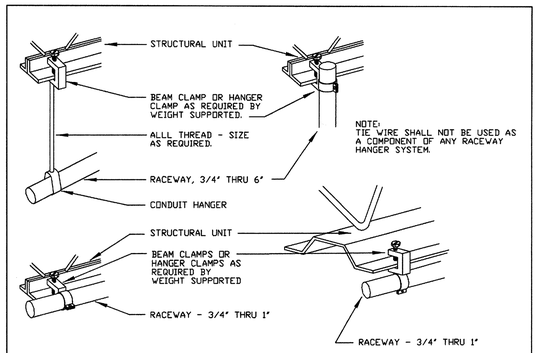

DETAIL 04/E401 TYPICAL RACEWAY SUPPORT METHODS

G005-FK

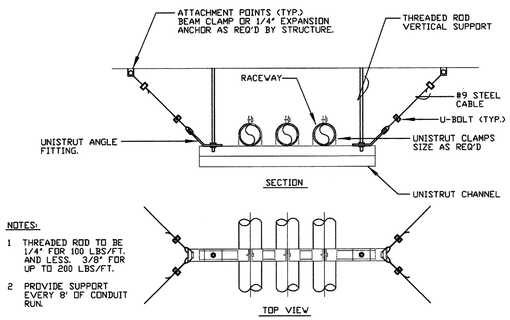

DETAIL 05/E401 MULTIPLE RACEWAY SUPPORT

G006-FK

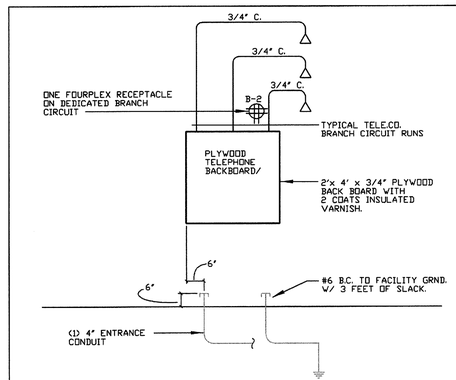

DETAIL 06/E401 TELEPHONE RISER DIAGRAM

C001-FK

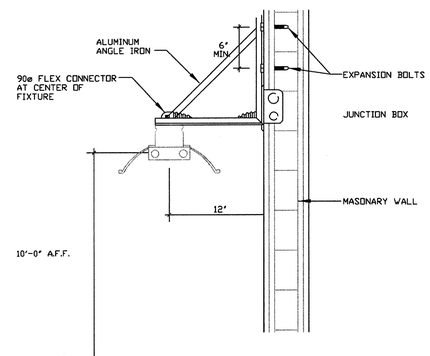

DETAIL 07/E401 FIXTURE MOUNTING

M022-BB

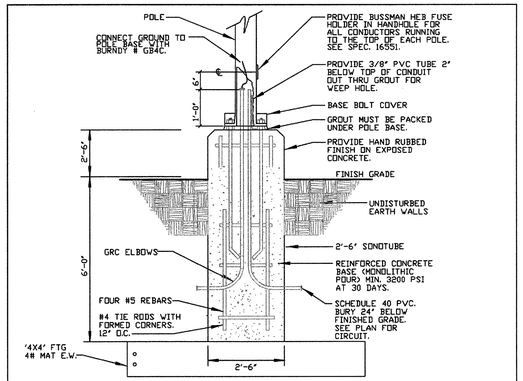

DETAIL 08/E401 LIGHTING POLE

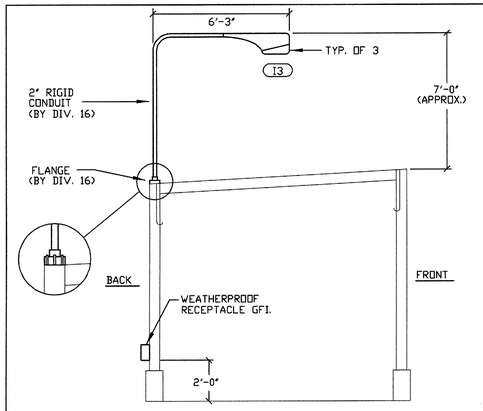

DETAIL 09/E401 SANDER RACK LIGHT POLE

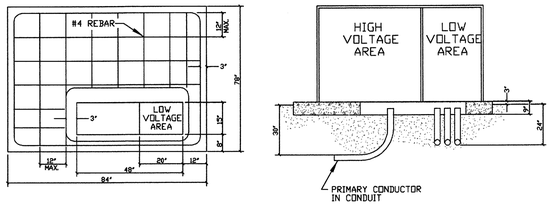

DETAIL 10/E401 PAD MOUNTED TRANSFORMER

P0035-CD

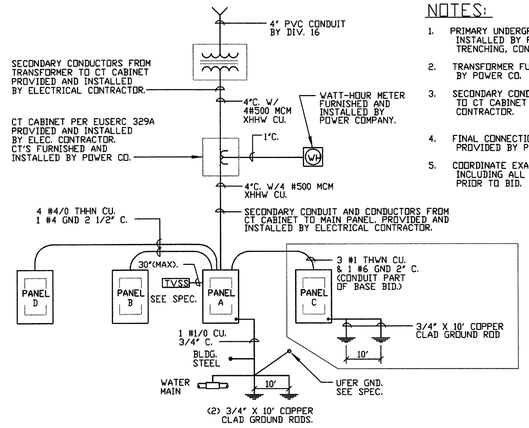

NOTES:

1. PRIMARY UNDERGROUND SERVICE FURNISHED AND INSTALLED BY POWER CO. TRANSFORMER PAD, TRENCHING, CONDUIT AND BACKFILL BY DIV. 16.
2. TRANSFORMER FURNISHED AND INSTALLED BY POWER CO.
3. SECONDARY CONDUIT AND CONDUCTORS FROM TRANSFORMER TO CT CABINET PROVIDED AND INSTALLED BY ELECTRICAL CONTRACTOR.
4. FINAL CONNECTION TO TRANSFORMER, CT'S AND METER PROVIDED BY POWER CO.
5. COORDINATE EXACT SERVICE ENTRANCE REQUIREMENTS INCLUDING ALL LINE EXTENSION COSTS WITH POWER CO. PRIOR TO BID. INCLUDE ALL COSTS IN BID.

ONE LINE DIAGRAM

NO SCALE

Utah Department of Transportation
Maintenance Facility

ISSUE

DETAILS & ONE-LINE DIAGRAM

E-401