I - 215

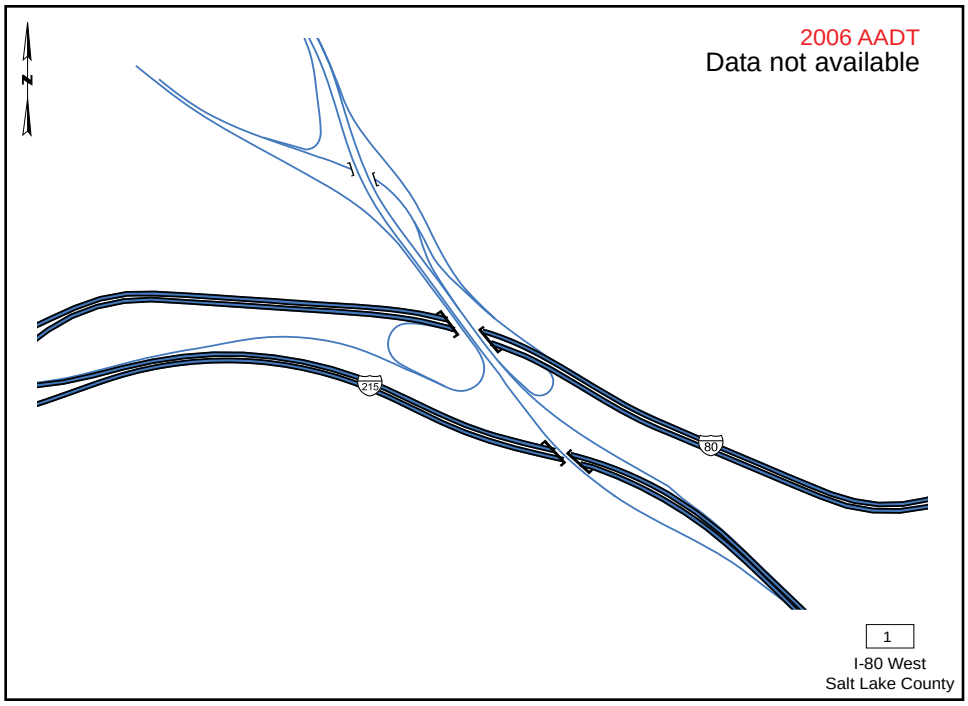
2006 AADT
Data not available
N
215
80
1
I-80 West
Salt Lake County

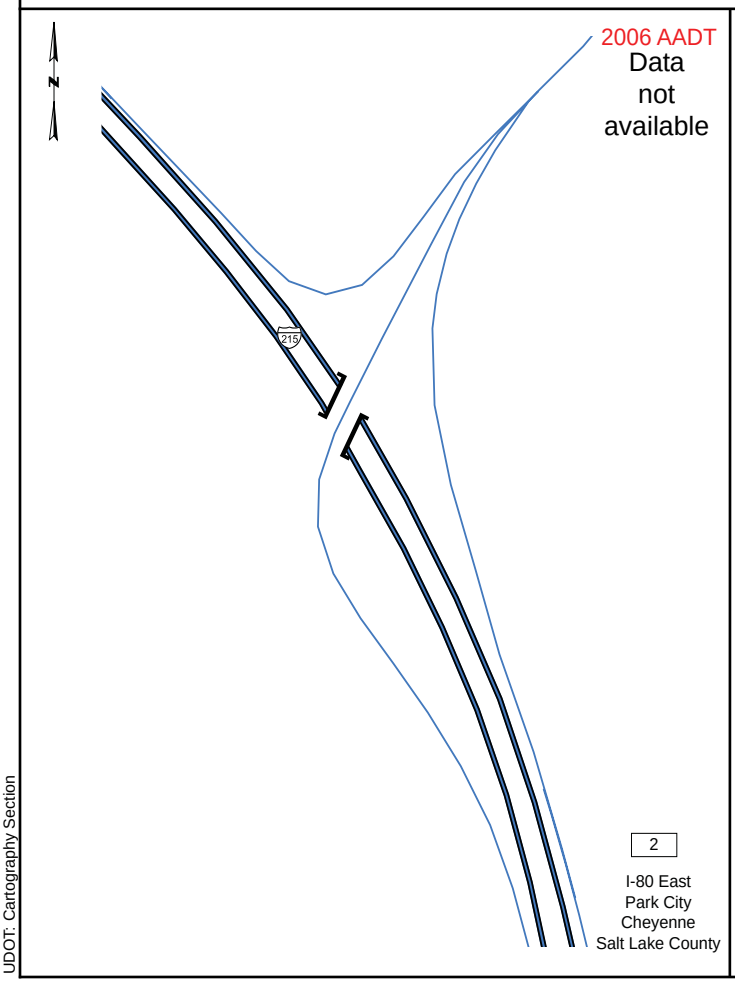
2006 AADT
Data not available
N
215
2
I-80 East
Park City
Cheyenne
Salt Lake County

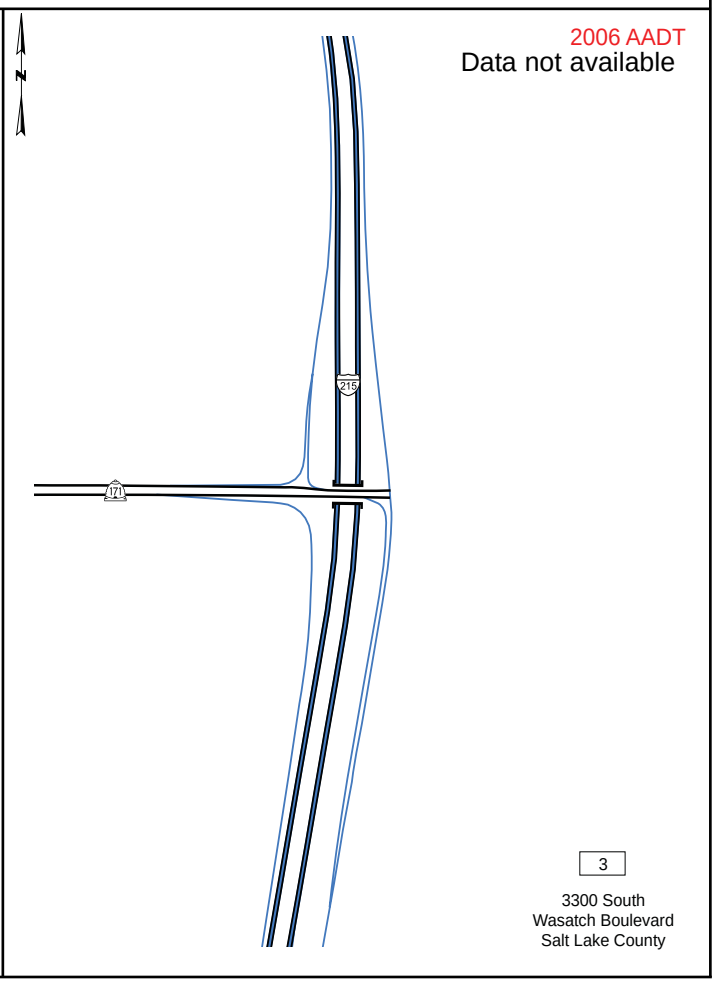
2006 AADT
Data not available
N
215
171
3
3300 South
Wasatch Boulevard
Salt Lake County

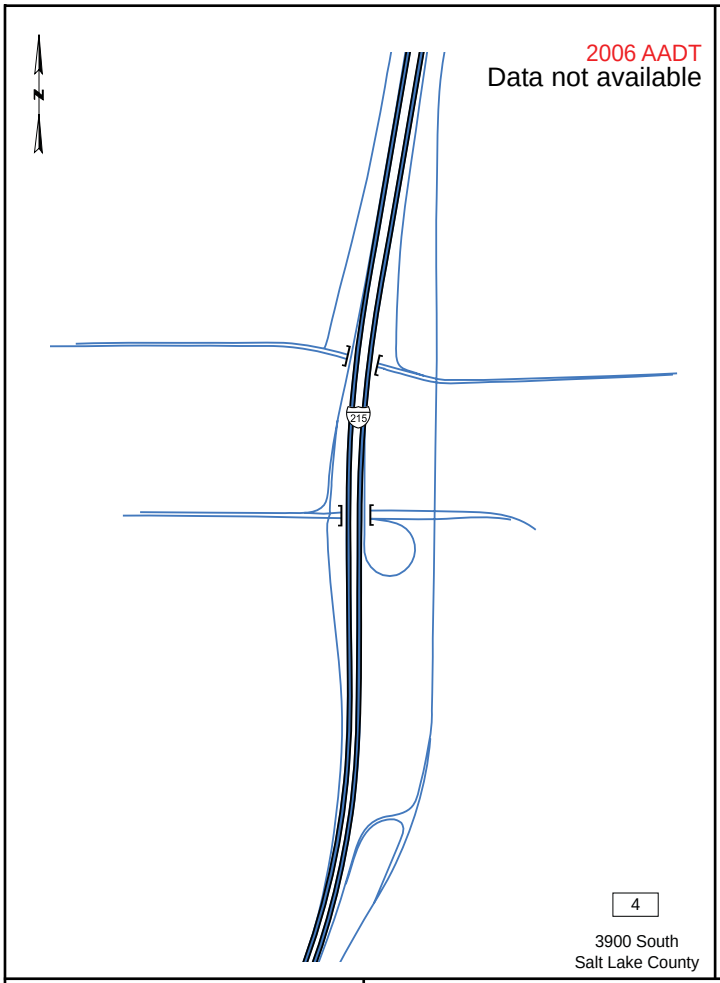
2006 AADT
Data not available
N
215
4
3900 South
Salt Lake County

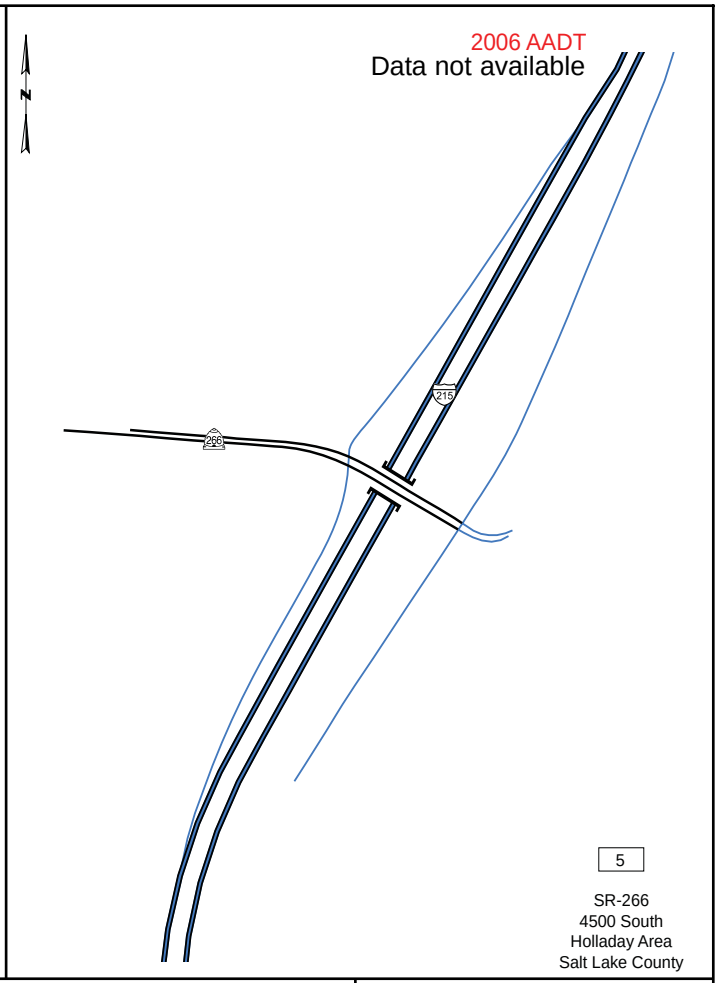
2006 AADT
Data not available
N
215
266
5
SR-266
4500 South
Holladay Area
Salt Lake County

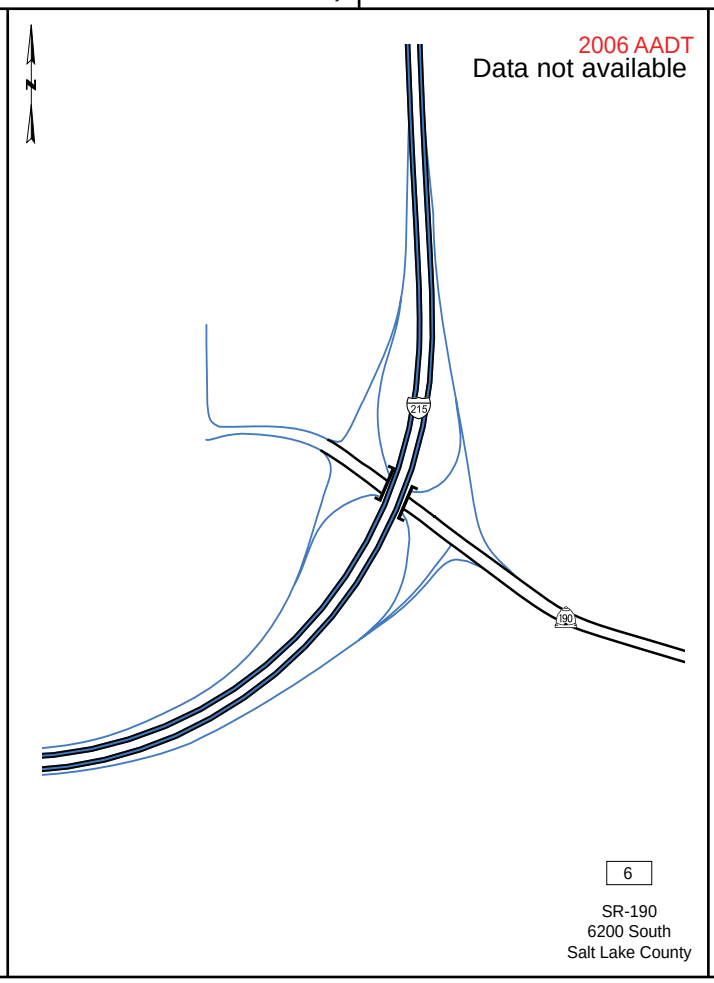
2006 AADT
Data not available
N
215
190
6
SR-190
6200 South
Salt Lake County

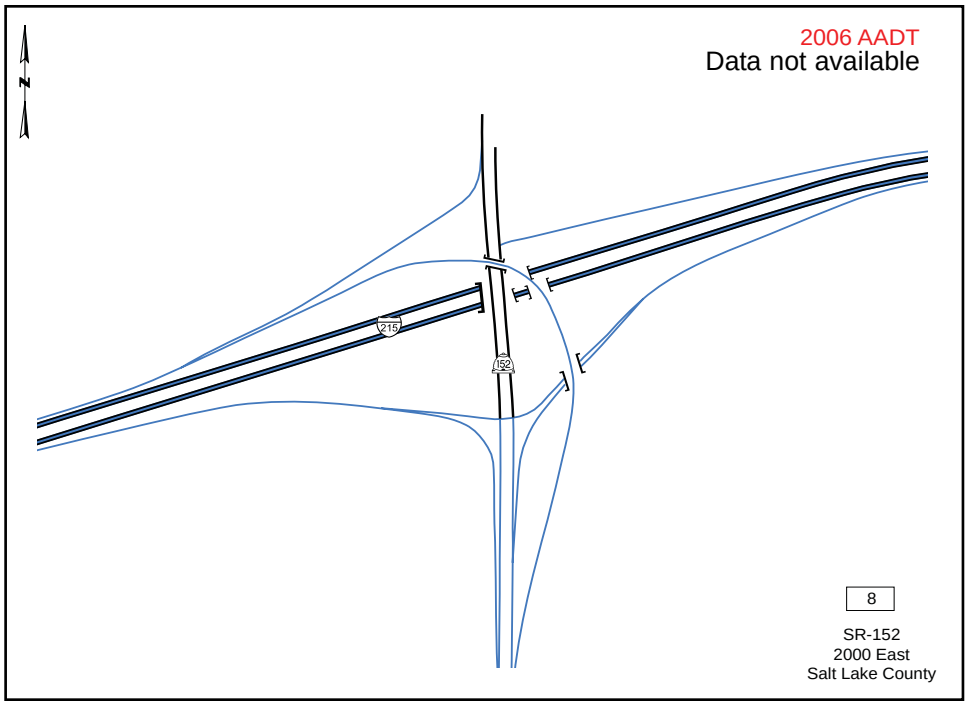
2006 AADT
Data not available
N
215
152
8
SR-152
2000 East
Salt Lake County

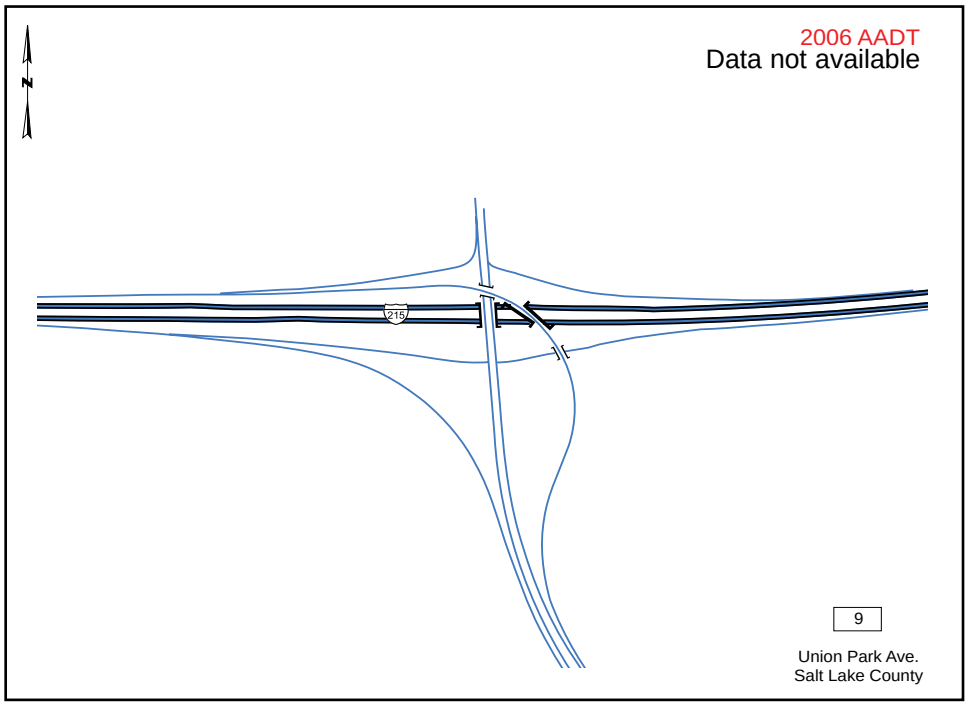
2006 AADT
Data not available
N
215
9
Union Park Ave.
Salt Lake County

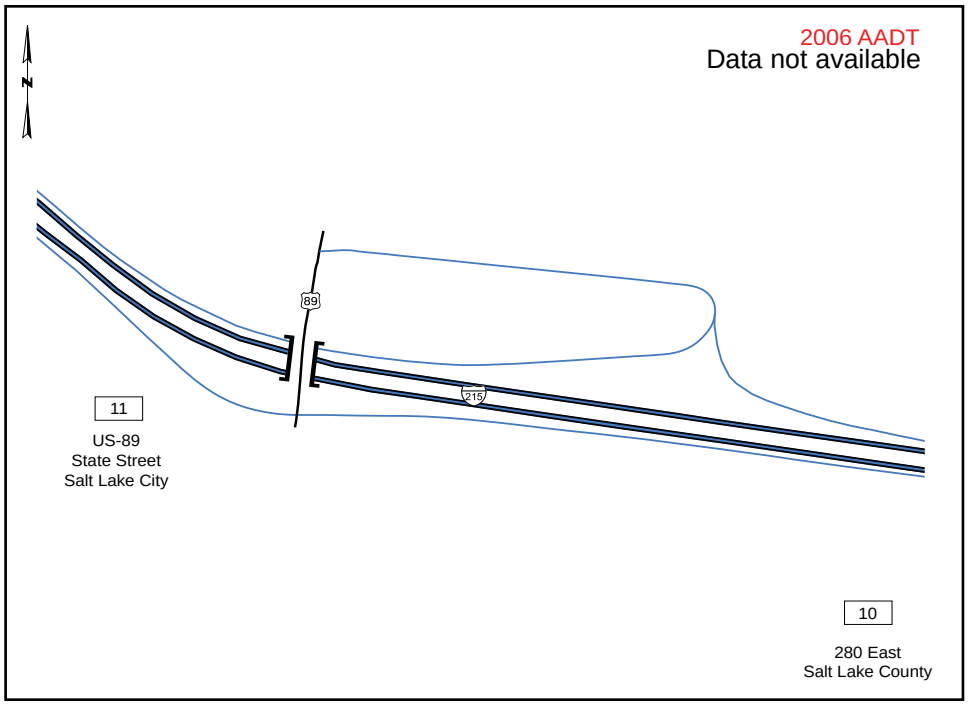
2006 AADT
Data not available
N
89
215
11
US-89
State Street
Salt Lake City
10
280 East
Salt Lake County

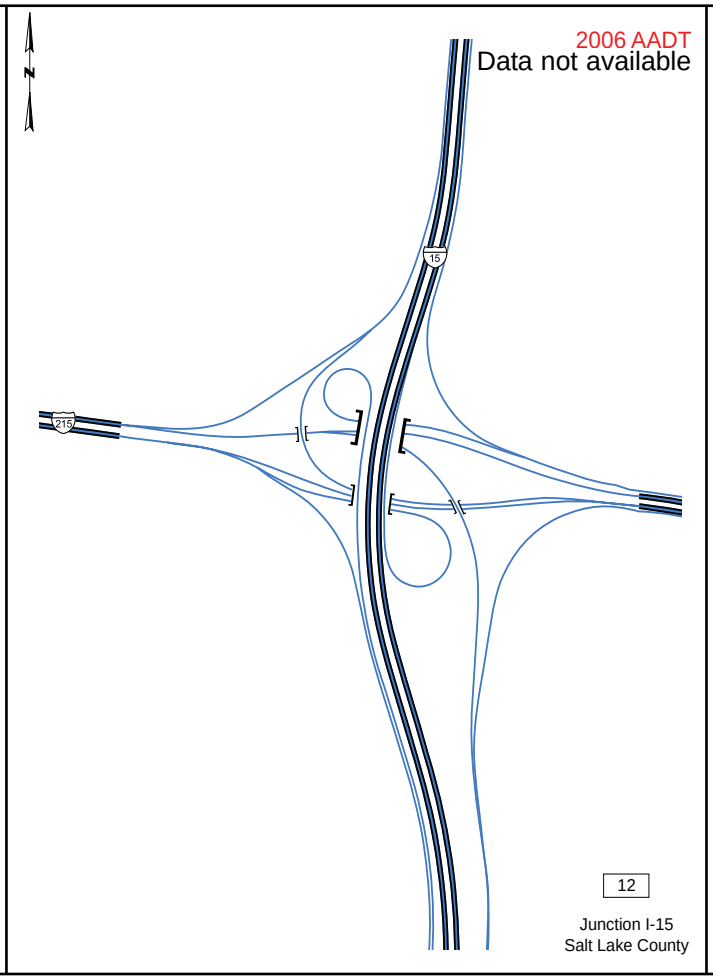
2006 AADT
Data not available
N
15
215
12
Junction I-15
Salt Lake County

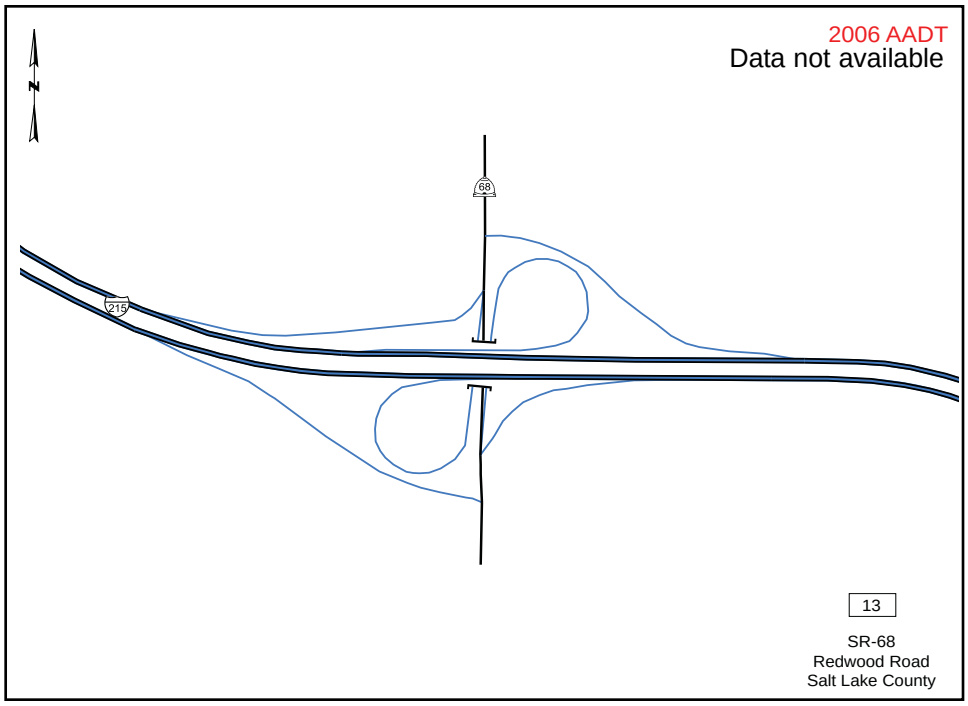
2006 AADT
Data not available
N
68
215
13
SR-68
Redwood Road
Salt Lake County

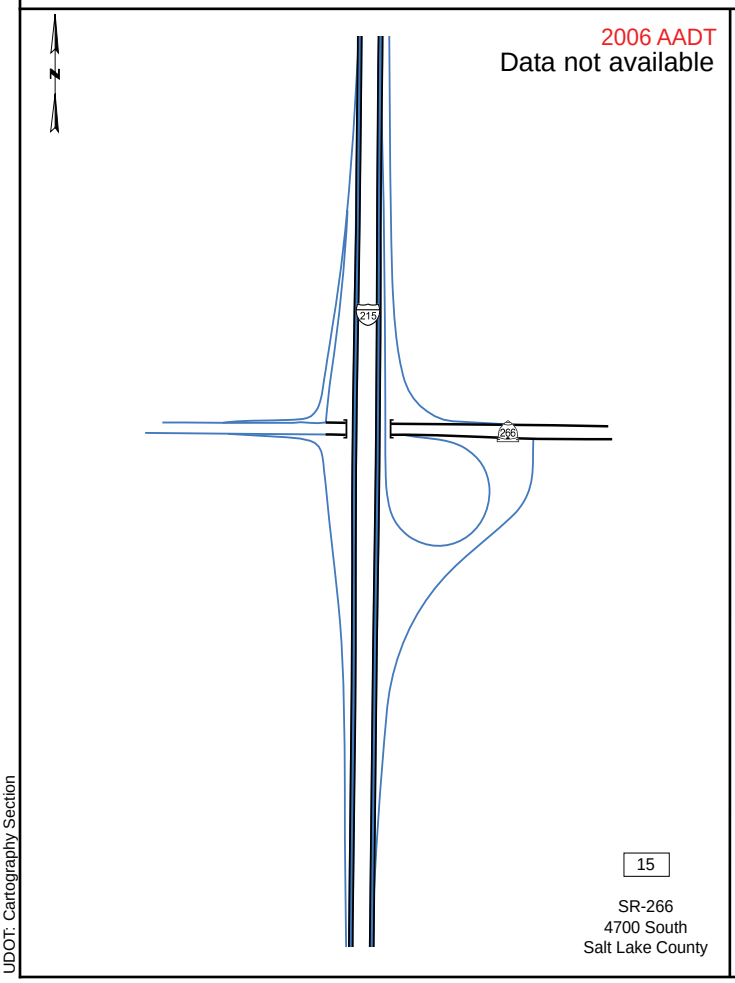
2006 AADT
Data not available
N
215
266
15
SR-266
4700 South
Salt Lake County

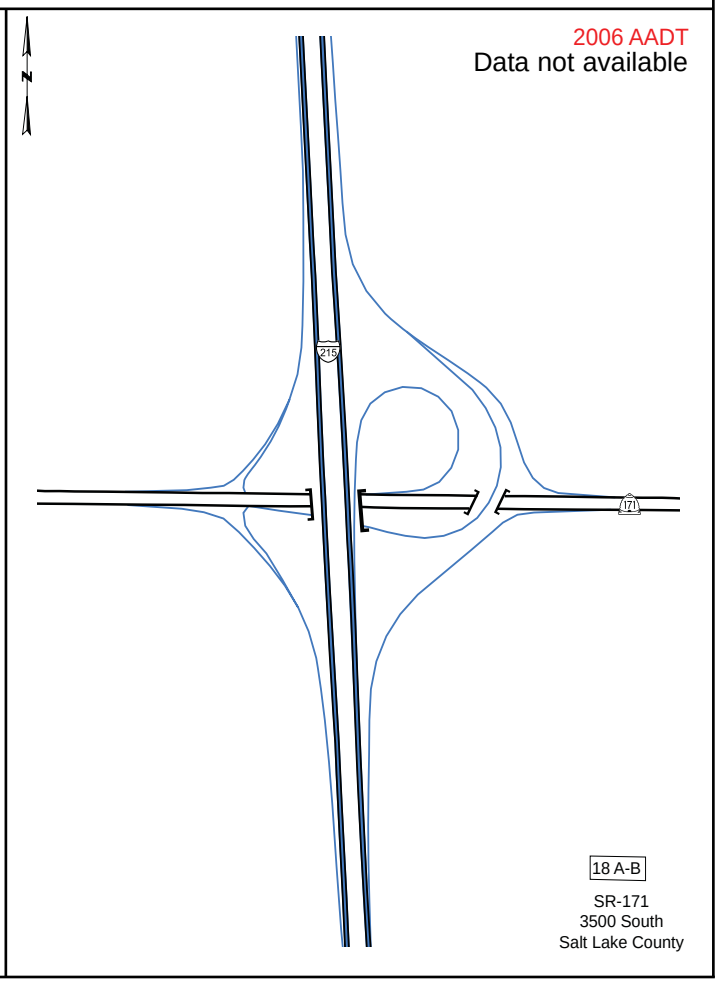
2006 AADT
Data not available
N
215
171
18 A-B
SR-171
3500 South
Salt Lake County

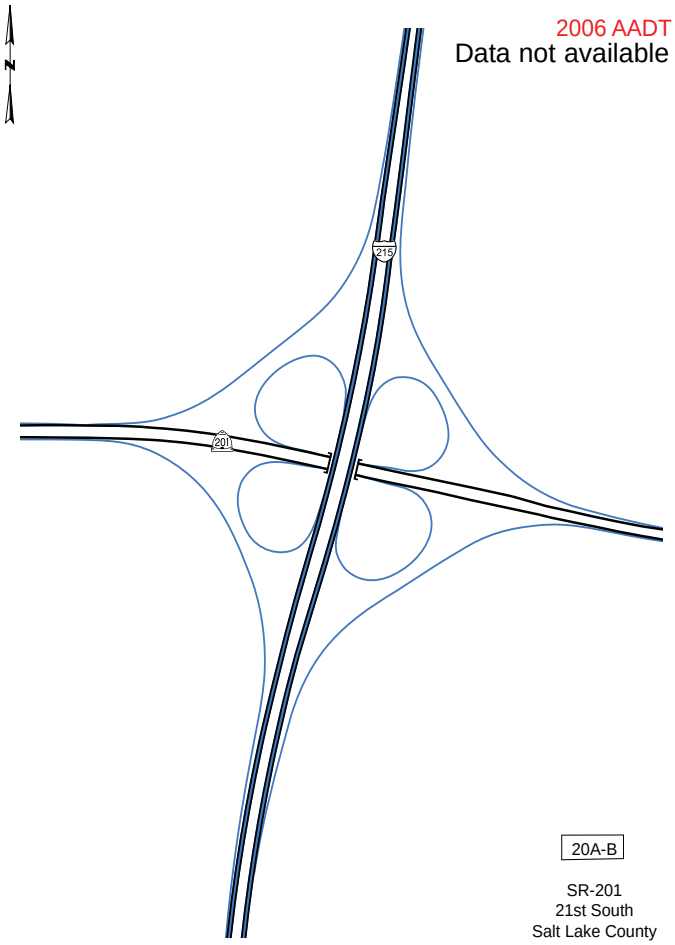
2006 AADT
Data not available
N
215
201
20A-B
SR-201
21st South
Salt Lake County

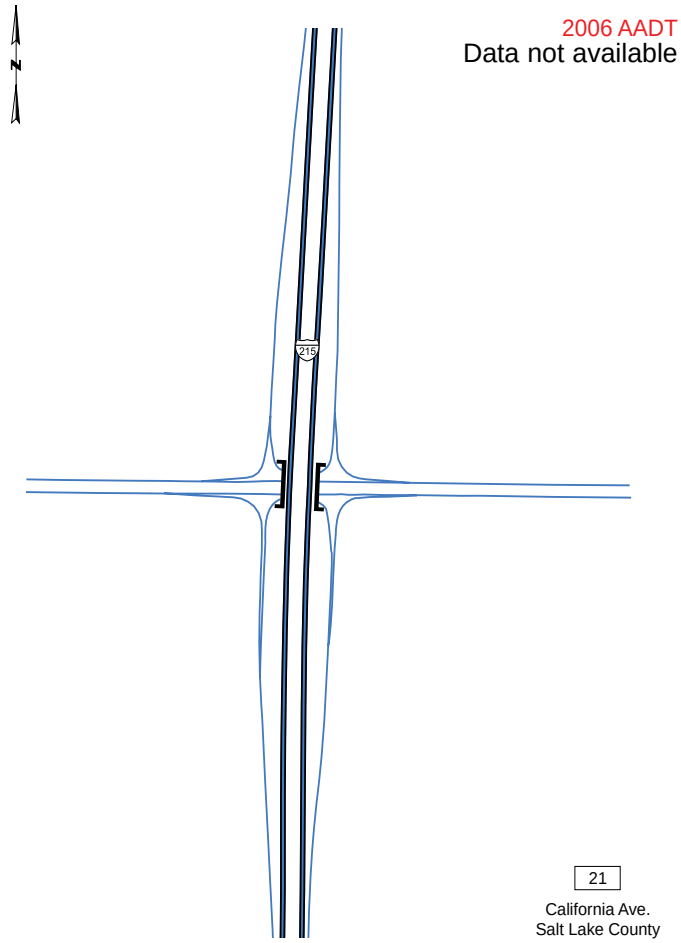
2006 AADT
Data not available
N
215
21
California Ave.
Salt Lake County

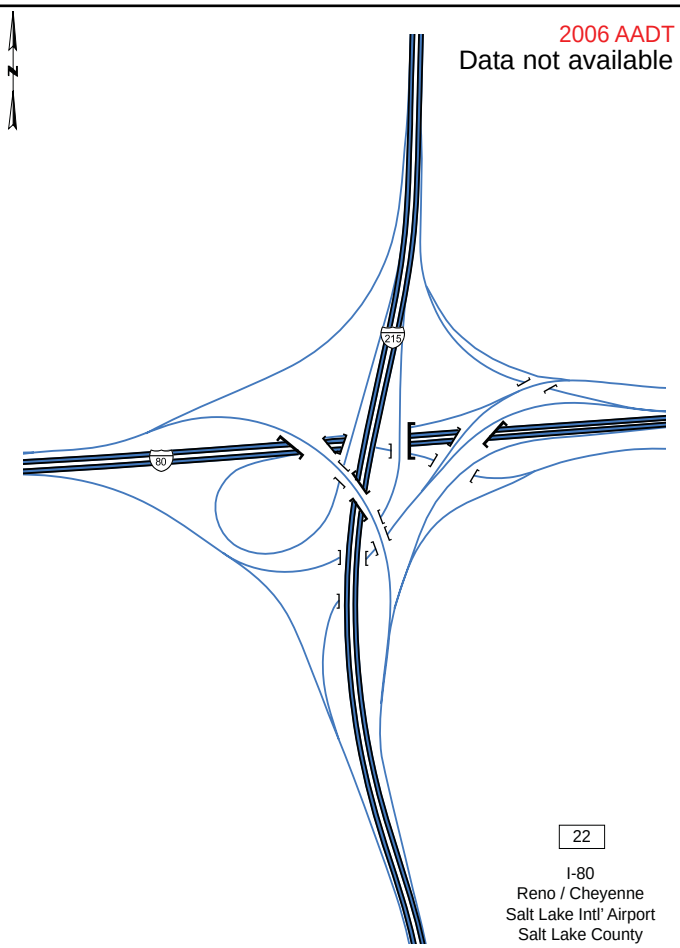
2006 AADT
Data not available
N
215
80
22
I-80
Reno / Cheyenne
Salt Lake Intl' Airport
Salt Lake County

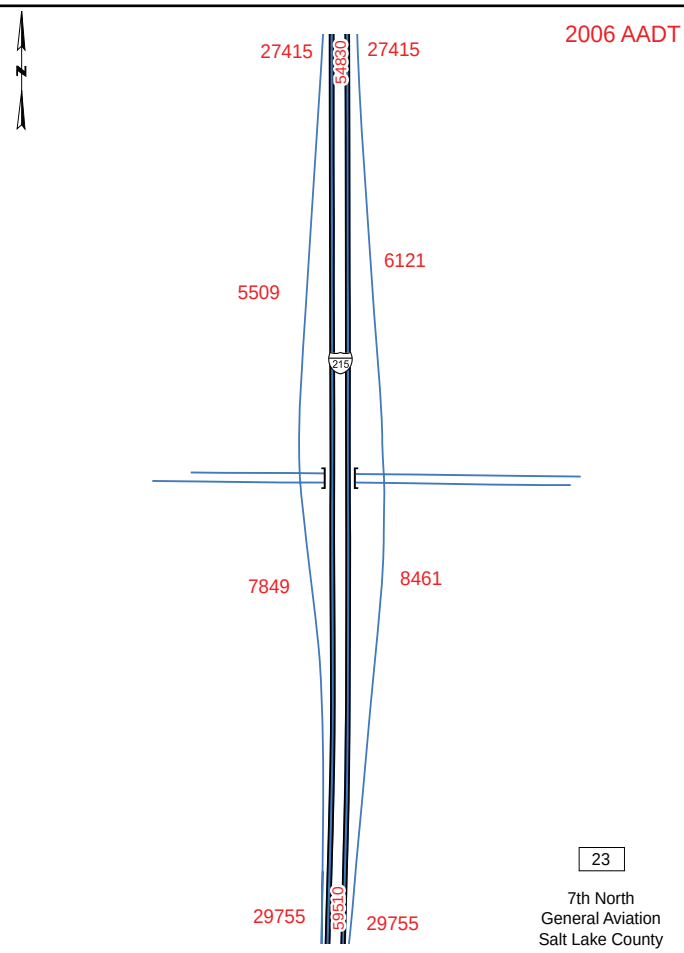
2006 AADT
N
27415
54830
27415
6121
5509
215
7849
8461
29755
59510
29755
23
7th North
General Aviation
Salt Lake County

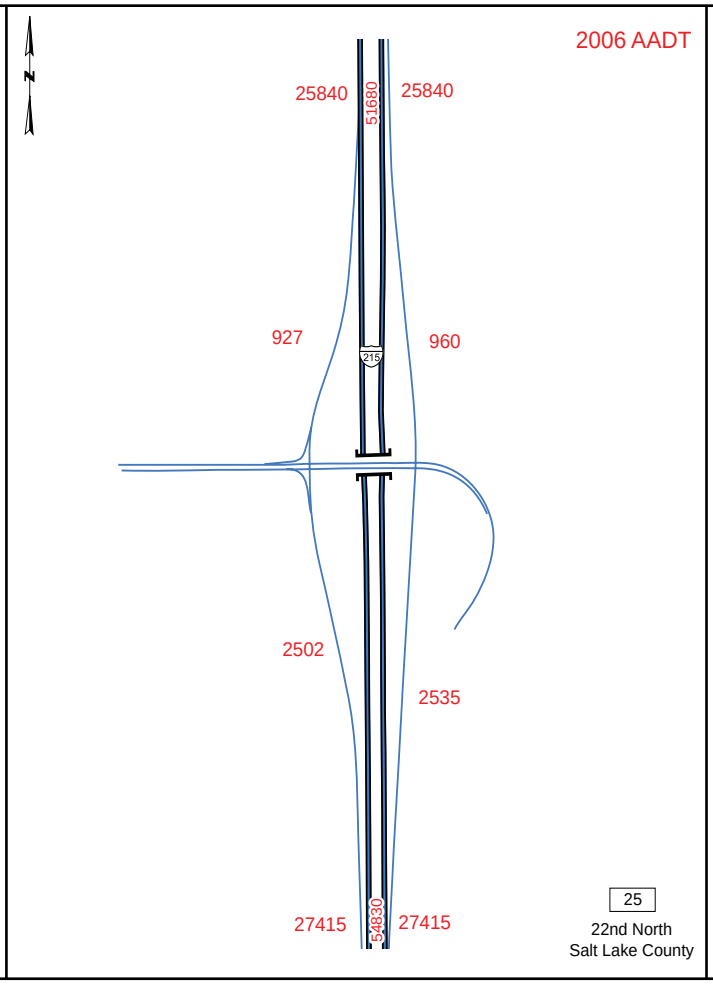

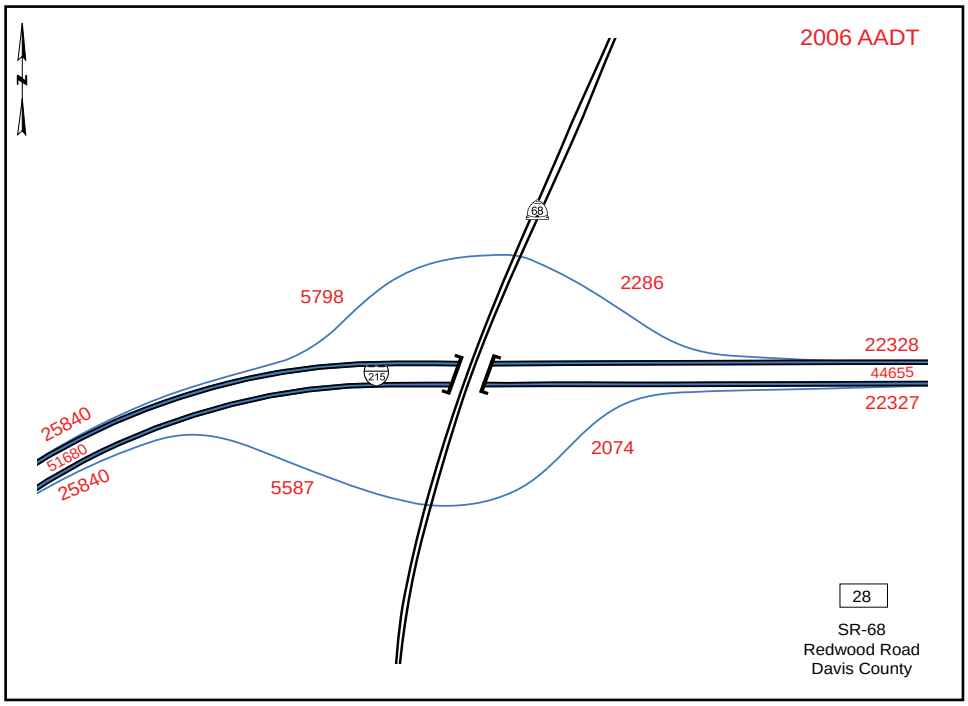

UDOT: Cartography Section

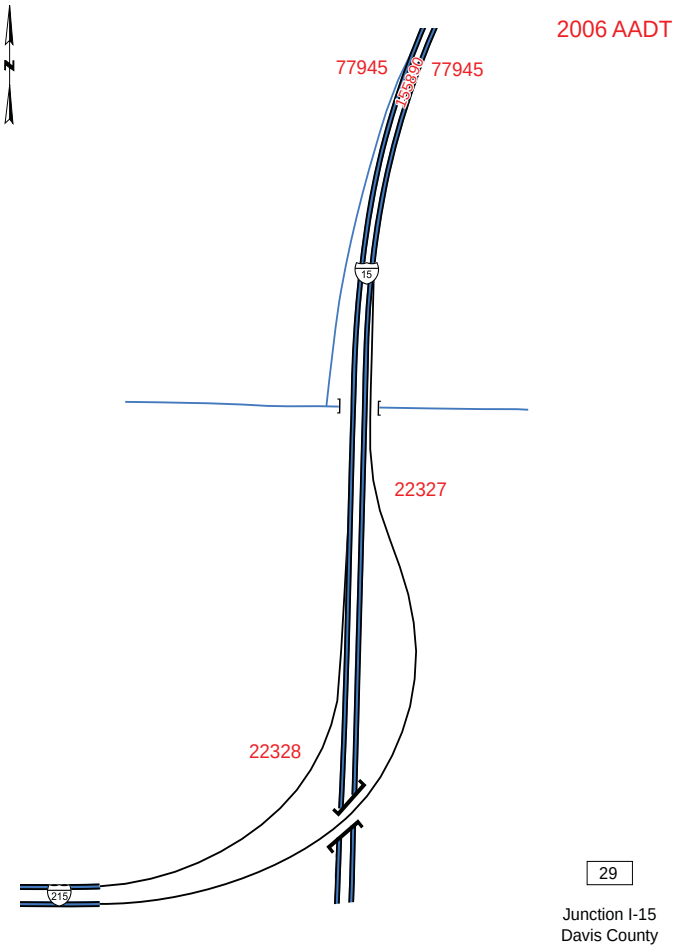

UDOT: Cartography Section