August 15, 2007

MEMORANDUM **UTAH DEPARTMENT OF TRANSPORTATION**

TO: Jim McMinimee, P.E., Chairman

FROM: Barry Axelrod
Recorder, Standards Committee

Digitally signed by Barry Axelrod
DN: email=baxelrod@utah.gov, c=US, st=UT, l=Salt Lake City, ou=http://www.usertrust.com/cps, cn=Barry Axelrod
Reason: I attest to the accuracy and integrity of this document
Date: 2007.08.15 14:01:09 -06'00'

SUBJECT: Standards Committee Meeting Minutes and Next Meeting

The next meeting has been scheduled for Thursday, August 30, 2007 at 8:00 a.m., in the main 1st floor conference room of the Rampton Complex.

Item		**Remarks**	**Sponsor**
1.	Minutes of June 28, 2007	For approval	Barry Axelrod
2.	Supplemental Specification and Supplemental Drawings, FG Series. See Listing.	For approval (doc pg 26)	Paul West
3.	Standard Specifications and Standard Drawings, ATMS area. See listing.	For approval (doc pg 54)	Mike Adams Todd MacGillvray
4.	Standard Specifications, Overhead Sign and ATMS related. See listing.	For approval (doc pg 160)	Jason Richins
5.	Standard Specifications, Structures Related, part one. See listing.	For approval (doc pg 181)	Jason Richins
6.	Standard Specifications including deletions, Structures Related, part two. See listing.	For approval (doc pg 209)	Jason Richins
7.	Standard Specification 01355, Environmental Protection	For approval (doc pg 238)	Jerry Chaney
8.	Standard Specifications, Structural Painting Related. See listing.	For approval (doc pg 251)	Bob Nash
9.	Standard Specifications, Structural Joint Related. See listing.	For approval (doc pg 279)	Bob Nash
10.	Standard Specifications, Culvert Related. See Listing.	For approval (doc pg 297)	Ray Cook
11.	Standard Specification and Standard Drawings, Retaining/Noise Wall Related. See Listing.	For approval (doc pg 334)	Ray Cook
12.	Standard Drawings, Assorted Traffic and Safety Related Drawings. See Listing.	For approval (doc pg 367)	Wes Starkenberg
13.	Standard Drawings, Assorted Traffic and Safety Related Drawings. See Listing.	For approval (doc pg 384)	John Leonard
14.	Sub-Committee Update on other Standards Approvals	For approval (doc pg 411)	Robert Miles
15.	Review of Assignment/Action Log	For review	Jim McMinimee
16.	Meeting Improvements (on-going agenda item)	For discussion	Jim McMinimee
17.	Other Business	For discussion	Jim McMinimee

JCM/ba
Attachments

cc:

Cory Pope Director, Region One	Stan Burns Engineering Services	Robert Miles Standards
Randy Park Director, Region Two	Boyd Wheeler Bridge Design	Barry Axelrod Standards
David Nazare Director, Region Three	Shana Lindsey Construction	Patti Charles Standards
Dal Hawks Director, Region Four	Tim Biel Materials	Shana Lindsey Research
	Richard Clarke Maintenance	Tracy Conti Operations
	Robert Hull Traffic and Safety	Anthony Sarhan FHWA
	Michael Adams Traffic Management Division	Mont Wilson AGC
	Rex Harris Region 1, Preconstruction	Tyler Yorgason ACEC

Agenda Listing

Item 2:

02822	Right of Way Fence and Gate
FG 1A	Right Of Way Fence And Gates (Wood Post)
FG 1B	Right Of Way Fence And Gates (Wood Post)
FG 2A	Right Of Way Fence And Gates (Metal Post)
FG 2B	Right Of Way Fence And Gates (Metal Post)

Item 3: **(For 2008)**

13551	General ATMS Requirements
13552	Ramp Meter Signals and Signing
13555	ATMS Cabinet
13556	Closed Circuit TV Assembly
13558	Highway Advisory Radio (HAR) System (new section)
13559	Non-Intrusive Detector System (new section)
13594	Fiber Optic Communication
AT 1	Legend Sheet
AT 2	Ramp Meter Details
AT 3A	Ramp Meter Sign Panel
AT 3B	Ramp Meter Sign Panel
AT 4	Typical Ramp Meter Signal Head Mounting
AT 5	Ramp Meter Loop Installation
AT 6	Conduit Details
AT 7	Polymer-Concrete Junction Box Details
AT 8	ATMS Cabinet
AT 9	ATMS Cabinet Disconnect And Transformer Frame
AT 10	Deleted (Replaced by AT 10A and AT 10B)
AT 10A	CCTV Mounting Details (new drawing)
AT 10B	CCTV Settings (new drawing)
AT 11	CCTV Pole and NID Mounting Details (new title)
AT 12	CCTV Pole Foundation For CCTV Poles (new title)
AT 13	HAR Pole Detail (new drawing)

Item 4: **(For 2008)**

02893	Overhead Sign Structure (new section)
13557	Variable Message Sign

Item 5: **(For 2008)**

03372	Thin Bonded Polymer Overlay
05835	Modular Expansion Joint (new section)
07105	Water Proofing Membrane

Item 6:	**(For 2008)**
03924	Structural Concrete Repair (new section) (Deletes 03921, 03922, 03923 & 03935)
03933	Parapet/Parapet End Modification
03934	Structural Pothole Patching
07921	Sealing Existing Concrete Slope Protection Joints

Item 8:	**(For 2008)**
09972	Painting for Structural Steel
09991	Cleaning and Repainting Structural Steel
09992	Cleaning and Overcoating Structural Steel

Item 9:	**(For 2008)**
05822	Bearing
05831	Expansion Joint Modification
05832	Expansion Joint

Item 10	**(For 2008)**
02645	Precast Concrete Box and Three-Sided Culvert Structures
02646	Concrete Box Culvert (new section)
03412	Prestressed Concrete

Item 11:	**(For 2008)**
02861	Precast Retaining/Noise Walls
SW 2	Noise Wall Placement Options
SW 3A	Precast Concrete Noise Wall 1 Of 2
SW 3B	Precast Concrete Noise Wall 2 Of 2
SW 4A	Precast Concrete Retaining/Noise Wall 1 Of 3
SW 4B	Precast Concrete Retaining/Noise Wall 2 Of 3
SW 4C	Precast Concrete Retaining/Noise Wall 3 Of 3 (new drawing)
SW 5	Precast Pilaster Post (new drawing)
SW 6	Precast Concrete Panel Surface Texture Options (new drawing)

Item 12:	**(For 2008)**
SN 1	Bridge Load Limits Signs (delete)
SN 2	School Speed Limit Assembly
SN 3	Overhead School Speed Limit Assembly
ST 3	Delete (Replaced by ST 3A, 3B,3C, and 3D)
ST 3A	Typical Pavement Markings (new drawing)
ST 3B	Typical Pavement Markings (new drawing)
ST 3C	Typical Pavement Markings (new drawing)
ST 3D	Typical Pavement Markings (new drawing)

Item 13:	**(For 2008)**
GW 1	Delete (Replaced by GW 1A and 1B)
GW 1A	Raised Island (new drawing)
GW 1B	Raised Island and Plowable End Section (new drawing)
SN 7A	Placement of Ground Mounted Signs
SN 7B	Placement of Ground Mounted and Barrier Mounted Signs

April 26, 2007

A regular meeting of the Standards Committee convened at 8:00 am, Thursday, April 26, 2007, in the 1st floor conference room of the Rampton Complex.

Members Present:

Jim McMinimee	Project Development	Chairman
Robert Miles	Standards and Specifications	Secretary
Barry Axelrod	Standards and Specifications	Recorder
Richard Miller	Engineering Services (for Stan Burns)	Member
Darrell Giannonatti	Construction	Member
Richard Clarke	Maintenance	Member
John Leonard	Traffic and Safety (for Robert Hull)	Member
Tim Biel	Materials	Member
Boyd Wheeler	Bridge Design	Member
Greg Punski	FHWA (for Anthony Sarhan)	Advisory Member
Mont Wilson	AGC	Advisory Member
Tyler Yorgason	ACEC	Advisory Member

Members Absent:

Stan Burns	Engineering Services	Member
Robert Hull	Traffic and Safety	Member
Randy Park	Region 2	Member
Rex Harris	Region 1, Preconstruction	Member
Michael Adams	TOC	Member
Anthony Sarhan	FHWA	Advisory Member

Staff:

Patti Charles	Standards and Specifications
Degen Lewis	Materials
Shana Lindsey	Research
Bob Nash	Bridge Design
Matt Rink	Bridge Design
John Butterfield	Region 2, Materials

Visitors:

Roland Stanger	FHWA

Standards Committee Meeting

Minutes of the June 28, 2007 meeting:

1. Minutes of April 26, 2007 meeting were approved as written.

   Initially this item was deferred for a lack of a quorum. During the discussion of Agenda Item 2 the required number of voting members was present. Upon completion of Item 2 the minutes were reviewed. There was no discussion.

   Motion: Richard Clarke made a motion to accept the minutes as written. Seconded by Boyd Wheeler. Passed unanimously.

2. Supplemental Specification 03211, Reinforcing Steel and Welded Wire (Agenda Item 2) - Presented by Bob Nash.

   Bob said the biggest change dealt with the handling requirements to bring the section more in line with AASHTO bridge specifications. He said information for motion resistant reinforcing steel was also included as part of the change. He said the Minimum Sampling and Testing Requirements were also updated. Bob said those were the major changes.

   Discussion points were:

   - Jim commented that the changes were not very graphic in the accompanying file. Bob said they were not and that a specification was being used for the handling of the reinforcing steel. He indicated it was a supplemental but not a Department one. Being incorrect wording, what he meant to say was it was a Special Provision. Bob said that was incorporated.

   - Richard Miller said he was confused on the wording in article 1.5, paragraph D1. He asked if it could be re-worded and what was actually being covered. Bob went on to explain the requirement. Discussion followed on the meaning related to the current wording. Boyd commented that because you have to read through the third line of the paragraph to find out what the covering is he suggested re-wording it. Richard gave a partial suggestion for wording.

   - Jim commented about the 30 day requirement and what it had to do with it. He asked if there were a threshold where you could have the epoxy in the sunlight up to 30 days but after that is was no longer good. He then asked if this was a projection on what to do if you anticipated reaching the 30 days. Richard asked if this is covered in AASHTO M 284. Boyd said no and that it dealt with just putting the epoxy coating on the bar.

- Boyd said they would re-word the paragraph. Based on a comment Barry said the item did not have to come back for approval and that it could be approved now. He said he would look for the change in the copy submitted after the meeting.

- There was no further discussion.

Motion: Richard Miller made a motion to approve Supplemental Specification 03211as discussed and modified. Seconded by John Leonard.

Jim commented that there was now a quorum. Being no further discussion he called the question. Passed unanimously.

3. Supplemental Specification 05120, Structural Steel (Agenda Item 3) – Presented by Bob Nash.

Bob said the current Supplemental Specification was incorporated in this update. He said other requirements were rearranged or moved to other sections.

Discussion points were:

- Richard Miller commented about comments on the submittal sheet from Tyler Yorgason and Karl Verhaeren with respect to article 1.4, paragraph C5 and the 14 calendar day requirement. Richard asked Bob Nash why he disagreed with the comments. Bob said he thought the current wording covered the requirement, adding that each time you submit the item you have 14 calendar days. Richard then asked about enforcement based on the phrase “may be increased” in the proposed paragraph. Comment indicated it dealt with contract time.

- Boyd suggested changing the wording. Richard again asked about the reason for rejecting the proposed change made by Tyler and Karl. Bob said because in his opinion he thought the current wording covered the comments.

- Darrell asked if there is an issue and it has to come back will it effect contract time and costs. Mont suggested “if it takes more than 14 day then contract time will be...” Robert Miles commented to Mont about not being on the critical path and therefore not effecting contract time.

- Mont then asked if the 14 calendar day requirement was excessive, suggesting five working days. He asked if that was unrealistic. Boyd said it could be until we get to the point where the drawings are submitted electronically with instantaneous delivery. Boyd said currently it could be five days before they even see the drawing. Bob Nash said on occasion it is 12 days before they see shop drawings and then have to quickly turn them around.

- Mont asked about submitting the drawings directly to Structures. Bob Nash said the Resident Engineer (RE) has responsibility for the project and that they (Structures) are only advising him. Mont asked about how burdensome it would be if submitted simultaneously in hard copy. Boyd said it would probably work. Mont asked about five days or seven calendar days. Boyd said yes. Mont said if five days or seven calendar days is accepted then the "may or will be" goes away.

- Boyd commented about a claim being more likely or not. Darrell said we have to hold ourselves accountable for time frames. Boyd commented about past experience.

- Based on the discussion Richard Miller suggested using the wording recommended by Tyler and Karl to replace 5a and b. There did not seem to be any disagreement. Discussion still continued. There was a comment about when the time starts, from receipt or when sent.

- John Leonard asked about electronic submissions, suggesting that a statement could be added that covered that option versus regular mail.

- Richard Miller than asked about Bob Westover's comment on the submittal sheet with respect to 1.4 D8 and no action being taken. Bob Nash commented as before that he thought that was the way it read now. Bob said we are asking for a submittal from the contractor so why would we be generating something that we are approving. He said they could change the wording. Barry commented that specifications are written to the contractor. Richard said it made sense.

- There was no further discussion.

Motion: John Leonard made a motion to approve Supplemental Specification 05120 as discussed with respect to article 1.4 C5 and modified to reflect the contractor would be allowed seven calendar days for electronic submittals or 14 days. Seconded by Richard Miller. Passed unanimously.

4. Supplemental Specification 03310, Structural Concrete (Agenda Item 4) – Presented by Matt Rink.

Matt referred to the submittal sheet listing of change details in discussing the recommended changes. He said: 1) verbiage was added throughout to allow use of high early strength concrete where called for on projects – especially where ABC is used; 2) hot and cold weather limitations were removed from Standard Specification 03055, Portland Cement Concrete and thus needed to be added to this specification; 3) cure times were reduced from 14 days to seven days because history has shown that required strengths and desired durability can be obtained in seven days thus reducing construction time; 4) Standard Specification 03932, Concrete Slope Protection Repair was deleted in its entirety and its applicable verbiage was added to this specification; and 5) verbiage was added to address the use of pre-cast concrete deck panels.

Matt said Measurement and Payment was not effected by this changed. He then went on to comment about stakeholder and coordination comments from the submittal sheet. He said no comments were received back from AGC. He then referred to the ACEC comments.

Discussion points were:

- Jim asked about Tyler's comments that were rejected and the reason. Matt said 1.3 H didn't make sense and didn't read right. He said he didn't think "standards" was in the title and thought it was just American Concrete Institute. Barry said he would check other specifications to see how it is called out and standardize the callout for 2008.

- Referring to the second rejected submittal sheet comment Matt said the reference to article 2.2 is needed for treatment when the end of rebar is cut off. Jim asked if there is a way to modify the statement to indicate what Matt just said. Matt agreed asking if he meant in the submittal sheet. Jim said, no and that he meant the specification. Jim said he thought the comment from Tyler was to remove extraneous wording but that Matt's comments indicated it was not extraneous. Jim said based on Matt's comments on the explanation it is not extraneous and that Tyler may have misunderstood the issue.

- Mont asked if there was going to be any discussion on article 1.4 B with respect to the strengths. Boyd said the information was submitted but didn't come back to them until a couple of days ago. Darrell strongly disagreed with the two day comment by Boyd. Darrell said he went though it already with Stan. Boyd said when they are doing a rapid bridge replacement they do need the strength in 24 hours, adding that he realizes it is hard to do.

- Darrell asked what his definition of rapid was. Boyd said when they need traffic back on the bridge within 36 hours. Darrell disagreed, commenting they get projects with very short time frames that this does not apply to. Darrell said the schedule they put together does not take into account cure times and that is why they want 75 percent strength if they take cylinders. Boyd said he was answering a different question (3000 psi). Boyd said they agreed to including the 75 percent wherever he had a "day" requirement to include 75 or 100 percent of f'c. Boyd went on to further explain the requirement. Boyd said the information would be in the plan set in response to a question from Darrell as to how the construction people would know the requirement.

- Discussion continued on the type of concrete. Tim pointed out that in article 2.1 D2, the Type III reference could be removed. John Butterfield commented that there is no such thing as a Type III. He went on to explain the difference between the Type 1 and what was considered a Type III. John said if a contractor wants to call it a Type III then it is a Type III.

- Matt went on to point out the remaining stakeholder comments from the submittal sheet. He said there were no impacted areas. Matt said the benefits were speed of construction over past methods due to use of ABC and reduction of cure times.

- Matt commented about the 1992 and 1994 specifications and hot weather limitations that were included at that time and two items in those specifications. He went on to explain those. He said they received comments that those should be incorporated back into the specifications. He said it was lost in the 1996 specs and went to PCC in 1999 and as of 2005 it is totally gone. He said they want to put it back in for decks and approach slabs to reduce the amount of cracking they are seeing, allowing time for the concrete to initially set.

- Jim asked John Butterfield if he had any thoughts on the subject. John said there are different schools of thought. He said he didn't know if it hurts but also didn't know if it helps, depending on the philosophy you subscribe too. He said one issue is how fast the concrete cures and how it effects constructability. He said the other is at what time does the concrete become ridge rather than plastic. He went on to explain the process. He said the debate goes on and on and that he wasn't sure he had the answer. He said they always place deck at night because it is the good thing to do. He said the volume issue is what is causing a lot of the stress fractures. John said he is working on a specification specifically for deck placement that will address these issues.

- Jim said it strikes him that it is a very important question for UDOT. He said he is a little concerned and may be the only one concerned that we haven't articulated an answer for that in the specifications. Boyd said they thought it best to get these corrections made now for the 2008 version and then follow up with a bid item and section for bridge deck concrete in the future relying on John Butterfield's expertise. Boyd said at that time this section would be modified.

- John said having that verbiage in there can't hurt and it is not a critical flaw. He said it will do more good than harm to include those kinds of restrictions or limitations. Darrell asked Mont how that would impact contractors. Mont said he didn't have the background or knowledge to answer that question. Boyd said from his perspective contractors for the most part are meeting the requirement because it was in the old book.

- Boyd went on to comment about the strength requirement with respect to AASHTO saying that the specification did not have the strength requirement. He said it was the length of time for the wet cure and that changed in this specification from seven to 10 days based on the number of pozzolans in the concrete. Boyd said he didn't know if that was a critical issue or if there were any comments on that.

- Boyd said the second change was time to keep traffic off the bridge changing from 21 to 14 days. In response to a comment Boyd said that change was made to keep the specification in line with the AASHTO Bridge Construction Specification. Boyd said there is work that is occurring while the desk is curing.

- In response to a comment from Shana, Boyd said if done simultaneously with the wet cure then seven to 10 days. He said it could be shorter, but it depends on the project and contractor.

- Darrell said we are still at the durability issue rather than going to strength. He asked why AASHTO is calling that out and what their thought process is. Boyd said there was no commentary on that point and that they have the authority to override it. Darrell commented on a particular project and time requirements saying we don't take cure time on structure decks into account. Boyd asked why not, adding that it is in the specification. Darrell said this is for in-house use not the contractor when we are doing our own time estimation.

- Darrell asked John Butterfield for his thoughts on the 14 days. John said he thought it was appropriate to go from 21 to 14 days, adding why not just strength. He said you could get something in two days. He said you design to your strength so that structure should function. John went on to comment about today's mixes. Darrell and John continued to discuss this.

- Jim asked again if anyone had a motion on this specification.

- There was no further discussion.

Motion: Richard Miller made a motion to approve Supplemental Specification 03310 as discussed and modified. Darrell asked Barry if he had all the notes from the discussion. Barry said he did but whoever submits the final version needs to make the updates. Barry added that they were not the ones to make those updates, but they would check them.

Seconded by Richard Clarke. Passed unanimously.

5. Supplemental Drawings, TC, Traffic Control Series (TC 4, Traffic Control Urban Intersections With Roadways Under 50 MPH; TC 5, Traffic Control Urban Intersections With Roadways Under 50 MPH; TC 6, Traffic Control Pedestrian Routing; TC 7, Traffic Control Road Closed, Detour; TC 8, Traffic Control Lane Closure; TC 9, Traffic Control Multilane Closure; TC 10, Traffic Control Expressway And Freeway Crossover/Turn Around; TC 11, Traffic Control Exit Ramp Gore; TC 12, Traffic Control Entrance Ramp Gore; TC 13, Traffic Control Shoulder-Haul Road; TC 14, Traffic Control Flagging Operation; TC 15, Traffic Control 2 Lane/2 Way Seal Coat With Cover Material; and TC 16, Traffic Control Pavement Marking) (Agenda Item 5) - Presented by John Leonard.

John said most of the changes are to bring the drawings into compliance with the MUTCD. He said they also cleaned up wording and detail scaling. He then went through each drawing highlighting the changes. John said some of the updates applied to all the drawings. He said the icons were standardized with squares for any type of channelizing device and circles for barrels.

In TC 4 John said Note 6 was added. He said editorial changes were also made to the drawing. He said they did not receive a lot of comments during the review. He also reviewed the comment log.

John said they are proposing the deletion of TC 5. He said this is almost a verbatim repeat of the MUTCD requirement and that they didn't see any reason to have the drawing. He said they will try for an August time frame to have a new TC 5 for business access issues in urbanized areas.

Moving on to TC 6, John said the icons were changed as described earlier, signs were revised, and proportionality revised. He said Note 3 was split into two notes because it contained two different thoughts. He said Note 6 is now ADA compliant.

John said some of the same changes done earlier apply to TC 7 for the icons, signs, and proportionality. He said chevron panels were also added on reverse curves. He said notes were combined to remove duplicate notes for the details and with general notes created and that a new note for "Pass with Care" signs was added. John said the title was modified slightly as were the arrow panel locations. Editorial changes were also made.

Discussion points were:

- Jim asked if we are eliminating candle sticks with the use of this application or was there a different application. John said the circles are barrels only. Jim said he was referring to the precast application and callout for Note 6 on TC 7. Jim commented that in some applications on rural Interstate he thought we were still using candle sticks. John said we have not used non-barrier freeway applications since the Cedar City problem. John said the requirement has not changed for many years.

- John said they looked at Wyoming and Idaho for their usage and they have had significant work zone fatalities when using the sticks. Jim said he has seen hundreds of miles of the candle sticks. John said in just the last few weeks Idaho has had six fatal work zone accidents. John said we have been more successful even for a little more money. He said we do not have the head-on fatalities.

John moved on to TC 8. John said the icons were changed as described earlier, signs were revised, and proportionality revised. He said duplicate notes were removed. John said that the maintenance area requested a change related to barrels on high-speed applications. John said the original drawing required this item in excess of 50 mph, but that was never the intent. Other types of channelizing devices are now authorized. John discussed the various options and pointed out this gives us greater flexibility possibly at a reduced cost.

Moving on to TC 9, John said this is identical to the MUTCD with no differences. He said the proposal is to delete the drawing and in the future replace it with a drawing for water barrier in a construction zone.

For TC 10, John said the icons and signs were changed. He said sign details on the left side of the drawing and a new Advance Warning Arrow Panel note were added. He said Notes 2 and 3 were combined and the note on signing road haul was clarified.

On TC 11, John said the icons were again updated along with the direction of travel to match common usage and general cleanup of the drawing. He said Note 5 was added, the taper on the exit ramp revised to match the MUTCD, and the 400 ft dimension on the exit ramp removed.

Discussion points were:

- There was a comment and clarification that Note 4 was added.

Continuing with TC 11, John said there have been some contractors taking down all guide signing and just putting in the exit number.

Discussion points were:

- Jim commented about Note 5 and the supplemental requirement. He said whatever you are suppose to have there you should have there. John agreed, adding that there should be some signs there. Jim said that was what he was concerned about. In that case what is the contractor to bid on? John said what they are trying to say is the existing guide signs should be there and that the contractor can not remove all the signs. Jim asked how the contractor would know that. He said the discretionary part of the statement is what is disconcerting. John said what they like to see is the one mile in advance exit direction. Jim suggested the drawing refer to a minimum as to what needs to be there. John suggested modified wording for Note 4.

On TC 12, John said the icons were again updated along with the direction of travel to match common usage and general cleanup of the drawing. He said Notes 3 and 4 were added to provide design speed guidance and Note 5 for not requiring channelizing devices when the right shoulder pavement width is adequate. He said the taper distance was added to match the MUTCD requirements.

On TC 13, John said the icons and the direction of travel to match common usage were changed. He said the Pass With Care sign and related Note 6 were added. He said notes were combined into General Notes. He said paint requirements on no-passing zones were clarified, project limit signing referenced, distances clarified, and Note 4 for barricading haul roads when not in use added.

Moving on to TC 14, John said the icons and the direction of travel to match common usage were changed and signs were revised to match MUTCD. He said a note on project limit signing was added. John said the one-way sign on Detail 14-3 was added as was the Pilot Car Follow Me detail on Detail 14-3. He said the flagger location on side streets was clarified and that signs were placed on Detail 14.1 for uniformity of details. John said the arrow panel location was modified and the “Be Prepared to Stop” sign was made optional.

On TC 15, John said the icons and the direction of travel to match common usage were changed and signs were revised to match MUTCD. He said Note 5 was added to make the “Pass With Care” sign not required, Note 11 was added to reference the TC 3 series, Note 12 was added for Project Limit signing, and “Pilot Car Follow Me” detail was added. John said the flagger location on side streets was clarified, the pilot car turn-around was modified, the length of the taper was modified, and the “Be Prepared to Stop” sign was made optional.

On TC 16, John said the icons and the direction of travel to match common usage were changed and a wording change from “Warning Mode” to “Flashing Caution Mode” was made.

John said with the approval of these drawings and the later addition of the two new drawings mentioned earlier the TC drawings will be complete.

Discussion points were:

- In response to comments John said at one time there were detail sheets for TC 17 and 18 for single and multi-line, but were not approved as Standards. They are still being used as detail sheets. Discussion continued about the usage of these sheets.

- Following a comment by Shana there was a short discussion on epoxy.

- There was no further discussion.

Motion: Darrell Giannonatti made a motion to approve the TC Supplemental Drawings and deletion of TC 5 and TC 9 as discussed and modified. Seconded by Boyd Wheeler. Passed unanimously.

6. Supplemental Specification 02373M, Riprap (Agenda Item 6) - Presented by Degen Lewis.

Degen said the sodium soundness test was previously deleted when the current Supplemental Specification was approved last summer. Based on a failure this spring Degen said they want to put the test back in and modify how the test is accomplished.

Discussion points were:

- There was no significant discussion.

Motion: Tim Biel made a motion to approve Supplemental Specification 02373M as presented. Seconded by Darrell Giannonatti. Passed unanimously.

7. Supplemental Specification 03055, Portland Cement Concrete (Agenda Item 7) – Presented by Degen Lewis.

Degen said this change was a complete rewrite to accommodate current practice. He said the table of classes was simplified. He said this change was a joint effort with industry.

Discussion points were:

- There was no significant discussion.

Motion: Darrell Giannonatti made a motion to approve Supplemental Specification 03055 as presented. Seconded by Tim Biel. Passed unanimously.

8. Supplemental Specification 03390, Concrete Curing (Agenda Item 8) – Presented by Degen Lewis.

Degen said the entire specification was reviewed and updated. He said the most significant change was the removal of the references to the Accepted Products List with all requirements now shown in the specification. The specification was also updated to reflect current practice and equipment.

Discussion points were:

- Darrell asked about the request for a cold weather curing time. Degen said that would come into play with the specification for a particular item like structural concrete.

- There was no further discussion.

Motion: Tim Biel made a motion to approve Supplemental Specification 03390 as presented. Seconded by Boyd Wheeler. Passed unanimously.

9. Supplemental Specification 03392, Penetrating Concrete Sealer (Agenda Item 9) – Presented by Degen Lewis.

Degen said the entire specification was reviewed and updated. He said the table of requirements was removed following coordination with Research and Structures. Degen reviewed the other changes indicating that they do not want the sealer applied to Portland Cement Concrete Pavement.

Discussion points were:

- There was no discussion.

Motion: Darrell Giannonatti made a motion to approve Supplemental Specification 03392 as presented. Seconded by Tim Biel. Passed unanimously.

10. Supplemental Drawing PV 4, Concrete Pavement Details for Urban and Interstate (Agenda Item 10) – Presented by Degen Lewis.

Degen said the dowels were removed from the center of the lane in order to save money. He said the drawing was reorganized to make the details clearer. He said the callouts on the Typical Pavement Panel Replacement detail were increased in size and relabeled to make the detail clearer as to what was happening.

Discussion points were:

- Boyd asked about updating the Typical Pavement Panel Replacement detail to show the gap in the load transfer bars so the schematic at the bottom matches the details at the top. Tim said no because that is a different issue, going on to explain.

- There was no additional discussion.

Motion: Darrell Giannonatti made a motion to approve Supplemental Drawing PV 4 as presented. Seconded by Tim Biel. Passed unanimously.

11. Supplemental Specification 02735, Micro-Surfacing (Agenda Item 11) – Presented by Tim Biel.

Tim said this is a rewrite of the Special Provision they have been using for a while. He said they updated formatting and mix design procedures. Tim said there is a lot of markup on the draft but the change is fairly straight forward.

He said one issue came to light following submission for the agenda. Tim asked if the Committee wanted to address it now or bring it back later. He said it also applies to 02789, Asphalt Slurry Seal Coat.

Tim said in some cases where you meet aggregate properties the blending of the aggregate has to be done from two different sources. He said stockpile acceptance requires double handling of the material to get to that point. Tim said he asked those who commented if allowing continuous sampling of product being sent to the job is not too different than what is done with hot mix asphalt. Those bringing up the issue indicated they would look at the proposal. Tim said the only issue that comes from that is UDOT does not have the resources to do the testing.

Discussion points were:

- Someone asked if this was an acceptance test. Tim said it would be between that and verification from the DOT.

- Tim commented that the supply is continuously being tested rather than from the stockpile. He said if it is too far out you could actually stop work. He said the question was raised as to who gets the disincentive. Is it the aggregate supplier or the person supplying the slurry? Tim said he could see that as a problem.

- Tim said our contract is with the general contractor and that he didn't know if he needed to resolve that issue. He said we have one contact, not with the supplier or the aggregate person. He said we apply the penalty and they figure out how to do it.

- Darrell said he agreed with Tim that this was too much to cover today and that it should be pulled and brought back. Tim said he wanted to discuss the item now to see how to proceed and that he didn't have a problem bringing it back next time. Darrell said he didn't want to go any further with it now.

- Darrell asked if Tim wanted to cover the other changes now so that didn't have to be done the next time. Jim said he thought we would end up talking about the changes next time anyway. Tim said this applies for the next agenda item as well.

- Jim asked if any motion was needed. Barry said no but said he would like a brief sentence or two for the action item. Tim said he would resubmit with the recommendations.

- Tim said the intent was to allow either option and not get rid of the stockpile sampling, allowing the option based on project needs.

Action Item: Tim Biel to update Sections 02735, Microsurfacing and 02789, Asphalt Slurry Seal Coat to meet sampling requirements and present all changes to the two Sections at the August 2007 meeting.

12. Supplemental Specification 02789, Asphalt Slurry Seal Coat (Agenda Item 12) – Presented by Tim Biel.

Item deferred per Agenda Item 11 discussion and action item.

Discussion points were:

- None

13. Supplemental Specification 02786, Open-Graded Surface Course (Agenda Item 13) – Presented by Tim Biel.

Tim said the change included a lot of format changes. He said they also addressed significant sampling and testing procedures and modified the incentives/disincentives.

Discussion points were:

- Jim commented on the submittal sheet. He said this item is a "big ticket" item for us and "no comment" is shown throughout the submittal sheet. Tim said that everything they do at Standards Committee goes through the Pavement Council first with representatives from suppliers and contractors. Tim said they know about everything before it is approved. Jim congratulated Tim on a good job.

- Tim said he could go through the change line by line if wanted. Jim said that was not necessary.

- Tim said you will notice is a general trend with Materials specifications under article 1.5, Acceptance. He said their acceptance procedures are basically the same as the Minimum Sampling and Testing Requirements. He said they are taking the specifics out of the specifications and are referring to the Minimum Sampling and Testing Requirements.

- Mont asked if this addresses where the sample is taken. Tim asked John about what was done. John said he didn't think it changed and that you needed to refer to the Minimum Sampling and Testing Requirements. Discussion continued on the requirements.

- John said another major change you may see that wasn't in here before and will also see in Hot Mix Asphalt is that this specification gives the RE the option to require lime marination at any plant. John said if they go into any plant and find that the lime slurry is turned off and lime is not going into the mix the RE can say "time-out," start marinating your stockpile.

- There was no other discussion.

Motion: Darrell Giannonatti made a motion to approve Supplemental Specification 02786 as presented. Seconded by John Leonard. Passed unanimously. Tim said he would provide an updated copy.

14. Sub-Committee Update on other Standards Approvals (Agenda Item 14) – Presented by Robert Miles and Barry Axelrod.

Robert said as per direction from the Standards Committee they have a sub-committee reviewing and approving selected items. He said currently they have approved 10 specifications for the 2008 update. A list of the included sections was handed out.

Robert said for Section 02056, Embankment, Borrow, and Backfill they have approved everything to date. He added that Geotech may have some other issues they want to bring up, but the sub-committee is comfortable with where it stands.

Robert said editorial changes were approved for Section 02624, Approach Slab Catch Basin for approach slabs. Robert said changes to Section 02712, Lean Concrete Base were also approved. John Butterfield said the change included formatting and some updating to eliminate conflicts with curing and redundancies.

For Section 02721 Robert said some modifications were made. Barry pointed out that the Supplemental was approved last time so the minor changes are ready to go without coming to the full Committee as indicated on the handout.

Robert said Sections 02751, Partial Depth Repair for Concrete Pavements; 02753, Full Depth Slab Replacement for Concrete Pavement; 02825, Cattle Guard; 02841, W-Beam Guardrail; 03311, Joint Closure; and 03339, Precast Concrete Deck Panel were also approved. He said the last one was a follow up on some time issues that were resolved. Robert said the non-shrink grout issue on the last one was also resolved.

Robert asked if there were any questions or concerns on what they had done so far.

Discussion points were:

- Tim asked about a previous statement about not allowing precast catch basins in the approach slab. Boyd commented about various related issues. Tim said he didn’t understand it before.

- Jim asked if this was the sub-committee approval process that was agreed upon. Barry said it was.

- There was no further discussion.

Motion: Tim Biel made a motion to approve the items approved and presented by the sub-committee. Seconded by Darrell Giannonatti. Passed unanimously.

15. Review of Assignment/Action Log (Agenda Item 15)

Jim asked Barry to cover the Action Log.

- Item 1, Supplemental Specification 01554. No change in status. Not due until August. Barry said it is one of John Leonard's.

- Item 2, Standard Drawings BA 4E, W-Beam Guardrail Installations and ST 8, Plowable Pavement Markers. Being looked at in relation to deleted sections 02762, Plowable Pavement Markers and 02773, Asphalt Concrete Curb. Not due until October. Barry said if updates are wanted for the 2008 version it has to be completed by October. Shana commented that she thought a decision was made on the plowable pavement markers. John Leonard said the item was to make sure the drawing matched the specification. Barry said the item was to make sure the drawings matched what was already approved for the specifications.

- Item 3, Supplemental Specification 02221, Remove Structure and Obstruction. Verify changes with Construction. Not due until October. Barry said Boyd is reviewing this one. **Post-meeting update:** Information received as required. Item closed. To be published with the 2008 updates.

- Item 4, Supplemental 03339, Precast Concrete Deck Panel. Approved by sub-committee. Update provided to Standards Committee under Agenda Item 14. Approved. Closed.

- Item 5, Supplemental Specification 02822, Right of Way Fence and Gate and Supplemental Drawings FG 1A, 1B, 2A, and 2B. Cost-benefit information to be provided. Barry said Paul West was to work with Research to get the needed information. Shana said they are still working on it and coordinating with Maintenance. Not due until October. **Post-meeting update:** Information received. Will be on August agenda.

- The status report as handed out at the meeting follows:

Action Item Update for June 28, 2007 Standards Committee Meeting

(As of June 12, 2007)

Item 1, Supplemental Specification 01554M, Traffic Control: New target date was set to August 2007 meeting during the April 2007 meeting. From John Leonard: We will incorporate it as requested by the Standards Committee into the Traffic Spec 01554. This will be done in the review and modifications to this spec, before the August deadline.

Item 2, Standard Drawings BA 4E, W-Beam Guardrail Installations and ST 8, Plowable Pavement Markers: Target date no later than October 2007 meeting. No new information.

Item 3, Supplemental Specification 02221, Remove Structure and Obstruction: Changes need to be verified so that Construction and Structures inputs are all complete. Target date no later than October 2007 meeting. No new information.

Item 4, Standard Specification 03339, Precast Concrete Deck Panel: To be completed through the special sub-group instead of the full Standards Committee. Target date no later than October 2007 meeting. No new information.

Item 5, Supplemental Specification 02822, Right of Way Fence and Gate and Supplemental Drawings FG 1A, FG 1B, FG 2 A, and FG 2B: Not approved during April 2007 meeting. Additional work needed to include coordination between Research and Enviromental. Target date no later than October 2007 meeting. No new information.

16. Meeting Improvements (on-going agenda item) (Agenda Item 16): Robert Miles commented about marking drawings that go out for review as to what was changed. He suggested a bubble or something in the PDF file. He said that was a request from the regions to help review the drawings faster. Jim said he received something the other day that had electronic yellow post-it notes included. Jim said the files came from Nathan Lee in Region 1. Barry said it could be related to the later versions of software that some people have. Barry then referred to the comment log provided by John Leonard for his agenda items that supports his items. Barry said that method addresses the issue. John said for minor changes the bubbles might be fine. Jim asked about documenting the process if we were to try to standardize this approach and give the regions some notes. Barry said the notes from this meeting should cover what we are looking for. John discussed his process and what he does in completing his comment log. John also said sometimes we are vague and don't give the regions the type of closure they might be looking for. Jim said he would think of those suggestions as "precious pearls" that have to be protected. Jim said you have to let people know why you rejected their suggestions so they understand and still feel like giving more in the future. Jim said our feedback is a very important piece of what we do.

17. Other Business: None

A motion was made, seconded, and approved to adjourn.

The next regular meeting of the Standards Committee has been scheduled for Thursday, August 30, 2007, at 8:00 a.m., in the 1st floor conference room of the Rampton Complex.

Approval of Minutes: The foregoing minutes were approved at a meeting of the Standards Committee held _____, 2007.

Assignment/Action Item Log

Date Initiated/Updated	Item #	Action	Assignments	Status	Target Date
August 25, 2005	1	- Supplemental Specification 01554, Traffic Control (originally tracked as 00555M, Prosecution and Progress, Limits of Operation): Coordinate the required action to have the process placed in the proper location, to the detail necessary and bring the recommendation to the Standards Committee for approval.	John Leonard	Open	August 2007 meeting
October 27, 2005		- Item not ready. To be reviewed by the Operations Engineer. Target date updated.	Tracy Conti Robert Hull		
February 23, 2006		- Direction being reviewed by upper management.			
April 27, 2006		- Still being review by upper management for direction.			
June 29, 2006		- No change other than item may be on hold.	Robert Hull		
August 31, 2006		- No change.			
November 30, 2006		- Item being reviewed. Changed to track as Section 01554.			
February 22, 2007		- Still being worked			
April 26, 2007		- This item was incorporated at the request of the Standards Committee into the Traffic Spec 01554. This will be done in the review and modifications to this spec, before the August deadline			
June 28, 2007		- No new information. Not due until August.			

Date Initiated/Updated	Item #	Action	Assignments	Status	Target Date
April 26, 2007 June 28, 2007	2	- Standard Drawings BA 4E, W-Beam Guardrail Installations and ST 8, Plowable Pavement Markers to be looked at for updates related to the deletion of sections 02762, Plowable Pavement Markers and 02773, Asphalt Concrete Curb. For inclusion in 2008 version. - No new information. Not due yet.	Robert Hull Mike Donivan (BA 4E) John Leonard (ST 8)	Open	No later than October 2007 meeting.
April 26, 2007 June 28, 2007	3	- Supplemental Specification 02822, Right of Way Fence and Gate and Supplemental Drawings FG 1A, FG 1B, FG 2A, and FG 2B to be brought back for approval at a later time. Research and Environmental to work together to gather more data and provide cost - benefit information. - Post-meeting update: Information received.	Paul West and Research Division	Open	No later than October 2007 meeting. Will be on August agenda.
June 28, 2007	4	Supplemental Specification 02735, Micro-Surfacing. Update Sections 02735 and 02789 to meet sampling requirements.	Tim Biel	Open	August 2007 meeting.
June 28, 2007	5	Supplemental Specification 02786, Open-Graded Surface Course. Tied to item 4.	Tim Biel	Open	August 2007 meeting.

Closed Items From Last Meeting (June 28, 2007)					
Date Initiated/Updated	Prior Item #	Action	Assignments	Status	Target Date
April 26, 2007 June 28, 2007	3	- Supplemental Specification 02221, Remove Structure and Obstruction. Boyd to verify with Karl that all changes have been included based on the meeting discussion. - Post-meeting update: Information received as required.	Boyd Wheeler	Closed	Closed
April 26, 2007 June 28, 2007	4	- Section 03339, Precast Concrete Deck Panel. To be brought back for approval through the special sub-group. - Approved by sub-committee.	Boyd Wheeler David Deng	Closed	Closed

Standards Committee Submittal Sheet

Name of preparer: Paul West
Title/Position of preparer: Wildlife Biologist
Specification/Drawing/Item Title: Type G, Right of Way Fence (Deer Barrier)
Specification/Drawing Number: Drawings FG 1A, 1B, 2A, and 2B
Specification Sheet – Section 02822, Right-of-Way Fence and Gate
Enter appropriate priority level:
(See last page for explanation) **3**

Sheet not required on editorial or minor changes to standards. Check with Standards Section.

NOTES:

1. All Submittal Sheets must be completed and sent to the Standards and Specifications Section by the Standards Committee suspense date as shown on the Web. (http://www.udot.utah.gov/index.php/m=c/tid=303)
2. The Preparer of the Submittal Sheet or the Standards Committee member (or authorized substitute) responsible for the submittal must be present at the Standards Committee meeting and capable of discussing and answering all questions related to the submittal. The item will be postponed to a later meeting if one of these people is not present.
3. Notify the Standards and Specifications Section immediately of any changes that impact the presentation to include absence of sponsor or delay in presentation.

Complete the following: (Use additional pages as needed.)

A. Why? Detail the reason for changing the Standard (Specification or Drawing), what has initiated a new Standard, or what has caused a new or changed item of interest.

Increasingly, the Utah Division of Wildlife Resources (UDWR) is finding wild animals entangled in our 6-foot, Type-G wildlife fences with 6” x 6” wire mesh, or impaled on fence posts.

In addition, it has been demonstrated that deer can work the openings in the current 6”x6” mesh with their snouts and hooves, making the openings wider until they are able to crawl through (Bissonette and Cramer, Utah State University, personal communication).

Based on recommendations from the UDWR, it is proposed we use an 8-foot high fence, rather than the 6-foot fence we are currently using. This new standard would also require the use of V-mesh fencing material. This type of wire mesh prevents deer from working the openings in the mesh, saving maintenance time and costs, and helping to prevent wildlife from getting on the right-of-way.

This new standard would only be required where the UDOT wildlife biologist, or wildlife biologists from the Utah State Division of Wildlife Resources have determined that wild animals, primarily deer, elk, and moose, are constituting a hazard to motorists and/or are being killed in great numbers on our state’s highways and freeways, and thus need to be prevented from getting

onto the right-of-way. This 8-foot, V-mesh fencing should only be used with wildlife escape ramps and crossing facilities that would allow for animals to cross the highways and freeways safely.

B. How is Measurement and Payment handled? Existing (from the measurement and payment document), modified, or new measurement and payment to be included with all Standard Specifications or Supplemental Specifications.

Existing (by feet)

C. Stakeholder Notification for AGC and ACEC:

By email provide the AGC and ACEC Standards Committee member a copy of all pertinent information relating to the specification or drawing. Detail all responses below. Indicate if no comments were received.

Note: There is a two-week response time set for this item.

AGC Comments: (Use as much space as necessary.)

ACEC Comments: (Use as much space as necessary.)

Tylor Yorgason – P.E., Civil Science

I received no comments from ACEC regarding the updated Specifications for Right-Of-Way Fence and Gate, and 4 updated FG series drawings. Thanks for the chance for ACEC to comment on the changes.

D. Stakeholders? From the list provided, document the stakeholders contacted, detailing: the company, name of contact, how contacted (by phone, email, hard copy, or in person), concerns, and comments of the change. Stakeholders:

Note: There is a two-week response time set for this item. Allow Stakeholders two weeks to process and respond to coordination requests. All areas should try to complete review and comment as soon as possible but within two weeks.

In-house (for example, preconstruction, materials, construction, safety, design, maintenance) (Include all applicable in-house areas even if not listed above.)

Rex Harris – Pre-Construction Engineer, Region 1

I have no negative comments to make about the standard drawing as proposed.

Brent DeYoung – Sr. Project Manager, Region 1

I reviewed the information and the comments the others made covered my issues as well.

Randy Jefferies – Engineering Manager, Region 1

FG 1A and FG 2A:

1. Remove the note under Type F fence "To be installed in deer country."

Type F fence eliminated.

2. Revise "NOTE" to "NOTES ON TYPE G FENCE"

Done

3. Combine the first 3 sentences of Note 1 to "LAP THE 50-inch TALL MESH WIRE 4 inches AND TIE OR CLAMP TOGETHER AT NO GREATER THAN 2 foot SPACING."

Done

4. Revise "THEN" to "THAN" in Note 3.

Done

Scott Nussbaum – Engineering Manager, Region 1 Maintenance

I'm not opposed to the change, but here are just a few notes:

I think that most of our maintenance on fence is due to snow pressure and vandalism. I suspect an eight-foot fence will be MORE difficult to maintain, requiring ladders, etc. for regular work.

If properly constructed, snow pressure should not be a consideration. In speaking with a representative from Steve Regan Company, he said V-mesh fences are secure in any kind of weather, and are difficult for animals, elk and moose included, to knock over. The 10-foot steel T-posts, if properly buried to 20" depth, are secure enough to withstand almost any kind of

pressures. Therefore, maintenance due to wildlife damage should be almost nil. As for vandalism, that can't be predicted or prevented with any kind of fence. However, the V-mesh is much more difficult to cut through which should discourage many vandals.

The increased cost does not include additional post cost, foundation digging, or the increased labor associated with a taller fence.

I have revised the cost estimate to reflect a more realistic cost.

With the additional height and the tighter mesh, does the design compensate for the wind / snow pressure, or does the post spacing also need to be modified? (I'm concerned about the T-posts especially).

In speaking with the sales representative from Steve Regan Company, he assures me that if the 10-foot T-posts are properly buried, the fence should stand up under any kind of pressure.

The drawings do not show the V-Net pattern.

Fixed

Chris Lizotte – Environmental Manager, Region 1

Comment: No changes, except to say that it looks a little low to be a deer barrier...??

A. 8 feet is low? It's got to be better than the 6-foot fence we are using now.

Comment: Deer normally will not jump a 6-foot fence, but if chased or threatened, they can clear an 8-foot fence on level ground.

A. Perhaps. But it will block them better than the 6 foot fence. That's the council I've been given from John Bissonette and the UDWR biologists. With the V-mesh they can't tear it down, or poke holes in it as well either. That's the reason for all this change of specs.

Comment: I agree this is a good change.

Bill Lawrence – Pre-Construction Engineer, Region 2

Q. I've tried search on the web for the V-net, or V-web mesh fencing your calling out and can't find it. Where is it to be obtained?

A. I think the preferred name for this kind of fence material is V-mesh. There are two places. Steve Regan in Salt Lake and Davis Wire in Pueblo, Colorado. Actually, Regan gets their V-Mesh from Davis Wire who is the manufacturer.

Q. One more question, the drawings show square openings. Does the V-net, or V-web mesh, still have square openings? Based on the name I pictured a different style. If its still as on the drawing, I'm ok with it. If it doesn't match what is on the drawing, it should be fixed.

A. You're right, it needs to be fixed. I just didn't have a good drawing of the V-Mesh before this went out. It will be shown on the final drawings.

Joe Kammerer – Sr. Project Manager, Region 2

I have no comments

Kevin Kilpatrick – Environmental Manager, Region 2

I don't have any comments or suggestions for the deer fence. The only question I have is whether the increased cost would make them less likely to get installed in certain areas (probably more a question for the PMs). I don't doubt the increased effectiveness of the higher fence.

Project managers and designers need to specify this type of fencing after consultation with and recommendations from the UDOT wildlife biologist, or biologists from the Utah Division of Wildlife Resources.

Brent Schvaneveldt – Pre-Construction Engineer, Region 3

No comment

Merrell Jolley – Sr. Project Manager, Region 3

No comments.

Rich Crosland – Environmental Manager, Region 3

Q. Shouldn't there be some distance specified between the barbed wire?

A. *No barbed wire.*

Q. well whatever kind of wire is on the typicals.

A. *The only wire we're suggesting is the V-mesh. No single wires on the Type-G deer barrier fence.*

Bret Sorenson – Pre-Construction Engineer, Region 4

I haven't had a chance to take a real close look, but it makes sense if the 6' isn't working. I would ask if 7' works. Also, it doesn't appear that any of our construction personnel or contractors have been included in this review. I think they're the most important group to ask.

A 7-foot fence would work a little better than 6-foot fences, but an 8-foot fence is what wildlife biologists across the nation, as well as internationally, recommend, and it works even better than a 7-foot fence. It should not cost much more than the 7 footer, if any more.

As for whom I have contacted, I have contacted everyone who was recommended to me.

Mike Miles – Sr. Project Manager, Region 4

On Fig 1A for the typical for the type G deer barrier, notes 1 and 2 say "lap the 50 inches by 4 inches". It sounds awkward to me. It might sound better to say "lap the 50 inch mesh by 4 inches". This isn't critical but may clarify things some.

Done

Fred Jenkins – Engineering Manager, Region 4

Sum of individual dimensions exceeds 12' post height by 2" on FG1A. Also, the stay appears to be 50" long on the drawing, not 54".

I think the dimension is right (the 12-foot T-posts have been replaced with 10-foot T-posts). The stays have been eliminated.

Q. Your 1 inch Maximum Allowable Gap will result in the burying the bottom wire - is this what you want?

A. Yes. The notes on the drawing have been updated to reflect this.

Steve Ogden, Engineering Manager, Region 4

I have made a few comments on FG 1A and FG 2A. I sent these drawings to Dave Babcock, who may have additional comments. (Drawings are included at the end of this document)

Comments on Figure FG 01A:
Referring to the drawing labeled “Typical”. Is this value 4” or 5” for Type G?

This question refers to the top 4” (not 5”) of the wood post on the drawing labeled “Typical”. The figure clearly reads 4”. Nothing was changed on this drawing. However, the height of the wood post, or the T-post, above the V-mesh is not important.

Referring to the drawing labeled “Typical”. Should this number be 8’-4” for the new Type G?

This question refers to the height of the post shown on the “Typical” drawing that currently indicates for Type G fences that the height should be 7’. This has been changed to 8” 4”.

Referring to the drawing labeled “Type G”. The way I read this, there is 102” above ground and 44” below ground making a total of 146”. Should the above ground dimensions equal 100”?

I think it does add up to 100” (50” mesh + 50” mesh – 4” overlap + 4” top of post = 100”)

Comments on Figure FG 2A:
Same comments as FG 1A

Clark Mackay – Engineering Manager, Region 4

Here are my comments relating to the recommended changes in deer fence.

<u>Sheet FG 1A Typical detail above Type G fence detail.</u>
Move arrow for top wire so that it points to the dimensional line for 4".

Done

Under type G change 7'-0 to 8'-4.

Done

Type G detail change 4" overlap to 6".

No. 4” over lap is needed to achieve 96” height.

If you really want 4" then you will need 12'-2 posts.

Changed to 10-foot T-posts and keeping with 12-foot, 4-inch, or 5-inch wooden posts. The height should still work.

Note 1 change 4" to 6".

No. 4" over lap is needed to achieve 96" height.

Note 2 conflicts with standard specification 2822. If you want to change the type of wire then you will need to change the standard specification.

Done

"Gage' is spelled 'Gauge'. Note 3 change 'then' to 'than'.

Done

<u>Sheet FG 1B</u>
Detail line brace for type G fence change 'interwals' to 'intervals'.

Done

Bottom right corner move heading 'Post and wire location' so as to be centered under the detail rather than along side it.

Not part of this exercise, but done anyway.

Add 'For limited access and no access highway R/W lines'.

Not sure what he's talking about, but I think it's outside the scope of this exercise.

<u>Sheet FG 2A</u>
In the detail in the upper part of the sheet near the center of the detail is a dimensional line and arrow that points to nothing. Please remove this.

Not part of this exercise, but noted anyway.

.
<u>General notes on Sheet FG 2A:</u>
Note 1. Change 'Class B' to 'Class B(AE)' to match standard specification.

Not part of this exercise.

Note 2 remove second comma between D & E.

Not part of this exercise, but done anyway.

Note 3 change 'psts' to 'posts'.

Not part of this exercise, but done anyway.

Note 5 change 'barber' to 'barbed'.

Not part of this exercise, but done anyway.

On deer fence detail and in note 1 change overlap to 6".

No. 4" overlap is needed to achieve 96" height.

Again note 2 does not match standard specification and has spelling error.

It matches the standard specifications proposed to go with these changes. Spelling error changed.

Note 3 change 'then' to 'than'.

Done

<u>General discussion:</u>
You show additional horizontal wires attached to mesh at bottom. Is there a purpose for these additional wires? I recommend that you use straight 6" spacing on horizontal wires. This would allow the contractor to use the same mesh for both top and bottom.

There are NO horizontal wires. Perhaps what Clark is seeing is the exaggerated lines where the 4" overlap occurs.

Have you checked to see if the 50" mesh is available. You need to make sure that this is common size and available and does not require a special order to get this size. The same applies to the additional horizontal wires at the bottom if you feel they are necessary.

V-mesh is available in 50" rolls. As for horizontal wires at the bottom, there are none.

I do not feel the 1" gap at the bottom of the fence is realistic. Deer fence does not usually go on easy or smooth terrain. Are you planning on having the contractor grade between line posts to achieve this? This will increase the environmental impacts. If not then the contractor will have to place many tie down rocks as shown on sheet FG 1B Typical sag detail. This is going to substancially increase the cost of installing deer fence. The contractor will still need to do some grading to achieve the 1" limitation.

Contractor should be required to bury the wire if needed. No grading, other than ditching, should be necessary.

Dave Babcock – Roadway Operations Safety Manager, Region 4

I'm glad to see we have changed to two pieces of 50" net fence and no barb, which will make for an 8 foot fence, but I am concerned about the 12 foot posts. I realize we need that size of post to hold the weight, but it is almost impossible to pound a 12 foot post. The 10 footers have been a trick, we put a guy up in the bed of a 1 ton and use the post pounder crane to lift the weight of the pounder. I'm not sure we can reach to 12 feet high??? Do we really need 12 footers? We also don't need any post height over the top of the fencing.

12' T-post have been replaced with 10' T-posts. As for post height over the top of the fencing, I agree. We don't need that if it's not possible to achieve.

Mike Seng, Engineering Manager, Region 4

No comments

Randall Taylor – Environmental Manager, Region 4

Initial questions: When I called Steve Regan they said the longest available metal post is 10-ft. Do you know if 12-ft metal posts will be available?

12' T-post have been replaced with 10' T-posts.

Looking at the dimensions shown on FG 2A for Type G (middle left detail), do you read this as 44" below ground, then 1" to bottom of net wire, then 101" from bottom of wire to top of post?

This would be a total of 146" for posts that are 144" in length. Maybe I'm reading it wrong. The 44" below ground seems like a tremendous depth that would be difficult to achieve in rocky conditions. Is this being used elsewhere?

The details have been changed. For T-posts, 20" below the ground is all we need. Then, two 50" rolls of V-mesh, overlapped by 4". A 1" gap at the bottom is allowable where necessary. The length of the post above the mesh is not important.

Thanks for your work on this much needed subject.

Additional Comments:

1) Are 12-ft "T", metal posts, available? When I called Steve Reagan Co. they said the longest available metal post is 10-ft. I think it is possible to get more fence height out of the 10-ft posts by decreasing the depth placed in the ground and by decreasing the height of the posts above the top of the fence wire.

No, the tallest T-posts are 10'. I've changed the drawings to reflect this.

2) I didn't know there was much if any problem with the 6" X 6" net. I think this should be reviewed with Bruce Bonebrake and others, such as UDOT Maintenance people. I'm not sure the extra cost is warranted. Should other alternatives be considered, such as a 4"X4" net?

According to Doctors John Bissonette and Patricia Cramer, Professors of Wildlife Biology with Utah State University, deer often work the 6" x 6" mesh openings with their noses and hooves until they can crawl through. This adds to maintenance costs, but more importantly to wildlife mortality and vehicle safety issues.

3) Note #2 on Drwg FG 2A provides that Type A,B, D, E, and F line posts shall be made of Tee channel with a minimum weight of 1.33 lb/ft. The minimum weight is not defined for Type G line posts. This particularly needs to be addressed if posts longer than 10-ft are specified. I think that 10-ft posts have been the 1.33 lb/ft – at least they visually appear to be the same weight as the shorter posts. I'm thinking this weight is determined by the manufacturer and the contractors order 10-ft Tee posts.

We're using 10' T-posts. Note changed to reflect T-posts for Type G fence fits this spec. A representative from Steve Regan Company assured me that the strength of the 10' T-posts is sufficient to hold back most pressures, including a charging elk or moose.

4) On FG 2A the middle left detail for "Right of Way Fence Type G" fence has dimensioning that is difficult to decipher. It looks like 44" of post below ground, then 1"

to bottom of net wire, then 101” from bottom of net wire to top of post. This makes a total of 146” for posts that are 144” in length.

Below ground has been changed to 20” with 10’ T-posts. Bottom wire to maximum of 1” Top of post to be “not more than 4” above the V-mesh.

I wonder about the 44” of post below ground. This seems like a tremendous depth in almost any ground, and one that is not likely to be achieved in ground with many rocks. Is this depth of burial needed? It will certainly add to the installation time and effort, which means costs.

Changed to 20” for T-posts.

5) Two stays are shown in between line posts on FG-2A, left middle detail for “Right of Way Fence Type G”. They look like the length should be 50”. Is this correct and is this length available?

Stays are not needed. Drawing changed to reflect this.

6) If the change is made to 12-ft line posts, then the brace posts may need to be reviewed. These are called out in Note 3 on Drwg. FG 2A.

Lines posts changed back to 10’

7) For Note 6, on Std Drwg FG 2A, Corner post braces for Type G fence are required for line posts deviations greater than 15 degrees. I think compliance would be better if we said use brace posts for line post deviations greater than 3-ft in10-ft, since this is easier for fencing crews to follow. They don’t typically have a means of measuring angles.

Changed

If this change is made the 30 degree threshold for line posts deviations in other types of fences should also be change to 5.8-ft in 10-ft, although this seems high. Maybe it should be for deviations greater than 5-ft in 10-ft.

Changed

Boyd Wheeler – Engineering Manager, Structures

Paul, please consider changing the note under the type F fence to clarify when this fence should be used. i.e. used in deer areas unless specifically directed otherwise.

Type F fence eliminated.

Q. With the new height of type G barrier fence will our deer escape ramp standard need to be modified?

A. I don't think they'll need to change. Do you see a reason for changing them?

No, I think the type G will tie into them alright on second look.

Lynn Bernhard – Engineering Manager, Maintenance Planning Division

I have a few comments
Dwg FG 1A Type G fence note 1 - specify the spacing of mesh ties or clamps. If we say not more than 24" we will get 24" every time. I think the fabric should be connected 12 inches on center with metal ties or clamps.

Note changed to specify 12" spacing of clamps, using hog rings, or other types of ties or clamps.

Specify distance that wire stays extend into lower course of fabric. I recommend 6 inches.

Stays not needed with V-mesh. Drawing changed to reflect this.

Dwg FG 1A Type G fence note 2 - specify doubled and twisted 12½ gauge line wires with 14 gauge V-wires

Done on Spec sheet and both drawings.

Dwg FG 1A Type G fence note 3 - replace "THEN" with "THAN"

Done

Dwg FG 1A Type F fence - replace the barbed wire symbol for the top wire with plain wire. Change wire to ground distance to 1" to match rationale for bottom of fabric on type G fence

Type F fence eliminated.

Dwg FG 2A - note 2 - add note for Line posts - Type G Fence.

Done

Copy text from note 2.2 and 2.3

If these notes are part of the Standard Specification, do they need to be on the Standard Drawing too?

Specification:
02822 1.3 Add citation for ASTM A 116 Standard Specification for Metallic-Coated, Steel Woven Wire Fence Fabric

Done.

02822 1.3 Add Specification for Zinc Coated Chain-Link Fence Fabric ASTM A 392

Done

02822 2.2.A - specify doubled and twisted 12 ½ gauge line wires with 14 gauge V-wires. On chain link fencing - specify wire gage - I recommend galvanized 9 gage 2-3/8" mesh.

Done

Shane Marshall – Director, Environmental Services

Looks fine

Rebecka Stromness – Environmental Program Manager

No Comment

Robert Miles – Preconstruction Engineer, Project Development, Standards

FG 1A: Call out required spacing for staples?

Note changed to specify 12" spacing of clamps, using hog rings, or other types of ties or clamps.

On Typical Type G post shows 7' not 8'4"

Done

FG 2A
Call out method and spacing of attaching fencing to posts

Note changed to specify 12" spacing of clamps, using hog rings, or other types of ties or clamps.

FG 2B
Update Typical sag section to metal posts

Done.

Section 02822
I don't believe highlighted line of text is necessary. Combine with 3.2 M

Done.

Rukhsana Lindsey – Director of Research

Looks good

Contractors (Any additional contacts beyond "C" above.)

None

Suppliers Contacted:

Steve Regan Co.
Davis Wire, Pueblo Colorado (manufacturer)

Consultants (as required) (Any additional contacts beyond "C" above.)

None

FHWA (To be accomplished as part of the two-week process before submitting to the Standards and Specifications Section for inclusion on the Standards Committee agenda.)

(This is in addition to the requirements of UDOT Policy 08A5-1, procedure 08A5-1.3.)

Anthony Sarhan - FHWA

We have reviewed the submittal and offer a comment and a question.

First, no barbed wire is recommended or even suggested for the new Type G Deer Barrier fence. Barbed wire is mentioned in the update to section 02822 ROW Fence-Gate (section 2.3) which was included in your e-mail.

Comment: please limit use of barbed wire to rural areas. Barbed wire should not be used in urban areas.

No barbed wire is suggested for the Type-G fence. Any other recommendations are beyond the scope of this exercise.

Second, wood posts would be used wherever they are being used currently. I'm not the one who would make that decision. It would be made by whomever is building the fence, or the project manager.

Question: Can you please explain where wood posts are expected to be used throughout Utah?

Steve Regan Company recommends wood posts every 165 feet where rolls end, or at corners. At most, every 100 feet. The V-mesh fencing material does not require more than that.

Others (as appropriate)

None

E. Other impacted areas, systems, or personnel. (Consider all impacts and possible changes to these areas during the preparation process. Coordinate with all appropriate areas for the respective item. List all impacts and action taken.)

1. Minimum Sampling and Testing Guide (MS&T Guide)

   N/A

2. Business Systems (Electronic Bid System, Project Development Business System, Electronic Program Management, Computer-Aided Drafting and Design, etc.)

N/A

3. Implementation Plan (Provide detailed instructions on how the subject item will be implemented to include notification of all interested parties and training requirements.)

Preconstruction, design, construction, maintenance, and fencing contractors will begin using the revised Type G, Deer Barrier, Right-of-way Fence – Standard Drawings (FG series).

F. Costs? (Estimates are acceptable.)

1. Additional costs to average bid item price.

V-mesh
Rolls come in 50” x 165’ size. Cost of 50” rolls is about $1.50 per foot (cost estimate by Steve Regan Co.). Two rolls overlapped by 4 inches, as would be required to make an 8’ fence, would cost $3.00 per foot.

Current price for 6” x 6” mesh wire fence (two 47” rolls overlapped by 2 inches) is $1.50 per foot (cost estimate by Steve Regan Co.).

V-Mesh will constitute an increase of approximately $1.50 per foot. However, this cost will be offset by greatly lowered maintenance costs. Almost no maintenance is required if properly installed.

As an alternative, 8-foot chain-link fencing may be substituted. However, the cost of chain-link is approximately $7.06 per foot (cost estimate by United Fence Co.).

T-posts every 10-feet (no increase in spacing required)

Cost of 8-foot t-posts (current standard)	$4.70 each
Cost of 10-foot t-posts	$10.70 each

4”-5” Treated Wood Posts (suggested 1 post at most every 100 feet, or at minimum every 165 feet, or at the end of the V-mesh roll or at corners)

Cost of 10-foot wood posts (current standard	$9.92 each
Cost of 12-foot wood posts	$12.00 each

(Note: Stretch panels or line braces using wood posts are not necessary with V-mesh, as V-mesh does not stretch.)

Labor
Labor cost of installation will probably increase 10 to 15 percent.

2. Operational (For example, maintenance, materials, equipment, labor, administrative, programming).

V-Mesh, or V-Net, or V-web fencing would require significantly less maintenance than the current 6”x6” mesh currently in use.

3. Life cycle cost.

Almost none. According to a representative from Steve Regan Co., a V-mesh fence constructed ten years ago still looks strong.

The Utah Division of Wildlife Resources (UDWR) constructed a V-mesh fence in Logan Canyon nearly 50 years ago. It is used for a wildlife barrier for deer, elk, and moose. It is located in an area of high and drifting snowfall. Since its construction, UDWR has not had to do any maintenance on it, and today it still looks as good as new.

G. Benefits. (Provide details that can be used to complete a Cost – Benefit Analysis.) (Estimates are acceptable.) (If no costs, what is the benefit of making this change?)

Benefit will be a reduction in numbers of wildlife accidents on Utah’s highways, and a subsequent reduction in vehicle accidents and wildlife mortality. Also, maintenance cost would be reduced to near nothing.

V-mesh fencing material prevents deer from working the openings in the mesh, saving maintenance time and costs, and helping to prevent wildlife from getting on the right-of-way.

V-mesh fences should reduce the number of wildlife-related accidents by an estimated 98%, as compared to a 90% reduction for current wildlife fences[1].

The table below indicates the animal-vehicle accident severity and costs gathered as part of a University of Utah Study commissioned by UDOT’s Research Section[2]. The cost figures on this table have been updated for this updated report.

The cost figures are based on vehicle damage and injury only. These costs do not include the UDOT expenses for carcass removal ($125.00/mile/year)[3], the estimated value of the animal involved in the accident, nor the delay cost to the traveling public.

Table 1 – Animal-Vehicle Accident Severity and Costs (1992 – 2005)

		Wild		Domestic		
Severity	Cost Per Accident[4]	Number of Accidents[5]	Cost in Millions	Number of Accidents[6]	Cost in Millions	Total Cost in Millions
1	$2,600	28,450	$74.0	4,583	$11.9	$85.9
2	$25,000	945	$23.6	460	$11.5	$35.1
3	$47,000	654	$30.7	399	$18.8	$49.5
4	$230,000	417	$95.9	327	$75.2	$171.1
5	$3,300,000	14	$46.2	21	$69.3	$115.5
	Total	21,932	$466.4	5,790	$186.7	$457.1

Note: The accident severity number corresponds to the following: (1) No Injury; (2) Possible Injury; (3) Bruises and Abrasions; (4) Broken Bones or Bleeding Wounds; and (5) Fatal.

Based on UDOT's Traffic and Safety cost estimates for traffic accidents in the above table, the mean cost of an accident is approximately $121,000. Over a 10-mile stretch of highway, the additional cost of installing V-mesh on both sides of the right-of-way would be approximately $22,000 per mile, or $220.000 over ten miles. Through a stretch of highway having only 10 wildlife related accidents per year, the cost of the accidents would be approximately $1,210,000 per year. That would mean an annual cost-savings of nearly $990,000 per year. According to Traffic and Safety statistics, approximately 1 out of every 1,000 accidents results in a fatality. If that should occur, it would boost the cost of the accidents by an additional $3,300,000.

Using the figures listed above, a benefit/cost ratio can be calculated by multiplying the average annual crash costs times the years of the design life of the V-mesh fence (50 years), then dividing this number by the estimated cost of the fence.

$$\text{Benefit/Cost} = \frac{\text{(Average Annual Crash Cost x Design Life)}}{\text{(Estimated Cost)}}$$

Plugging in the above numbers results in the following:

$$275/1 = \frac{\$1{,}210{,}000 \text{ X } 50)}{(\$220{,}000)}$$

Or a benefit to cost ratio of 275:1.

H. Safety Impacts?

This 8', V-mesh fence would prevent most wildlife from getting on Utah's highways, thus reducing the danger to motorists and wildlife alike.

I. History? Address issues relating to the current usage of the item and past reviews, approvals, and/or disapprovals.

Currently, wild animals trying to cross Utah's highways, are attempting to jump over our 6-foot, Type G wildlife fences and die after become impaled or caught up in the wires and 6" x 6" wire mesh. Many other animals are able to jump the current 6-foot fences, becoming a hazard to motorists. An 8-foot fence would prevent most of these problems, and the V-mesh material would prevent animals from tearing holes in the fence.

A representative from Steve Regan Co., said that fences built of this V-mesh material are still strong after over 10 years of use. Horses and cattle have not been able to knock it over or tear holes in it. Deer, elk, or moose are equally unlikely to knock it over or tear holes in it. The V-mesh material does not stretch which lends strength to pressures from wildlife. Additionally, with 10' T-posts, buried 20 inches, it should be strong enough to prevent damage from snowdrifts as well.

Priority Explanation

Enter the appropriate priority in the box on the first page of the document.

Priority 1 Upon posting, this impacts all projects in construction and design with a Change Order, Addenda, and immediate change to projects being advertised.

Priority 2 Upon posting, this impacts projects being advertised.

Priority 3 Upon posting, the approved standard takes effect **four weeks** later for projects being advertised.

REFERENCES

[1] Bissonette, John. 2007. Personal Communication. Utah State University.

[2] Perrin, Joseph, and Rodrigo Disegni. November, 2003. Animal-Vehicle Accident Analysis. Prepared for Utah Department of Transportation, Research and Development Division, by University of Utah. Report No. UT-03.31.

[3] Leonard, John. June 2007. Personal Communication. Utah Department of Transportation, Traffic and Safety Division. Salt Lake City, Utah.

[4] Ibid.

[5] Utah Department of Transportation, Traffic and Safety Division. June 2007. Unpublished Data. Salt Lake City, Utah.

[6] Ibid.

Supplemental Specification
2005 Standard Specification Book

SECTION 02822M

RIGHT-OF-WAY FENCE AND GATE

Delete Article 1.3 replace with the following:

1.3 REFERENCES

A. AASHTO M 111: Zinc (Hot Dip Galvanized) Coatings on Iron and Steel Products

B. AASHTO M 232: Zinc Coating (Hot-Dip) on Iron and Steel Hardware

C. AASHTO M 279: Zinc Coated (Galvanized) Steel Woven Wire Fence Fabric

D. AASHTO M 280: Zinc-Coated (Galvanized) Steel Barbed Wire

E. ASTM A 39: Zinc Coated Chain-Link Fence Fabric 2

F. ASTM A 116: Metallic-Coated, Steel Woven Wire Fence Fabric

G~~E~~. ASTM A 641: Zinc-Coated (Galvanized) Carbon Steel Wire

H~~F~~. ASTM A 702: Steel Fence Posts and Assemblies, Hot Wrought

~~G.~~ I. ~~G.~~ National Electrical Code (NEC)

Delete Part 2 and replace with the following:

PART 2 PRODUCTS

2.1 WIRE MESH FENCING

A. As specified in AASHTO M 279.

B. Grade 60, nominal 0.099 inch farm grade wire mesh fencing with a 6 inch vertical wire spacing.

C. Class I zinc coating.

2.2 V-MESH FENCING

A. Two 50-inch sections of V-mesh fencing material with doubled and twisted 12½ gauge line wires with 14 gauge V-wires. ASTM A 116.

B Heavy gauge chain-link, galvanized 9-gauge 2 3/8 inch mesh as an alternative. ASTM A 39.

2.3 BARBED WIRE

A. Galvanized barbed wire as specified. AASHTO M 280.

B. Two strands of nominal 0.099 inch diameter wire twisted with a four-point nominal 0.080 inch barbs no more than 5 inches on center.

2.~~3~~4 UNTREATED WOOD POSTS FOR LINES, GATES, ENDS AND CORNERS

A. Native juniper or approved equal.

B. Line posts must have a minimum circumference of 10 inches.

C. Gate, brace, and corner posts much have a minimum circumference of 12 inches.

D. All posts must be sound, free of decay or defects, and structurally suitable.

2.~~4~~5 TREATED WOOD POSTS AND WOOD BRACE RAILS

A. Sound Douglas fir, hemlock, or pine that is free from decay, splits, multiple cracks or any other defect, and structurally suitable.

B. Round or sawed rectangular post and braces.
   1. Round posts must have a minimum diameter of 5 inches.
   2. Gate brace and corner posts must have a minimum diameter of 5 inches.
   3. Rectangular posts must have a minimum dimension of 4 inches x 6 inches.
   4. Square members, a minimum of 4 inches x 4 inches may be rough sawn or S4S.
   5. A line drawn between the centers of the butt and tip of each post and brace rail must be inside of the actual longitudinal centerline of the post or rail within 1.67 percent of its length.
   6. Taper (diameter differential) in round members must not exceed 2 inches in 10 ft.
   7. Fabricate posts and brace rails before pressure treatment of the wood members.
   8. Field drill only after all exposed untreated surfaces of members are field treated with two coats of the same material as they were originally treated.

9. Treat post and brace rail following Section 06055.
10. Keep round posts free of bark, protruding knots, or other irregularities.

2.~~5~~6 METAL POSTS AND BRACES (BRACE POSTS)

A. As Specified. ASTM A 702.

B. Coat fasteners as specified for Class 1 Coating. ASTM A 641.
1. Omit anchor plate only if the post is set in a concrete footing with a minimum cross sectional dimension of 4 inches and a depth equal to full penetration of the post.
2. Galvanized posts may be used in the place of painted posts if the galvanizing is a hot-dipped process that meets requirements as stated in AASHTO M 111.

2.~~6~~7 TUBULAR-STEEL FRAME GATE WITH WIRE FABRIC

A. 1 inch diameter pipe gate frames as specified.

B. Place pipe braces vertically in each drive gate to provide uniform size panels.
1. 10 ft and 12 ft gates must have 1 vertical support.
2. 14 ft and 16 ft gates must have 2 vertical supports.

C. Dimension shown on the plans and in the specifications are the minimum clear openings between gate posts. The supplier must provide a gate with fittings to fill the opening.

D. Use galvanized woven fabric on the mesh wire fences of the same type and quality as specified for the fence and gates.
1. Space horizontal wires corresponding to that of the fence.
2. Provide an adjustable truss rod of 3/8 inch minimum diameter to prevent sagging on gates 10 ft or more in length.

E. Supply hot-dipped galvanized steel fittings as specified. AASHTO M 232.

F. Pintles for 10 ft and wider gates must be 5/8 inches in diameter or larger.

G. Frame and walk gates must be made of 1 inch galvanized steel tubing.

H. Fastener and single gates must be a 18 inch length of galvanized chain secured to the gate at one end and fitted with a snap fastener on the loose end.

I. All double drive gates must have a center latch in place of a chain fastener. A pin from the latch must fit in a socket embedded in concrete.

2.~~7~~8 STAPLES

A. Galvanized No. 9 wire staples at least 1-1/2 inches in length.

2.~~8~~9 ORNAMENTAL FENCE

A. Galvanized fabric for a Class 1 Coating as specified in AASHTO M 279.

B. Galvanized posts, frames and fittings as specified in AASHTO M 232.

C. Fabricate following FG series Standard Drawings.

2.~~9~~10 CONCRETE

A. Class B(AE) concrete. Refer to Section 03055.

B. Contractor may substitute higher class of concrete.

Delete Article 3.2, paragraph K and replace with the following:

K. Install grounds anywhere electric transmission, distribution, or secondary lines cross a wood post fence, conforming to industry standard. (National Electrical Safety Code, Section 9).

Delete Article 3.2, paragraph M and replace with the following:

M. Install ~~ornamental fence~~all fences following FG series Standard Drawings.

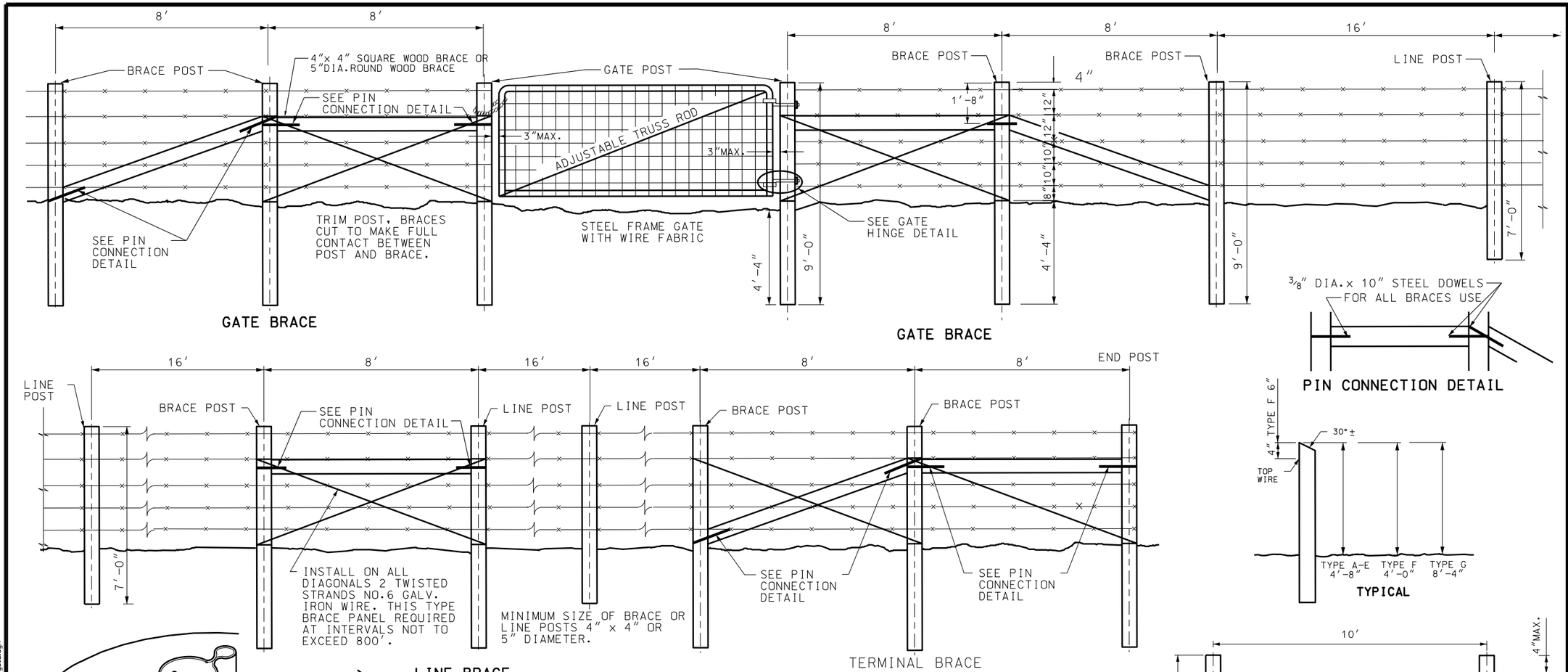

PIN CONNECTION DETAIL

INSTALLATION WITH WOOD POST
(TYPICAL)

TYPICAL

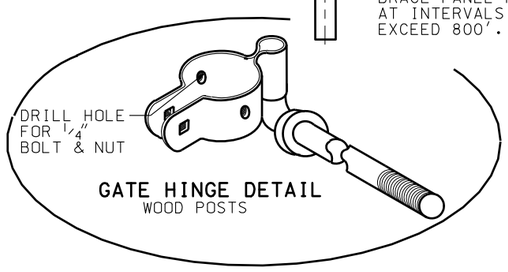

GATE HINGE DETAIL
WOOD POSTS

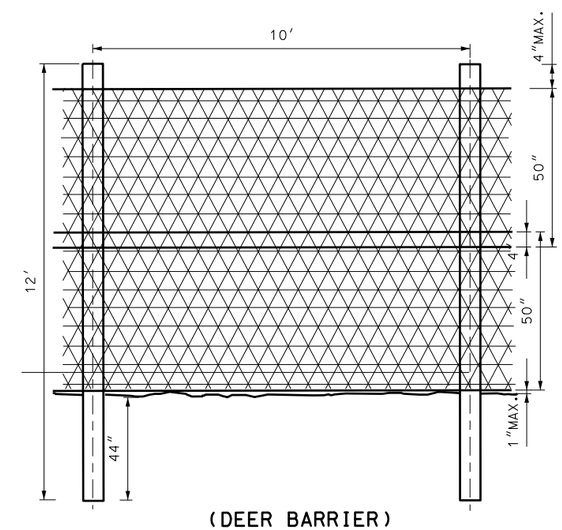

(DEER BARRIER)
RIGHT OF WAY FENCE
TYPE G

TYPE G NOTES.

1. TIE OR CLAMP THE 50 inches TOGETHER EVERY 12 inches USING HOG RINGS OR OTHER TYPES OF TIES OR CLAMPS
2. PLACE BOTTOM WIRE NO MORE THEN 1 inch ABOVE THE GROUND, OR BURY IT AS NEEDED.

POST SIZE, SPACING AND BRACING FOR TYPES A,B,D,E AND F FENCE THE SAME AS SHOWN IN TYPICAL INSTALLATION ABOVE. USE TWO STAYS EVENLY SPACED BETWEEN EACH SET OF POSTS.

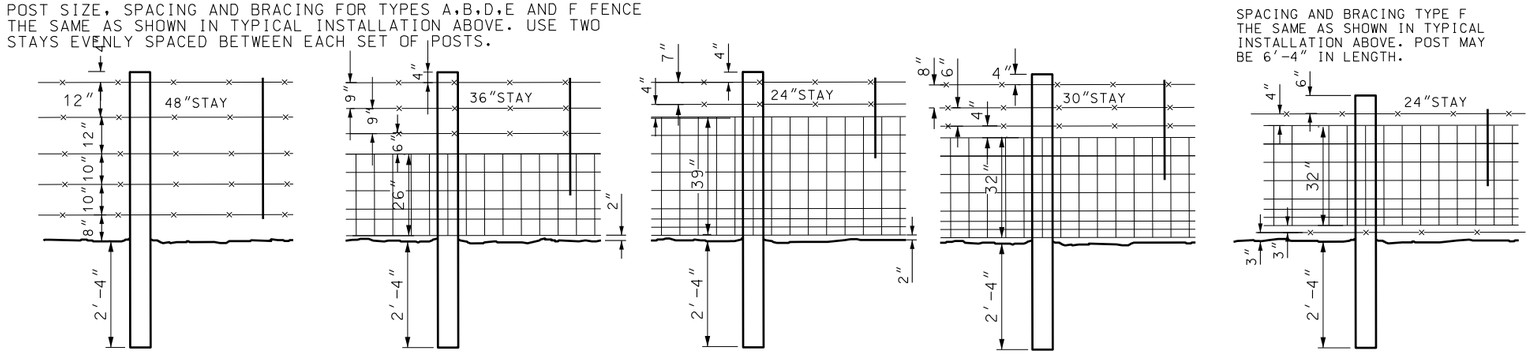

TYPE A
TYPE B
TYPE D
TYPE E

SPACING AND BRACING TYPE F THE SAME AS SHOWN IN TYPICAL INSTALLATION ABOVE. POST MAY BE 6′-4″ IN LENGTH.

TYPE F
TO BE INSTALLED IN DEER COUNTRY

NO.	DATE	APPR.	REVISIONS	REMARKS

UTAH DEPARTMENT OF TRANSPORTATION
STANDARD DRAWINGS FOR ROAD AND BRIDGE CONSTRUCTION

RECOMMENDED FOR APPROVAL — JAN.01,2005 DATE
CHAIRMAN STANDARDS COMMITTEE APPROVED — JAN.01,2005 DATE
DEPUTY DIRECTOR

RIGHT OF WAY
FENCE AND GATES
(WOOD POST)

STANDARD DRAWING TITLE

STD DWG
FG 1A

DGN File:G:\Standards&SpecsSection\Standards Committee\MeetingFiles\2007\Apr\26.07Mtg\Drawings\fg01a.dgn
18-APR-2007

INSTALLATION WITH WOOD POSTS
(TYPICAL.)

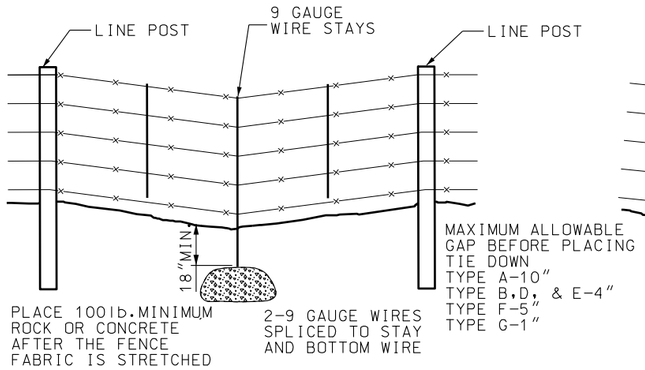

TYPICAL SAG SECTION

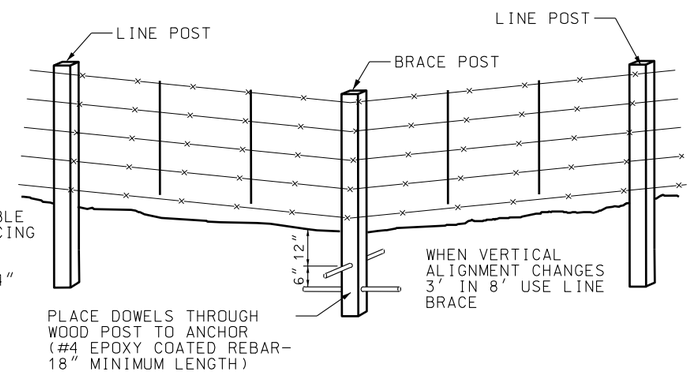

TYPICAL VERTICAL ALIGNMENT CHANGE

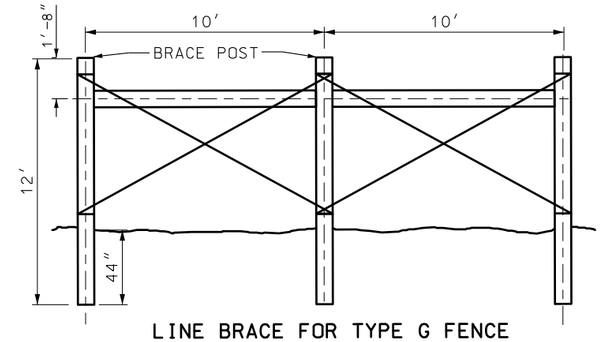

LINE BRACE FOR TYPE G FENCE

BRACE AT INTERVALS NOT EXCEEDING 400'.

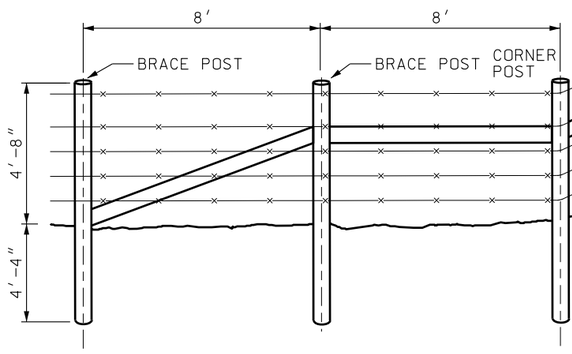

CORNER BRACE

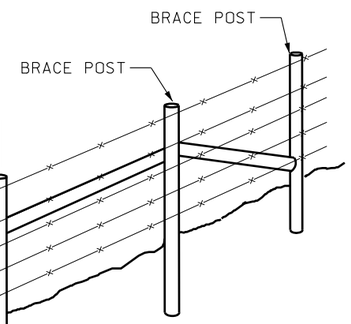

USE CORNER BRACE ON ALL FENCE LINE DEVIATION WHEN WOOD POSTS ARE USED

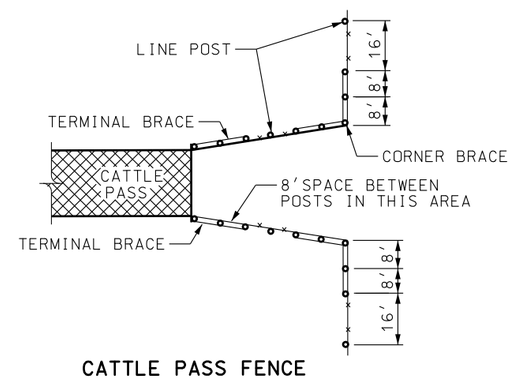

CATTLE PASS FENCE DETAIL

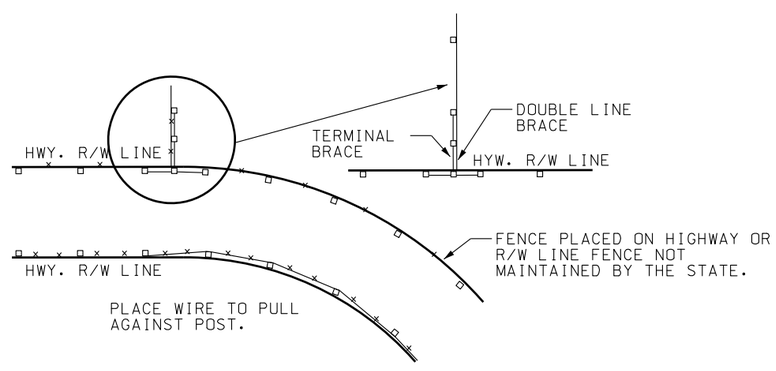

POST & WIRE LOCATION

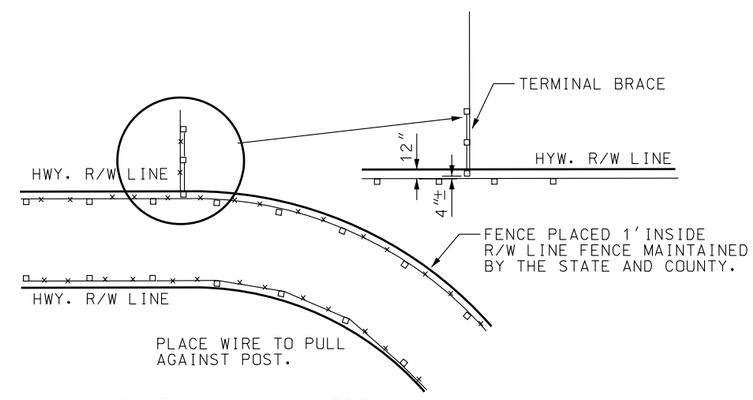

POST & WIRE LOCATION

NO.	DATE	APPR.	REMARKS

REVISIONS

UTAH DEPARTMENT OF TRANSPORTATION
STANDARD DRAWINGS FOR ROAD AND BRIDGE CONSTRUCTION
SALT LAKE CITY, UTAH

RECOMMENDED FOR APPROVAL — JAN.01,2005 DATE
CHAIRMAN STANDARDS COMMITTEE APPROVED — JAN.01,2005 DATE
DEPUTY DIRECTOR

RIGHT OF WAY
FENCE AND GATES
(WOOD POST)

STANDARD DRAWING TITLE

STD DWG
FG 1B

DGN File:G:\Standards&Specs&Section\Standards Committee\MeetingFiles\2007\Apr.126.07Mtg\Drawings\fg01b.dgn
10-APR-2007

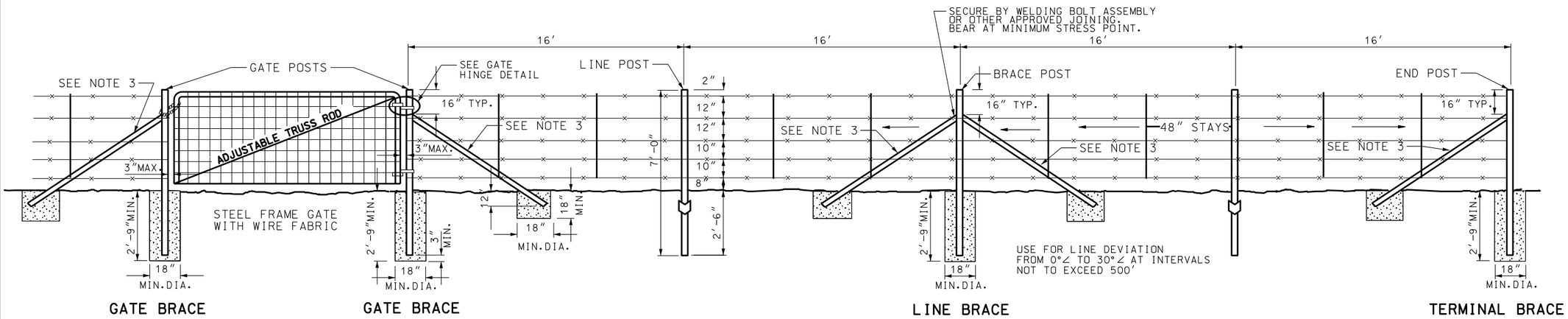

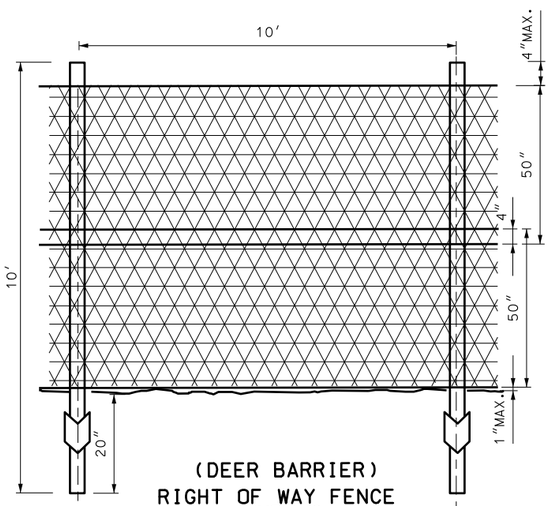

(DEER BARRIER)
RIGHT OF WAY FENCE
TYPE G

TYPE G NOTES.

1. TIE OR CLAMP THE 50 inches TOGETHER EVERY 12 inches USING HOG RINGS OR OTHER TYPES OF TIES OR CLAMPS
2. PLACE BOTTOM WIRE NO MORE THEN 1 inch ABOVE THE GROUND, OR BURY IT AS NEEDED.

INSTALLATION WITH METAL POSTS
(TYPICAL)

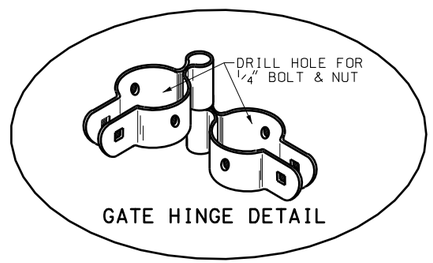

GATE HINGE DETAIL

NOTES:

1. SET METAL POSTS IN CLASS "B" CONCRETE.
2. LINE POSTS FOR TYPE A,B,D,E,F & G FENCE
   A-TEE CHANNELS OR "Y" OR "U" SECTIONS, MINIMUM WEIGHT 1.33 lb/ft. ON LENGTH.
   B-STEEL PIPES,1.900″ OUTSIDE DIAMETER SCHEDULE 40 PIPE, WEIGHT 2.72 lb/ft OF LENGTH OR HIGH TENSILE TRIPLE COATED STEEL PIPE, WEIGHT 2.23 lb/ft OF LENGTH.
   C-ALTERNATE LINE POSTS APPROVED BY THE ENGINEER TO HAVE A MINIMUM RESISTING SECTION MODULUS OF 0.32 cubic inches PERPENDICULAR AND 0.12 cubic inches PARALLEL TO THE FENCE LINE. ANCHOR PLATES TO POSTS, MINIMUM SURFACE AREA OF 20 square inches, MINIMUM 18 GAUGE THICKNESS AND MINIMUM WEIGHT 0.67 lb/EACH
3. BRACE AND CORNER POSTS (ASTM A 36)
   A-BRACE AND CORNER POSTS FOR TYPE A,B,D,E & F FENCES USE 2½″x 2½″x ¼″ ANGLES, MINIMUM WEIGHT 4.10 lb/ft.
   B-BRACES FOR TYPE A,B,D,E& F FENCES, USE 2″x 2″ x ¼″ ANGLES, MINIMUM WEIGHT 3.19 lb/ft.
   C-TYPE G: PIPE FOR CORNER AND BRACE POSTS, USE 2.375″ OUTSIDE DIAMETER, WEIGHT 3.65 lb/ft. OR HIGH TENSILE TRIPLE COATED STEEL, 2.375″ OUTSIDE DIAMETER WEIGHT 3.11 lb/ft.
4. LINE POSTS FOR TYPE A,B,D,E & F FENCE: 7′-0″ LENGTH
   LINE POSTS FOR TYPE G FENCE: 12′-0″
5. TERMINATE MESH AND BARBED WIRE AT EACH CORNER POST.
6. USE CORNER POST BRACES ON ALL FENCE LINE DEVIATIONS GREATER THAN 5.8 feet IN 10 feet. USE CORNER POST BRACES ON TYPE G FENCE WITH DEVIATIONS GREATER THAN 3 feet IN 10 feet.
7. GALVANIZE METAL PER (ASTM A 702) OR PAINTED (ASTM A 123)

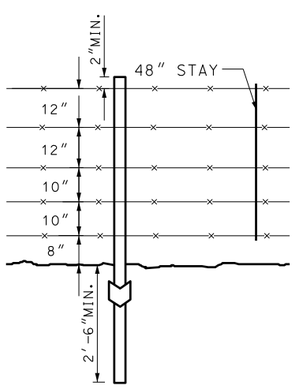

TYPE A

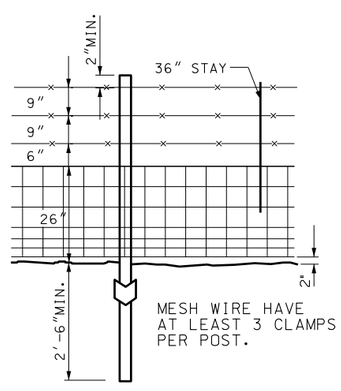

MESH WIRE HAVE AT LEAST 3 CLAMPS PER POST.

TYPE B

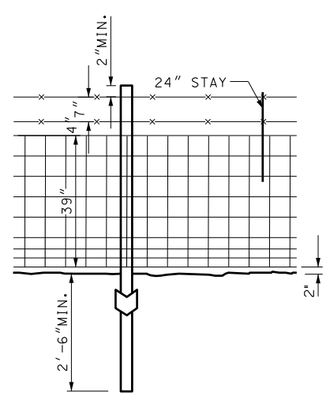

TYPE D

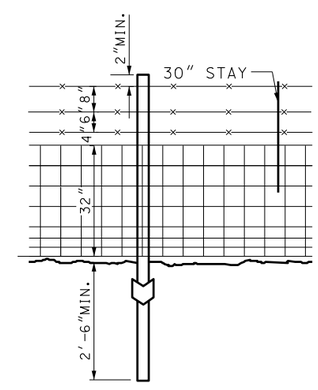

TYPE E

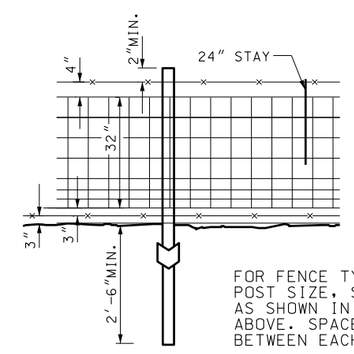

FOR FENCE TYPES A, B, D, E AND F POST SIZE, SPACING AND BRACING ARE AS SHOWN IN TYPICAL INSTALLATION ABOVE. SPACE 2 STAYS EVENLY BETWEEN EACH SET OF POSTS.

TYPE F

TO BE INSTALLED IN DEER COUNTRY

NO.	DATE	APPR.	REVISIONS	REMARKS

UTAH DEPARTMENT OF TRANSPORTATION
STANDARD DRAWINGS FOR ROAD AND BRIDGE CONSTRUCTION
SALT LAKE CITY, UTAH

RECOMMENDED FOR APPROVAL — JAN.01,2005 DATE
CHAIRMAN STANDARDS COMMITTEE — JAN.01,2005 DATE
APPROVED
DEPUTY DIRECTOR

RIGHT OF WAY FENCE AND GATES (METAL POST)
STANDARD DRAWING TITLE

STD DWG
FG 2A

DGN File:D:\StandardsandSpecsSection\Standards Committee\MeetingFiles\2007\Apr12\8.07MsgDrawings\fg02a.dgn
18-APR-2007

INSTALLATION WITH METAL POSTS
(TYPICAL)

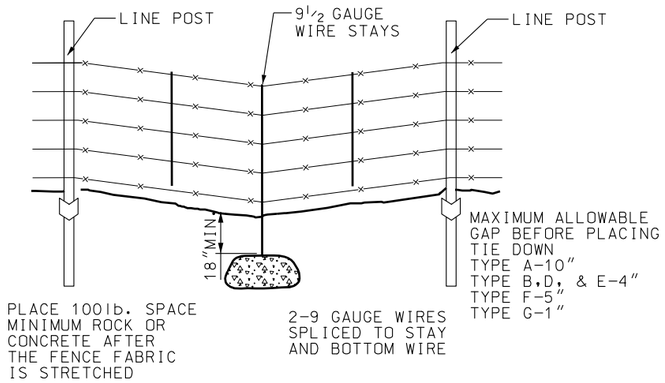

TYPICAL SAG SECTION

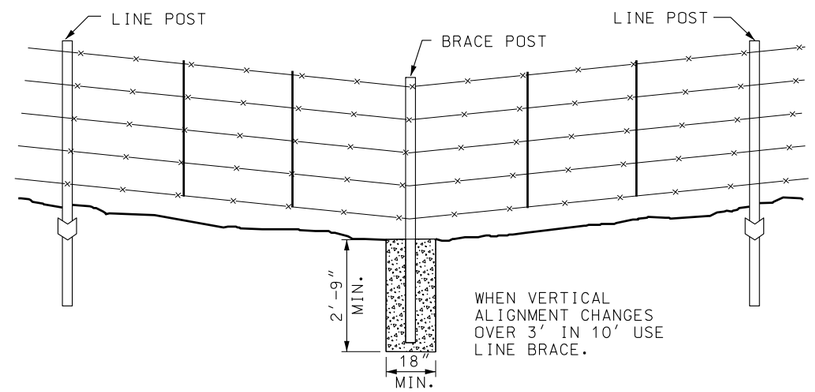

TYPICAL VERTICAL ALIGNMENT CHANGE

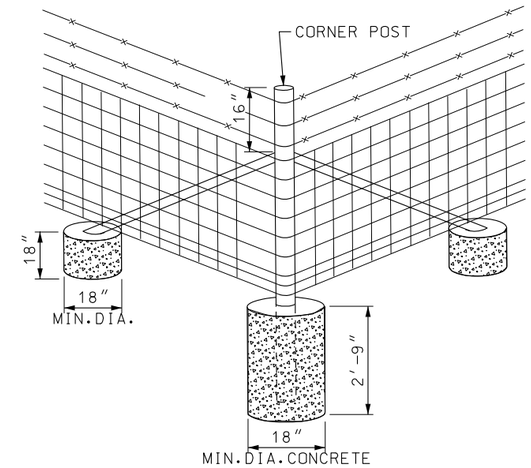

CORNER BRACE
SEE NOTE #6 STD DWG FG 2A

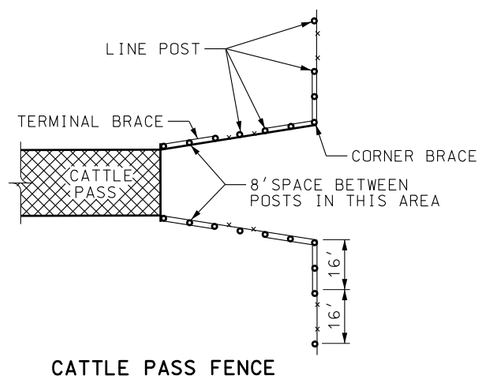

CATTLE PASS FENCE DETAIL

DEER COUNTRY
NOTE: LAP THE 50″ MESH WIRE 4″. TIE OR CLAMP 50″ MESH WIRE TOGETHER, THE SPACING NOT TO EXCEED 2′-0″ SPACING OF CONNECTINGS.

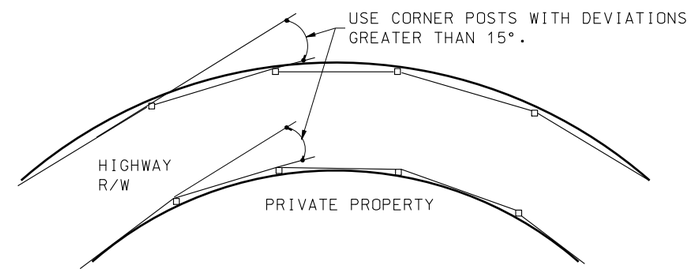

DEER BARRIER ON CURVES
SEE NOTE #6 STD DWG FG 2A

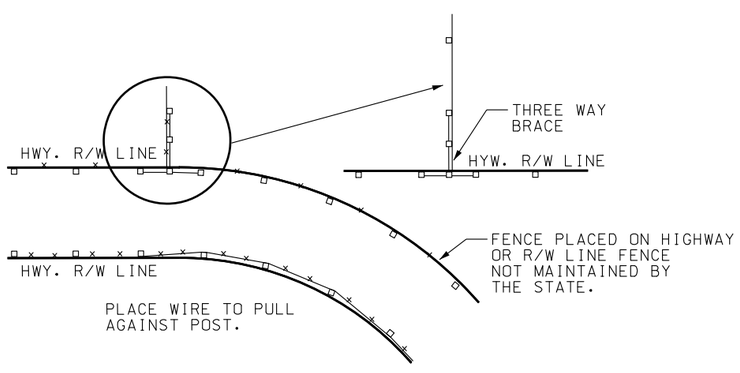

POST & WIRE LOCATION

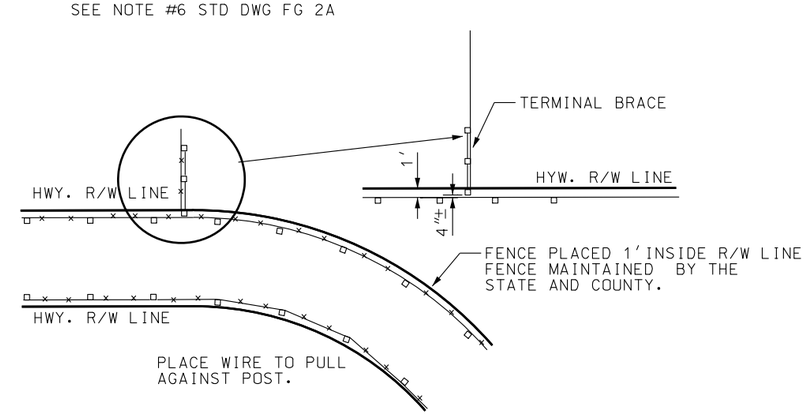

POST & WIRE LOCATION

NO.	DATE	APPR.	REMARKS

REVISIONS

UTAH DEPARTMENT OF TRANSPORTATION
STANDARD DRAWINGS FOR ROAD AND BRIDGE CONSTRUCTION
SALT LAKE CITY, UTAH

RECOMMENDED FOR APPROVAL — JAN.01,2005 DATE
CHAIRMAN STANDARDS COMMITTEE APPROVED — JAN.01,2005 DATE
DEPUTY DIRECTOR

RIGHT OF WAY
FENCE AND GATES
(METAL POST)
STANDARD DRAWING TITLE

STD DWG
FG 2B

DGN Files:Q:\StandardsandSpecsSection\Standards Committee\MeetingFiles\2007\Apr\26.07Mtg\Drawings\fg02b.dgn
10-APR-2007

Standards Committee Submittal Sheet

Name of preparer: Todd Mac Gillvray, and Michael Adams
Title/Position of preparer: Senior Engineer, and ITS Standards Engineer (Sponsor)
Specification/Drawing/Item Title: ATMS Standard Specifications and Drawings
Specification/Drawing Number: 13551, 13552, 13555, 13556, new 13558, new 13559, &13594 AT 1 through AT 13 (new AT 10A and 10B replacing AT 10; new AT 13)

Enter appropriate priority level:
(See last page for explanation) **4**

Sheet not required on editorial or minor changes to standards. Check with Standards Section.

NOTES:

1. All Submittal Sheets must be completed and sent to the Standards and Specifications Section by the Standards Committee suspense date as shown on the Web. (http://www.udot.utah.gov/index.php/m=c/tid=303)
2. The Preparer of the Submittal Sheet or the Standards Committee member (or authorized substitute) responsible for the submittal must be present at the Standards Committee meeting and capable of discussing and answering all questions related to the submittal. The item will be postponed to a later meeting if one of these people is not present.
3. Notify the Standards and Specifications Section immediately of any changes that impact the presentation to include absence of sponsor or delay in presentation.

Complete the following: (Use additional pages as needed.)

A. Why? Detail the reason for changing the Standard (Specification or Drawing), what has initiated a new Standard, or what has caused a new or changed item of interest.

The proposed changes are a result of a review for purposes of updating some of the existing ATMS Specifications and Drawings, and introducing new ones. Some of the major changes are described below. See the attached comment logs for more comprehensive information.

13551 General ATMS Requirements- Changed the submittal requirements regarding as-builts. Final Inspection cannot be held until initial as-built drawings are submitted. Region Blue Stakes Coordinator required to be present at Final Inspection. Contractor is now required to notify the Region when ATMS items are installed. Also, the number and type of as-built copies are specified. A Department certified detector loop splicer is now required for detector loop work. Increased the depth of foundation removal from 6 inches to 2 ft.

13552 Ramp Meter Signals and Signing– Changed advanced warning from using flashers to using blankout sign and added names for custom signs. Modified verbiage for foundation work.

13555 ATMS Cabinet- Added pole-mounted cabinet specifications and distinguished between this and pad-mounted cabinets.

13556 Closed Circuit Television Assembly- Added in option for the use of camera lowering poles, identified where CCTVs can be mounted, distinguished between positioner and dome camera assemblies, defined the camera lowering system, added video and data surge suppression, modified verbiage for foundation work, updated CCTV pole installation instructions for the camera lowering system, deleted the wood pole as a CCTV option, and moved pole-mounted cabinet information to 13555.

13558 Highway Advisory Radio (HAR) Preparation– This new spec is introduced to have a Contractor prepare a site for the installation of a State Furnished HAR system. Pole cannot be metallic due to radio interference. For now, a treated wood pole will be the standard for mounting the devices. Due to the extra cost and lack of detailed information, a fiberglass pole will not be specified at this time and was removed. Since the HAR vendor provides an operational system, the Contractor will not be responsible for it working and will only need to test the cables and conductors they install.

13559 Non-Intrusive Detector (NID) System – This new spec is introduced to give the Contractor guidance on where and how to mount a NID, including when additional surge protection is needed. NID vendor changed the 40 ft spacing required by the installation guide, to 100 ft per current practice. He (Steve O'Connor) has said that doing so will not void the system warranty.

13594 Fiber Optic Communication– Added more specific requirements for the labeling of fiber optic cables that can be accessed in buildings or boxes. Also, made ST Connectors the standard to save money on fiber termination work; LC Connectors can be used only where approved. Provided a specific length for fan-out kits so enough length is available to connect to cabinet equipment. Deleted two previous splice enclosure requirements to open up the use for more kinds of enclosures. Specified a minimum amount of lubricant to be used for pulling fiber optic cable. Changed the slack requirements in boxes to better allow for future projects and required stated that the Department will not pay for additional slack above the minimum. Deleted the repairing of damaged fiber strands since the Department does not want to pay for repairing fiber. Updated the submittal media of testing documentation from floppy.

AT 1 – Added more abbreviations based on items found on other AT sheets.

AT 2 to AT 5 – At Mark Taylor's direction and consensus to respond to the requirement for , updated drawings to use 3 section signal heads for each lane. Changed the supplemental advanced warning sign to a "Meter On" blankout sign. Named the custom signs. Delineated when to use a 2 or 3 section lower signal head based on vehicle output.

AT 6 – Added Table 2 refs to all details and modified note 2 to detail how much OGSC can be used for the HMA.

AT 7 – Specified the desired penetration of HDPE and PVC conduit, clarified the limits of flowable fill use in the third dimension, reworded the expansion joint verbiage to match a specific material from the Concrete Joint Control spec, and changed the collar from 8 inches to 6 inches thick.

AT 8 – Provided 2 ft from box lids to cabinet foundations and added requirement to compact under concrete.

AT 9 – Specified the framing struts we want to use and added galvanizing to many callouts.

AT 10 now 10A – Revised mounting instructions on details, identified the vendor name matching the wiring diagrams, added video and data surge protection per the spec changes, and changed the AC wire gauge sizes from the cabinets to the CCTV.

AT 10B—This new drawing is to show the Contractor the required DIP switch settings for the Department furnished cameras. Not enough space on AT 10, so AT 10A and 10B were created.

AT 11 – Added a camera lowering pole and requirements consistent with the new agency contract, pole mounted cabinets, and showed some of the available CCTV and NID mounting locations.

AT 12 – Added foundation table to capture the various structural requirements of the new pole sizes and based on their AASHTO loadings.

AT 13 – New HAR pole detail showing Contractor work only. Vendor to come in after and hang equipment based on Department ordered agency contract work.

B. How is Measurement and Payment handled? Existing (from the measurement and payment document), modified, or new measurement and payment to be included with all Standard Specifications or Supplemental Specifications.

The table below identifies Measurement and Payment items that include standards changed with this submittal and the February 22, 2007 submittal. This is the comprehensive M&P promised in the February 22, 2007 meeting.

Section 13553: ATMS Conduit

#	135530010	ATMS Conduit	Feet
A. Includes all materials, labor, workmanship, equipment, documentation, and incidental items required for a complete system of conduit as described in the contract. Unless otherwise specified, conduit may be installed by trenching, boring, or plowing. B. Includes duct seal, pull tape, conduit sweeps, fittings, conduit proofing, backfill, and warning tape. C. Includes flowable fill.			

#	135530020	1-2” Conduit	Feet
A. Includes all materials, labor, workmanship, equipment, documentation, and incidental items required for 1-2” conduit as described in the contract. Unless otherwise specified, conduit may be installed by trenching, boring, or plowing. B. Includes duct seal, pull tape, conduit sweeps, fittings, conduit proofing, backfill, and warning tape. C. Includes flowable fill.			

#	135530030	2-2” Conduit	Feet
A. Includes all materials, labor, workmanship, equipment, documentation, and incidental items required for 2-2” conduits as described in the contract. Unless otherwise specified, conduit may be installed by trenching, boring, or plowing. B. Includes duct seal, pull tape, conduit sweeps, fittings, conduit proofing, backfill, and warning tape. C. Includes flowable fill.			

#	135530040	1-3” Conduit	Feet
A. Includes all materials, labor, workmanship, equipment, documentation, and incidental items required for 1-3” conduit as described in the contract. Unless otherwise specified, conduit may be installed by trenching, boring, or plowing. B. Includes duct seal, pull tape, conduit sweeps, fittings, conduit proofing, backfill, and warning tape. C. Includes flowable fill.			

#	135530050	2-3” Conduit	Feet
A. Includes all materials, labor, workmanship, equipment, documentation, and incidental items required for 2-3” conduits as described in the contract. Unless otherwise specified, conduit may be installed by trenching, boring, or plowing. B. Includes duct seal, pull tape, conduit sweeps, fittings, conduit proofing, backfill, and warning tape. C. Includes flowable fill.			

#	135530060	1D Conduit	Feet
A. Includes all materials, labor, workmanship, equipment, documentation, and incidental items required for 1D conduit as described in the contract. Unless otherwise specified, conduit may be installed by trenching, boring, or plowing. B. Includes duct seal, pull tape, conduit sweeps, fittings, conduit proofing, backfill, and warning tape. C. Includes flowable fill.			

#	135530070	2D Conduit	Feet
A. Includes all materials, labor, workmanship, equipment, documentation, and incidental items required for 2D conduit as described in the contract. Unless otherwise specified, conduit may be installed by trenching, boring, or plowing. B. Includes duct seal, pull tape, conduit sweeps, fittings, conduit proofing, backfill, and warning tape. C. Includes flowable fill.			

#	135530080	4D Conduit	Feet
A. Includes all materials, labor, workmanship, equipment, documentation, and incidental items required for 4D conduit as described in the contract. Unless otherwise specified, conduit may be installed by trenching, boring, or plowing. B. Includes duct seal, pull tape, conduit sweeps, fittings, conduit proofing, backfill, and warning tape. C. Includes flowable fill.			

#	135530090	2” Rigid Metal Conduit	Feet
A. Includes all materials, labor, workmanship, equipment, documentation, and incidental items required for installing rigid metal conduit as described in the contract. B. Includes pull tape, conduit sweeps, fittings, galvanized steel clamps, bolts, channels, rods, clips, brackets, nuts, and washers required to secure conduit to existing structures. C. Includes flowable fill.			

#	135530100	Utility Coordination and Location	Lump Sum
Includes coordination with Blue Stakes to locate and mark existing utilities and any potholing necessary to confirm their location. Includes coordination with all utility owners.			

Section 13554: Polymer Concrete Junction Box

#	135540010	Polymer Concrete Junction Box	Each
In Place. Includes backfill, flowable fill, maintenance markers, conduit plugs, grounding materials, concrete collar, bolts, flowable fill, expansion joint material, grout, and a locate ball or disk.			

#	135540020	Polymer Concrete Junction Box, Type I	Each
In Place. Includes backfill, flowable fill, maintenance markers, conduit plugs, grounding materials, concrete collar, bolts, flowable fill, expansion joint material, grout, and a locate ball or disk.			

#	135540030	Polymer Concrete Junction Box, Type II	Each
In Place. Includes backfill, flowable fill, maintenance markers, conduit plugs, grounding materials, concrete collar, bolts, flowable fill, expansion joint material, grout, and a locate ball or disk.			

#	135540040	Polymer Concrete Junction Box, Type III	Each
In Place. Includes backfill, flowable fill, maintenance markers, conduit plugs, grounding materials, concrete collar, bolts, flowable fill, expansion joint material, grout, and a locate ball or disk.			

Section 13555: ATMS Cabinet

#	135550010	Pad-Mounted ATMS Cabinet	Each
Includes all materials, equipment, labor, and incidental items required for installation of a complete and functional State-Furnished ATMS Cabinet. Includes foundation, associated conduit, and supplemental disconnect and frame. Includes all survey work required for the site.			

#	135550020	Pole-Mounted ATMS Cabinet	Each
Includes all materials, equipment, labor, and incidental items required for installation of a complete and functional State-Furnished ATMS Cabinet. Includes pole attachment materials and supplemental disconnect and frame.			

Section 13556: Closed Circuit Television (CCTV) Assembly

#	135560010	45’ Camera Lowering CCTV Pole	Each
Includes all labor, equipment, and materials necessary to provide a CCTV pole with a fully functional camera lowering system where specified in the contract. Includes pickup of state furnished materials, loading, unloading, transportation, and storage. Includes foundation, steel reinforcement, anchor bolt templates, conduit, and grounding materials.			

#	135560020	60’ Camera Lowering CCTV Pole	Each
Includes all labor, equipment, and materials necessary to provide a Closed Circuit Television (CCTV) pole with a fully functional camera lowering system where specified in the contract. Includes pickup of state furnished materials, loading, unloading, transportation, and storage. Includes foundation, steel reinforcement, anchor bolt templates, conduit, and grounding materials.			

#	135560030	80’ Camera Lowering CCTV Pole	Each
Includes all labor, equipment, and materials necessary to provide a Closed Circuit Television (CCTV) pole with a fully functional camera lowering system where specified in the contract. Includes pickup of state furnished materials, loading, unloading, transportation, and storage. Includes foundation, steel reinforcement, anchor bolt templates, conduit, and grounding materials.			

#	135560040	45’ Non-Lowering CCTV Pole	Each
Includes all labor, equipment, and materials necessary to provide a Closed Circuit Television (CCTV) pole where specified in the contract. Includes pickup of state furnished materials, loading, unloading, transportation, and storage. Includes foundation, steel reinforcement, anchor bolt templates, conduit, and grounding materials.			

#	135560050	Domed CCTV System	Each
Includes all labor, equipment, materials, testing, documentation, and incidental items necessary to provide a fully operational Closed Circuit Television (CCTV) Assembly System. Includes pickup of state furnished materials, loading, unloading, transportation, and storage. Includes mounting equipment, data and video surge suppression, and CCTV Composite Cable.			

#	135560060	Positioner CCTV System	Each
Includes all labor, equipment, materials, testing, documentation, and incidental items necessary to provide a fully operational Closed Circuit Television (CCTV) Assembly System. Includes pickup of state furnished materials, loading, unloading, transportation, and storage. Includes mounting equipment, data and video surge suppression, and CCTV Composite Cable.			

Section 13557: Variable Message Sign

#	135570010	Variable Message Sign Installation	Each
Includes all labor, equipment, materials, and incidental items necessary to install and test a State-Furnished Variable Message Sign. Includes multi-fiber optic cable and fiber connectors to connect the VMS controller to the Sign.			

Section 13558: Highway Advisory Radio (HAR) Preparation

#	135960010	HAR Site Preparation	Each
Includes all labor, equipment, workmanship, and materials necessary to prepare the HAR site for the installation of State-Furnished equipment by others. Includes materials and installation of HAR pole and rigid metal conduit.			

Section 13559: Non-Intrusive Detector (NID) System

#	135590010	Non-Intrusive Detector (NID) System	Each
Includes all labor, equipment, and materials necessary to install and test a State-Furnished NID System.			

Section 13561: ATMS Power Service

#	135610010	ATMS Power Service	Lump
Includes all materials and workmanship to provide electrical service to ATMS devices. Includes all coordination with the power service provider, wiring, surge protection, rigid metal riser, weatherhead, transformer, disconnects, conduit risers and stand-off brackets, breakers, clamps, conduit, junction boxes, grounding materials, duct seal, pull wire, labor, workmanship, equipment, testing, documentation, and incidental items required for a fully operational system.			

Section 13591: Traffic Monitoring Detector Loop

#	135910010	Traffic Monitoring Detector Loop	Each
Includes all labor, equipment, and materials to provide, install, and test detector preformed loops and detector cable. Includes connection of detector loops to ATMS cabinet.			

Section 13592: Roadway Weather Information System/Environmental Sensor Station (RWIS-ESS)

#	135920010	RWIS-ESS Site Preparation	Each
Includes all labor, equipment, and materials necessary to prepare the RWIS site for the installation of State-Furnished equipment. Includes materials and installation of buried conduit, polymer concrete junction boxes with ground rods, tower foundation, gate, and fence.			

Section 13593: Weigh-In-Motion

#	135930010	Weigh-In-Motion System	Lump Sum
Includes all labor, equipment, and materials necessary to provide a fully operational Weigh-In-Motion System.			

Section 13594: Fiber Optic Communication

#	135940010	6 Strand SMFO Cable	Feet
Includes all labor, equipment, materials, labeling, and testing necessary to provide a fully operational system.			

#	135940020	12 Strand SMFO Cable	Feet
Includes all labor, equipment, materials, labeling, and testing necessary to provide a fully operational system.			

#	135940030	24 Strand SMFO Cable	Feet
Includes all labor, equipment, materials, labeling, and testing necessary to provide a fully operational system.			

#	135940040	36 Strand SMFO Cable	Feet
Includes all labor, equipment, materials, labeling, and testing necessary to provide a fully operational system.			

#	135940050	48 Strand SMFO Cable	Feet
Includes all labor, equipment, materials, labeling, and testing necessary to provide a fully operational system.			

#	135940060	72 Strand SMFO Cable	Feet
Includes all labor, equipment, materials, labeling, and testing necessary to provide a fully operational system.			

#	135940070	144 Strand SMFO Cable	Feet
Includes all labor, equipment, materials, labeling, and testing necessary to provide a fully operational system.			

#	135940080	288 Strand SMFO Cable	Feet
Includes all labor, equipment, materials, labeling, and testing necessary to provide a fully operational system.			

#	135940090	Fusion Splice	Each
Includes all fusion splicing as specified in the contract. Includes all labor, coordination, materials, equipment, testing, documentation, labeling, workmanship, and incidental items necessary for a fully operational system. Includes all testing.			

#	**135940100**	**Type A Splice Enclosure**	**Each**
Furnish and Install			

#	**135940110**	**Type B Splice Enclosure**	**Each**
Furnish and Install			

#	**135940120**	**6 SMFO Drop Cable Termination**	**Each**
Includes Connectors and 6 Strand Fan-out Kit			

C. Stakeholder Notification for AGC and ACEC:

By email provide the AGC and ACEC Standards Committee member a copy of all pertinent information relating to the specification or drawing. Detail all responses below. Indicate if no comments were received.

Note: There is a two-week response time set for this item.

Refer to the Standards Committee Web site, Members page at http://www.udot.utah.gov/index.php/m=c/tid=659 for the respective e-mail addresses.

AGC Comments: (Use as much space as necessary.)

Proposed changes to specs and drawings were sent July 25, 2007 for review and comment. No comments were received from Mont Wilson as of August 8, 2007.

ACEC Comments: (Use as much space as necessary.)

Comments were received from Tyler Yorgason and Karl Verhaeren on behalf of ACEC. See comment logs.

D. Stakeholders? From the list provided, document the stakeholders contacted, detailing: the company, name of contact, how contacted (by phone, email, hard copy, or in person), concerns, and comments of the change. Stakeholders:

Note: There is a two-week response time set for this item. Allow Stakeholders two weeks to process and respond to coordination requests. All areas should try to complete review and comment as soon as possible but within two weeks.

In-house (for example, preconstruction, materials, construction, safety, design, maintenance) (Include all applicable in-house areas even if not listed above.)
Michael Adams; email and in person as part of Traffic Management Division (TMD); see comment logs
Brad Cameron; in person as part of TMD; see comment logs
Lynne Yocom; in person as part of TMD; see comment logs
Tam Southwick; in person as part of TMD; see comment logs
Matthew Smith; in person as part of TMD; see comment logs
Mark Taylor; in person as part of TMD; see comment logs
Bryan Chamberlain; in person as part of TMD; see comment logs
Bill Butterfield; email and in person as part of TMD; see comment logs
Mike Xiras; in person as part of TMD; see comment logs
Robert Miles; email and phone; Project Development; see comment logs
Jason Richins; email and phone; Structures; see comment logs
Boyd Wheeler; in person; Structures; see comment logs
Degen Lewis; in person; Materials; see comment logs
Glenn Blackwelder; in person as part of TMD; see comment logs
Larry Montoya; phone; Traffic & Safety; see comment logs
John Leonard; email; Traffic & Safety; see comment logs
Grant Jackson; email; Region 3; see comment logs

The following remaining UDOT staff were contacted July 25, 2007 by email for review comments and none were received: Betty Purdie; Dennis Simper; Hugh Kirkham; John Butterfield; Jim McConnell; Robert Dowell; Rodney Terry; Rex Harris; Robert Westover; Rob Wight; James Cox; Bill Lawrence; Brent Schvaneveldt; Kevin Griffin; Larry Gay

Follow-up calls were made to all people that were emailed to capture final comments.

Construction Engineers

Contractors (Any additional contacts beyond "C" above.)
FiberTel; Todd Fisher; email; no concerns or comments regarding the changes
Hidden Peak; Dereke Lee; email; no concerns or comments regarding the changes
American Fork City; Brad Smith; email; no concerns or comments regarding the changes

Suppliers
Steve O'Connor; Western Signal

Consultants (as required) (Any additional contacts beyond "C" above.)
TransCore; Aaron Cloward; see comment logs
TransCore; Dwayne Fontaine; see comment logs
TransCore; Todd Mac Gillvray; see comment logs
TransCore; Aaron Buchanan; see comment logs
TransCore; Jonathan Turner; see comment logs
TransCore Inspector; Gerard Kies; see comment logs

FHWA (To be accomplished as part of the two-week process before submitting to the Standards and Specifications Section for inclusion on the Standards Committee agenda.) (This is in addition to the requirements of UDOT Policy 08A5-1, procedure 08A5-1.3.)
Anthony Sarhan (FHWA) was contacted and Roland Stanger (FHWA) submitted comments through and with John Leonard (UDOT); see comment logs

Others (as appropriate)

E. Other impacted areas, systems, or personnel. (Consider all impacts and possible changes to these areas during the preparation process. Coordinate with all appropriate areas for the respective item. List all impacts and action taken.)

1. Minimum Sampling and Testing Guide (MS&T Guide)
Not applicable at this time.

2. Business Systems (Electronic Bid System, Project Development Business System, Electronic Program Management, Computer-Aided Drafting and Design, etc.)
Please update PDBS with items from section B above.

3. Implementation Plan (Provide detailed instructions on how the subject item will be implemented to include notification of all interested parties and training requirements.)
The plan is to use these specs and standards on current ITS projects until they are fully approved by committee. Contractors have been made aware of new specs/standards and the intent is to have them approved in time for the 2008 Spec Book. Priority level 4 is adequate for all submitted items.

Training for the Camera Lowering system installation is upcoming within the next two months. Contractors, Consultants, and UDOT will be invited to attend.

Training will be required for detector loop work through Bob Gibby, but all other changes made are self-explanatory. IMSA Level 2 training taught by Bob Strong provides an additional forum to discuss current UDOT standards and answer questions. Further, Michael Adams the ITS Standards Engineer can field questions.

F. Costs? (Estimates are acceptable.)

1. Additional costs to average bid item price.
Not applicable since there are no ITS/ATMS bid items generating a history yet. However, the changes can expect to do the following relative to the way this work is done currently:

13551 – Contractors are now forced to prepare as-builts per 01721 and submit before Final Inspection, meaning an unknown increased cost for ATMS location activities.

13552 – The new blankout sign replace the flashers and supplemental custom sign, so there is no change in cost anticipated with this. There is an increased cost in going from 2 section heads to 3 section heads by one-third. The yellow ball LED and module is about $100 each. Based on the ramp configuration, the changes would add $100 to a single lane ramp with one vehicle output, $200 to a single lane ramp with two vehicle output, $400 to a dual lane ramp with single vehicle output, $600 to a dual lane ramp with two vehicle output, and $700 to a three lane ramp with two vehicle output.

2. Operational (For example, maintenance, materials, equipment, labor, administrative, programming).
As more corridors use the camera lowering poles, maintenance will be able to use any truck to maintain the cameras—lessening the impact to traffic.

3. Life cycle cost.
No impact anticipated.

G. Benefits? (Provide details that can be used to complete a Cost – Benefit Analysis.) (Estimates are acceptable.) (If no costs, what is the benefit of making this change?)
The benefits to making the changes in 13551 and 13552 above and the rest are as follows:

13551 – The Department gets accurate as-builts to identify ATMS assets and better protect them. Fewer damages, need for fixes, and less downtime should result.

13552, AT 2-5 – The Department begins to move toward enhanced safety and compliance with federal regulations relative to ramp metering.

13555, AT 8 – A larger apron area around the cabinet, with a reduced thickness shows the Department will be saving 14.47 – 14.23 = 0.24 yd^3 concrete @ $350/yd^3 giving $83 per pad-mounted ATMS cabinet site.

13556, AT 11-12 – By using taller camera lowering poles, the CCTV spacing can increase from ½ mile separation for the 45 ft, to 1 mile for the 80 ft. For a five mile corridor this gives the following total site ATMS expenditure:

6 x $47K/site = $282K

11 x $35K/site = $385 K
Difference = $103K/ 5 miles = $20.6K/mile savings assuming sites at both ends of corridor

13558, AT 13 – New, no change.
13559 – New, no change.
13594 – An additional 65 ft of fiber optic cable slack in all Type II boxes will increase costs at $2.50/ft of 72 SMFO for $163 per site. But, due to the large size of the Type II boxes and their ability to store 80 ft with an enclosure, it is likely that the Type III boxes will be used less which would save about $250 per design changout.

Many of the spec changes were to help clarify the standards, remove redundancies, incorporate repetitive special provision passages that are more general in nature, reduce change order requests, allow greater design flexibility, allow greater construction flexibility, meet the needs of traffic growth, and reduce contract duration.

H. Safety Impacts?
AT 2-5 may have some in moving from two to three-section heads. Also, camera lowering poles will reduce the likelihood of having to deploy temporary traffic control and will allow maintenance to do their work on the ground and not in the air. Adding space between the junction boxes and the cabinet in AT 8 will help maintenance do work in the cabinet without having to lean over an open box—greater fall protection.

I. History? Address issues relating to the current usage of the item and past reviews, approvals, and/or disapprovals.
These items have all been reviewed by the TMD group (listed previously) at least once. These new specs have not yet been used on a project, but will be used as specials on the TMS Phase II project underway on I-15 in Utah County. The CCTV spec, in large part, will be used on the Weber Canyon Project in Region 1. Previously approved 2005 Supplementals with the same spec number should be replaced by these. Their information has been incorporated and modified as part of this review.

FHWA has expressed the need to assist in the ongoing development of AT 2-5 and 13552 as more information regarding ramp meter policy is determined. These can expect to change in the coming weeks and months, but the changes to date make significant and important progress.

Priority Explanation

Enter the appropriate priority in the box on the first page of the document.

Priority 1	Upon posting, this impacts all projects in construction and design with a Change Order, Addenda, and immediate change to projects being advertised.
Priority 2	Upon posting, this impacts projects being advertised.
Priority 3	Upon posting, the approved standard takes effect **four weeks** later for projects being advertised.
Priority 4	Takes effect January 1, 2008 and is published with the new spec book.

General ATMS, Ramp Meter, Cabinet, CCTV, new HAR, new NID, and Fiber Optic Communication Spec Comment Resolution Log

UDOT, FHWA, Suppliers
JL = John Leonard
RS = Roland Stanger (FHWA)
Robert Miles
Mark Taylor
TMD = ITS Standards Group, see note
Jason Richins
Boyd Wheeler
Karl Verhaeren (ACEC-Consultant)
Degen Lewis
Steve O'Connor

TransCore
Dwayne Fontaine
Aaron Cloward
Todd Mac Gillvray
Gerard Kies
Aaron Buchanan
Jonathan Turner

Specs Reviewed
13551, 13552, 13555, 13556, new 13558, new 13559, and 13594

Response Code Legend
A - Add or Correct
B - Clarify or Evaluate
C - Additional Information Needed
D - Not Cost Effective / Preference
E - Disagree
F - Delete Comment

ID #	Sheet #	Comment made by:	Comment Date	Comment	Response Code	Response
1	**13551**			**General ATMS Requirements**		
2	Title	Todd M	4/30/2007	Removed Supplemental Specification 2005 Sepcification Book from title	A	Comment Incorporated
3	1.3.A	Todd M	7/23/2007	Removed (nuts washers and anchor bolts)	A	Comment Incorporated
4	1.3	Todd M	5/8/2007	Add Section B: AASHTO M 314: Standard Specification for Anchor Bolts, Steel, 36, 55, and 105-ksi Yield Strength	A	Comment Incorporated
5	1.3	Boyd W / Degen	5/8/2007	Add Section E: ASTM F 1554: Standard Specification for Anchor Bolts, Steel, 36, 55, and 105-ksi Yield Strength	A	Comment Incorporated
6	1.4 D	Todd M	5/8/2007	Changed Road to Roadway	A	Comment Incorporated
7	1.5 B	Todd M	4/30/2007	Inserted (at time of bid) to specify UDOTs latest test procedures	A	Comment Incorporated
8	Table 1	Lynne Y	7/23/2007	Added "Hold Final Inspection after initial drawings are submitted. Notify and have Region Blue Stakes Coordinator present at Final Inspection."	A	Comment Incorporated
9	1.5	Lynne Y	8/3/2007	Add the requirement to submit five hard copies and one electronic copy of the as-builts to the Engineer.	A	Comment Incorporated
10	2.1.F	Aaron C	8/3/2007	Replace F with Detector Loop: Department certified loop splicer required.	A	Comment Incorporated
11	3.1.C.1	Todd M	4/30/2007	Added (at time of bid) to specify Conductor Test Form	A	Comment Incorporated
12	3.3	Lynne Y	8/3/2007	Add the requirement to notify region permits officer and blue stakes coordinator when ATMS element are installed.	A	Comment Incorporated
13	3.5.B	Jason R	7/31/2007	3.5.B after ASTM F 1554 please add "Grade 55"	A	Comment Incorporated
14	3.5.B	Todd M	5/8/2007	Replaced AASHTO M 314 with STM F 1554	A	Comment Incorporated
15	3.5.C	Jason R	7/31/2007	3.5.C, most of 5.17 of the AASHTO standard is just for the designer. It references M 314 and we want to use ASTM F 1554, Grade 55 instead. The only two things I see that relate to the contractor are "Anchor bolts shall be installed with misalignments of less than 1:40 from vertical." and "Grout, when specified under base plates, should be nonshrink and should not contain any chlorides or other harmful additives that could cause corrosion of the anchor bolts." 3.5.A takes care of the first one.	A	Comment Incorporated
16	3.9.B	Boyd W	7/23/2007	Replace 6 inches with 2 ft. Change concrete removal depth	A	Comment Incorporated
17	**13552**			**Ramp Meter Signals and Signing**		
18	1.2	Jason Richins	7/31/2007	02466 needs to be added	A	Comment Incorporated
19	1.3.A	Degen Lewis / Boyd W	7/10/2007	Standard Specifications changed to LRFD Bridge Construction Specifications, current edition	A	Comment Incorporated

General ATMS, Ramp Meter, Cabinet, CCTV, new HAR, new NID, and Fiber Optic Communication Spec Comment Resolution Log

UDOT, FHWA, Suppliers
JL = John Leonard
RS = Roland Stanger (FHWA)
Robert Miles
Mark Taylor
TMD = ITS Standards Group, see note
Jason Richins
Boyd Wheeler
Karl Verhaeren (ACEC-Consultant)
Degen Lewis
Steve O'Connor

TransCore
Dwayne Fontaine
Aaron Cloward
Todd Mac Gillvray
Gerard Kies
Aaron Buchanan
Jonathan Turner

Specs Reviewed
13551, 13552, 13555, 13556, new 13558, new 13559, and 13594

Response Code Legend
A - Add or Correct
B - Clarify or Evaluate
C - Additional Information Needed
D - Not Cost Effective / Preference
E - Disagree
F - Delete Comment

ID #	Sheet #	Comment made by:	Comment Date	Comment	Response Code	Response
20	1.3.E	Todd M	7/10/2007	…'current edition' added	A	Comment Incorporated
21	1.4.B.2	Todd M	7/10/2007	Burn Test specified as ATMS	A	Comment Incorporated
22	1.4.B.6	Todd M	7/10/2007	Drawings indicated to have GPS locations	A	Comment Incorporated
23	2.2 A	RS/JL	8/8/2007	Section 2.2, A, provide a separate indication for each lane of travel for law enforcement.	B	Under evaluation.
24	2.2 A	RS/JL	8/8/2007	Section 2.2, A, consider making the lens white, not red.	B	Under evaluation.
25	2.2 C	RS/JL	8/8/2007	Section 2.2,C, remove 'MUTCD'. The reference to the sign type should be enough.	D	
26	2.2 D	RS/JL	8/8/2007	Section 2.2, D, add new sign numbers to sign type.	A	Comment Incorporated
27	2.3 B	RS/JL	8/8/2007	Section 2.3, B, add new sign numbers to sign type.	A	Comment Incorporated
28	2.4	Todd M	7/10/2007	Flashing Beacon Sign changed to Warning	A	Comment Incorporated
29	2.4	Todd M	7/10/2007	Section A removed (Two 8-inch signal heads with yellow LED Module)	A	Comment Incorporated
30	2.4	Todd M	7/10/2007	Part D (All Signal Head housings) removed	A	Comment Incorporated
31	2.4.B	Todd M	7/10/2007	"'Metering when flahsing' sign" changed to "'Meter on' Blankout Sign"	A	Comment Incorporated
32	3.2.A	Todd M	7/10/2007	"Conform to..." reworded as "Provide all material and workmanship according to…"	A	Comment Incorporated
33	3.2.A	Todd M	7/10/2007	Standard Specifications changed to LRFD Bridge Construction Specifications	A	Comment Incorporated
34	3.2.B	Todd M	7/10/2007	Utilities specified as "underground and overhead "	A	Comment Incorporated
35	3.2.C	Todd M	7/10/2007	Flashing Beacon Assembly changed to Warning	A	Comment Incorporated
36	3.2.D	Todd M	7/10/2007	Section 02466 added for referral	A	Comment Incorporated
37	3.2	Todd M	7/10/2007	Section E Replaced with new drilling instructions	A	Comment Incorporated
38	3.2	Todd M	7/10/2007	Removed Section F: Place concrete directly into the excavation. Use minimum forming	A	Comment Incorporated
39	3.2.G	Todd M	7/10/2007	"according to" changed to "per"	A	Comment Incorporated
40	Table 1	Todd M	7/10/2007	"Advance Flashing Beacon Signal" changed to "Advanced Warning Blankout"	A	Comment Incorporated
41	3.8.D	Todd M	7/10/2007	"Side" changed to "Lower"	A	Comment Incorporated
42	3.11.B	Todd M	7/10/2007	at time of bid' placed in parenthesis	A	Comment Incorporated
43	**13555**			**ATMS CABINET**		
44	1.1.A	Aaron B	4/23/2007	"Furnish and install" reworded as 'Materials and procedures for installing'	A	Comment Incorporated
45	1.1.A	Aaron B	4/23/2007	Installation specified as "ATMS cabinets according to the contract"	A	Comment Incorporated
46	1.1.B	Aaron B	4/23/2007	Removed: Install state furnished ATMS Cabinet	A	Comment Incorporated
47	1.1.B	Aaron B	4/23/2007	on plans and details' changed to 'in the contract'	A	Comment Incorporated
48	1.3.A	Todd M	5/18/2007	ASTM A 123 altered to AASHTO M 111	A	Comment Incorporated
49	1.3.D	Todd M	5/18/2007	EIA and TIA added as reference	A	Comment Incorporated
50	2.1	Aaron B	4/23/2007	ATMS CABINET section added (now 2.1)	A	Comment Incorporated
51	2.1.B	Todd M	7/25/2007	"approximate" removed	A	Comment Incorporated
52	2.1.C	Todd M	7/25/2007	Part C appeneded, indicating items necessary to construct a complete and operational pole-mounted ATMS cabinet.	A	Comment Incorporated
53	2.2.D	Todd M	7/25/2007	ASTM A 123 altered to AASHTO M 111	A	Comment Incorporated
54	3.1.A	Todd M	7/25/2007	Appended: ITS Project Manager nofitcation time	A	Comment Incorporated
55	3.3	Jason R	7/31/2007	maybe combine A & F in same paragraph or move F to B and move B and everything else down. F is as important as A, but gets lost at the bottom.	A	Comment Incorporated
55	3.3	Aaron B	4/23/2007	Instances of ATMS Cabinet altered to Pad-Mounted ATMS Cabinet	A	Comment Incorporated

General ATMS, Ramp Meter, Cabinet, CCTV, new HAR, new NID, and Fiber Optic Communication Spec Comment Resolution Log

UDOT, FHWA, Suppliers

JL = John Leonard
RS = Roland Stanger (FHWA)
Robert Miles
Mark Taylor
TMD = ITS Standards Group, see note
Jason Richins
Boyd Wheeler
Karl Verhaeren (ACEC-Consultant)
Degen Lewis
Steve O'Connor

TransCore

Dwayne Fontaine
Aaron Cloward
Todd Mac Gillvray
Gerard Kies
Aaron Buchanan
Jonathan Turner

Specs Reviewed

13551, 13552, 13555, 13556, new 13558, new 13559, and 13594

Response Code Legend

A - Add or Correct
B - Clarify or Evaluate
C - Additional Information Needed
D - Not Cost Effective / Preference
E - Disagree
F - Delete Comment

ID #	Sheet #	Comment made by:	Comment Date	Comment	Response Code	Response
56	3.3.D	Aaron B	4/23/2007	"plans" changed to "contract"	A	Comment Incorporated
57	3.3.D	Todd M	7/25/2007	Power connections indicated to comply with the NEC	A	Comment Incorporated
58	3.4	Aaron B	4/23/2007	Section 3.4 inserted: "INSTALL POLE-MOUNTED ATMS CABINET"	A	Comment Incorporated
59	3.4.E	Todd M	7/25/2007	Part E appended: Connect power as specified in the contract and comply with the NEC.	A	Comment Incorporated
60	**13556**			**Closed Circuit Television Assembly**		
61	General	Aaron B	5/16/2007	In preparation for the 2008 standards, the title and date has been changed to what will be seen in the 2008 standard book.	A	Comment Incorporated
62	1.1	Aaron B	9/16/2006	Match format with other specs. Remove M&P wording and add to M&P. Condense paragraphs to include only brief description of what main tasks will be presented in the spec.	A	Comment Incorporated
63	1.1 B	Todd M	7/25/2007	Change CCTV composite cable to state furnished and leave info for now.	A	Comment Incorporated
64	1.2	Gerard	4/30/2007	Should we reference the survey Spec?	A	Comment Incorporated
65	1.2.A	Todd M	5/3/2007	Add reference to the Drilled Shaft spec.	A	Comment Incorporated
66	1.3	Todd M	6/6/2007	Sec. E Omitted: Electronic Industries Association (EIA) Standards	A	Comment Incorporated
67	1.3	Todd M	6/6/2007	Sec. F Omitted: International Municipal Signal Association (IMSA) Standards	A	Comment Incorporated
68	1.3 A	Todd M	6/20/2007	New sub-section A Inserted: AASHTO M 270: Standard Specification for Structural Steel for Bridges	A	Comment Incorporated
69	1.3.B	Todd M	4/26/2007	Add "current edition"	A	Comment Incorporated
70	1.3.C	Todd M	4/26/2007	References should go to the LRFD Bridge Construction Specs.	A	Comment Incorporated
71	1.3.C	Aaron B	3/3/2007	Add reference to ASTM C1107 for grout	A	Comment Incorporated
72	1.3 D	Todd M	7/25/2007	Part D now reads: American Iron and Steel Institute (AISI)		
73	1.3.G	Aaron B	3/22/2007	Should be National Electrical Code	A	Comment Incorporated
74	1.4.A.2	Aaron B	8/30/2006	Match testing form title "30 Day ATMS Burn-In Test"	A	Comment Incorporated
75	1.4.A.5	Gerard	4/30/2007	Mention GPS locations on As-Built Drawings	A	Comment Incorporated
76	2.1	Aaron B	3/22/2007	Remove Wood Pole option, add lowering pole and vertical luminaire extensions options.	A	Comment Incorporated
77	2.1 C	Todd M	7/24/2007	Removed "on signal pole" for luminaire mounted CCTV	A	Comment Incorporated
78	2.2	Todd M	6/20/2007	Added new Sec. C: Anchor Bolt Templates: AASHTO M 270 Grade 36.	A	Comment Incorporated
79	2.2.A	Aaron B	3/29/2007	Change "See" to "Refer to"	A	Comment Incorporated
80	2.2.C	Aaron B	3/3/2007	Add reference to ASTM C1107 for grout	A	Comment Incorporated
81	2.4.A	Aaron B	12/18/2006	Format should be "State-Furnished"	A	Comment Incorporated
82	2.4.A	Aaron B	9/15/2006	Differentiate between positioner cameras and dome cameras.	A	Comment Incorporated
83	2.4 A	Todd M	7/25/2007	Added Section 3: IPS-RDPE-2: Remote Data Port Enclosure, 24 Volt Power Supply, IPS cable.	A	Comment Incorporated
84	2.4.A.1	Aaron B	4/30/2007	Add RDPE to positioner cameras	A	Comment Incorporated
85	2.4.A.1	Todd M	7/25/2007	Removed "Remote Data Port Enclosure and cabling"	A	Comment Incorporated
86	2.4.A.2	Todd M	7/25/2007	added "with integrated pan/tilt unit"	A	Comment Incorporated
87	2.4.A.2	Todd M	7/25/2007	removed "and cabling"	A	Comment Incorporated
88	2.5	Aaron B	3/29/2007	Add materials for the Camera Lowering System.	A	Comment Incorporated
89	2.5	Todd M	4/27/2007	Removed "Rigid Conduit Attachment" from list of materials	A	Comment Incorporated
90	2.6	Todd M	7/25/2007	Inserted new section: C. All stainless steel fasteners and attachment hardware for bands and other equipment: AISI Type 316	A	Comment Incorporated

General ATMS, Ramp Meter, Cabinet, CCTV, new HAR, new NID, and Fiber Optic Communication Spec Comment Resolution Log

UDOT, FHWA, Suppliers

JL = John Leonard
RS = Roland Stanger (FHWA)
Robert Miles
Mark Taylor
TMD = ITS Standards Group, see note
Jason Richins
Boyd Wheeler
Karl Verhaeren (ACEC-Consultant)
Degen Lewis
Steve O'Connor

TransCore

Dwayne Fontaine
Aaron Cloward
Todd Mac Gillvray
Gerard Kies
Aaron Buchanan
Jonathan Turner

Specs Reviewed

13551, 13552, 13555, 13556, new 13558, new 13559, and 13594

Response Code Legend

A - Add or Correct
B - Clarify or Evaluate
C - Additional Information Needed
D - Not Cost Effective / Preference
E - Disagree
F - Delete Comment

ID #	Sheet #	Comment made by:	Comment Date	Comment	Response Code	Response
91	2.7, 2.8	Aaron B	4/30/2007	The original 2005 Specs had a long description of what was needed for surge suppression. In the latest supplemental it was replaced with the RDPE that comes with the positioner camera. Is this still correct?	A	Comment Incorporated
92	2.7, 2.8	Aaron C	4/30/2007	The RDPE doesn't provide surge suppression. If UDOT wants surge suppression, it should make it state furnished, contractor installed. If it is to be state furnished, then a long description is not needed.	A	Comment Incorporated
93	2.7, 2.8	Matt S	5/22/2007	What do all of the acronyms mean? +10/-Vp? VSWR?	A	Comment Incorporated
94	2.9	Aaron B	4/20/2007	Add "Composite" to the title	A	Comment Incorporated
95	2.9.A.2	Matt S	5/22/2007	Is this conductor shielded?	A	Comment Incorporated
96	2.9	Matt S	5/22/2007	Will this cable be state-furnished or contrator-furnished?	A	Comment Incorporated
97	2.10	Aaron B	9/15/2006	Add new article for conduit and reference 13553.	A	Comment Incorporated
98	3.1	Todd M	7/25/2007	Insert New Sec. A: Notify the ITS Project Manager a minimum of 14 calendar days before picking up the State-Furnished equipment to coordinate pickup location and time.	A	Comment Incorporated
99	3.1	Todd M	7/24/2007	Mount CCTVs at the locations specified in this Section, article 2.1, CCTV Pole or Luminaire.	A	Comment Incorporated
100	3.1	Jason R	7/31/2007	3.1.H Isn't everything new or state furnished? Why should anything they install have rust, or mill scale on them. Everything should be painted or galvanized.	D	If it sits somewhere, than debris and rust does collect. Also, salvage poles may be used at some point.
100	3.1.A	Aaron B	12/18/2006	Format should be "State-Furnished"	A	Comment Incorporated
101	3.1.A	Aaron B	8/28/2006	Remove any reference to plans.	A	Comment Incorporated
102	3.1.B, 3.1.E	Aaron B	4/23/2007	Remove paragraph E and join with paragraph B	A	Comment Incorporated
103	3.1.B, 3.1.E	Aaron B	4/23/2007	Many of the materials in these paragraphs are not found in Section 2. The phrase "required for a complete and operational CCTV system" is typically used in the M&P. It is out of place in this paragraph.	F	
104	3.1.C	Aaron B	8/28/2006	Remove any reference to plans.	A	Comment Incorporated
105	3.1.D	Aaron B	4/30/2007	Add "camera" to the list	A	Comment Incorporated
106	3.1.E	Aaron B	4/23/2007	Add paragraph to mention connecting the camera lowering system and terminating wires	A	Comment Incorporated
107	3.1.F	Aaron B	4/23/2007	Change to active voice.	A	Comment Incorporated
108	3.1 H	Todd M	7/20/2007	Removed "After Installation"	A	Comment Incorporated
109	3.2	Aaron B	4/23/2007	Remove "Steel" from the title	A	Comment Incorporated
110	3.2.A	Aaron B	4/23/2007	Change to "Provide". Reference the LRFD Bridge Construction Specs.	A	Comment Incorporated
111	3.2.A	Jason R	7/31/2007	Construction crews don't have the AASHTO LRFD Bridge Construction Specification. There isn't a Pole Foundation section in the standard. The closest thing to it would be Drilled Pipes and Shafts and that is covered pretty well with 02466. I suggest if there is something you want from the AASHTO standard write it in your standard.	A	It is well covered, I will delete ref.
112	3.2.B	Aaron B	4/23/2007	Move "underground and overhead" to before "utilities"	A	Comment Incorporated
113	3.2.C	Aaron B	4/23/2007	Remove one item list. Replace with "Excavate for foundations. Add reference to section 02466.	A	Comment Incorporated
114	3.2.D	Todd M	5/3/2007	Remove reference to AASHTO Standard Specifications	A	Comment Incorporated
115	3.2.D	Aaron B	5/3/2007	Reword paragaph to maintain active voice and reorder sentences.	A	Comment Incorporated
116	3.2.E	Todd M	4/30/2007	Remove paragraph. They are redundant.	A	Comment Incorporated
117	3.2.F	Aaron B	4/23/2007	Reorder the sentence to maintain active voice.	A	Comment Incorporated
118	3.2.G	Aaron B	4/23/2007	Uncapitalize "reinforcing steel"	A	Comment Incorporated
119	3.2.H	Aaron B	4/23/2007	Remove mention of AA(AE). This belongs in the Materials Section.	A	Comment Incorporated
120	3.2.H	Todd M	5/3/2007	Reference the placeing of concrete to sections 02466 and 03055. Concrete should be ordinary surface finish according to 03310	A	Comment Incorporated

General ATMS, Ramp Meter, Cabinet, CCTV, new HAR, new NID, and Fiber Optic Communication Spec Comment Resolution Log

UDOT, FHWA, Suppliers
JL = John Leonard
RS = Roland Stanger (FHWA)
Robert Miles
Mark Taylor
TMD = ITS Standards Group, see note
Jason Richins
Boyd Wheeler
Karl Verhaeren (ACEC-Consultant)
Degen Lewis
Steve O'Connor

TransCore
Dwayne Fontaine
Aaron Cloward
Todd Mac Gillvray
Gerard Kies
Aaron Buchanan
Jonathan Turner

Specs Reviewed
13551, 13552, 13555, 13556, new 13558, new 13559, and 13594

Response Code Legend
A - Add or Correct
B - Clarify or Evaluate
C - Additional Information Needed
D - Not Cost Effective / Preference
E - Disagree
F - Delete Comment

ID #	Sheet #	Comment made by:	Comment Date	Comment	Response Code	Response
121	3.2.I	Aaron B	4/23/2007	Move initial prepostion to the end of the sentence.	A	Comment Incorporated
122	3.3.A	Aaron B	4/23/2007	Reference to section 13551 similar to the Ramp Meter Spec.	A	Comment Incorporated
123	3.4	Aaron B	4/23/2007	Remove "Steel" from the title	A	Comment Incorporated
124	3.4.A	Aaron B	5/3/2007	Reword to say "Install CCTV poles on concrete foundations according to". Remove reference to Standard Specs for structural supports for highway bridges.	A	Comment Incorporated
125	3.4.A	Jason R	7/31/2007	Construction crews don't have the AASHTO Standard Specifications for Structural Supports for Highway Signs, Luminaires, and Traffic Signals. This particular section is small. It would be better to pull the information into your standard. Instead say, "Galvanize structural tubing and nuts, washer, bolts and anchor bolts as per AASHTO M 111 and M 232." In structures, we prefer to galvanize all of the anchor bolts. This standard only requires them to be galvanized down 4" into the concrete.	A	I'll delete this since all anchor bolts are state furnished
126	3.4.B	Aaron B	4/23/2007	Reword the first sentence.	A	Comment Incorporated
127	3.4.B	Aaron B	5/30/2007	Handoholes for nonlowering pols should be directed away from traffic. Camera lowering handholes must be under the camera lowering assembly which is typically facing traffic.	A	Comment Incorporated
128	3.4 B	Todd M	7/24/2007	Removed "and protect the structural steel" for pole installation instructions	A	Comment Incorporated
129	3.4.C	Aaron B	9/15/2006	Move this paragraph to the Junction Box Article. Add paragraph to install groung lug and ground wire.	A	Comment Incorporated
130	3.4.D	Aaron B	9/15/2007	This paragraph is already covered in paragraph 2.5	A	Comment Incorporated
131	3.4.E	Aaron B	9/15/2007	This paragraph is already covered in paragraph 3.1	A	Comment Incorporated
132	3.4.F	Aaron B	4/23/2007	Move first phrase to the end of the sentence	A	Comment Incorporated
133	3.4.G	Aaron B	4/23/2007	Remove pole mounted cabinet paragraph. This will be covered in 3.9	A	Comment Incorporated
134	3.4	Aaron B	4/23/2007	Add paragraph to mention lowering cable should not contact any other cables.	A	Comment Incorporated
135	3.4	Aaron C	4/30/2007	If the lowering cable requirement to avoid contact is not detailed, there will be hundreds of ways that the contractor will try to do this.	B	We can evaluate different options, in the future, but we don't want to tie the Contractor's hands on this. Observation and consultation will solve this over time.
136	3.4	Bill B	5/22/2007	Ask other states what they have required for camera lowering cable.	B	Done to an extent already in preparing the Camera Lowering RFP. This is why the specs and details for the system were written the way they were. The training session will give us additional ideas to refine our standards when it occurs.
137	3.5	Aaron B	8/30/2007	Remove all references to wood poles	A	Comment Incorporated
138	3.5	Todd M	6/20/2007	Remove "camera lowering", inserted "camera and camera housing"	A	Comment Incorporated
139	3.5 B	Todd M	6/6/2007	Add: Assemble the Camera Lowering system on CCTV pole and install per manufacturer's instructions at the job site.	A	Comment Incorporated
140	3.5	Aaron B	4/23/2007	Add Camera Lowering assemblies to the title and paragraphs.	A	Comment Incorporated
141	3.5 C	Todd M	6/6/2007	Replaced "assemblies" with CCTV and Camera Lowering systems	A	Comment Incorporated
142	3.6 A	Todd M	7/25/2007	Changed "Camera cables" to CCTV composite cables	A	Comment Incorporated
143	3.6.B	Todd M	4/27/2007	Add "terminate the cabling"	A	Comment Incorporated
144	3.6 D	Todd M	7/25/2007	Cables Specified as CCTV Composite	A	Comment Incorporated
145	3.6 E	Todd M	7/25/2007	Added "surge suppression device and communications equipment" as requirement	A	Comment Incorporated
146	3.6	Aaron B	4/23/2007	Add "Composite" to the title	A	Comment Incorporated
147	3.6.A	Aaron B	4/23/2007	Change second sentence to active voice	A	Comment Incorporated

General ATMS, Ramp Meter, Cabinet, CCTV, new HAR, new NID, and Fiber Optic Communication Spec Comment Resolution Log

UDOT, FHWA, Suppliers
JL = John Leonard
RS = Roland Stanger (FHWA)
Robert Miles
Mark Taylor
TMD = ITS Standards Group, see note
Jason Richins
Boyd Wheeler
Karl Verhaeren (ACEC-Consultant)
Degen Lewis
Steve O'Connor

TransCore
Dwayne Fontaine
Aaron Cloward
Todd Mac Gillvray
Gerard Kies
Aaron Buchanan
Jonathan Turner

Specs Reviewed
13551, 13552, 13555, 13556, new 13558, new 13559, and 13594

Response Code Legend
A - Add or Correct
B - Clarify or Evaluate
C - Additional Information Needed
D - Not Cost Effective / Preference
E - Disagree
F - Delete Comment

ID #	Sheet #	Comment made by:	Comment Date	Comment	Response Code	Response
148	3.6.C	Aaron B	4/23/2007	Change sentence to active voice.	A	Comment Incorporated
149	3.6.E	Aaron B	4/23/2007	Replace RS-422/RS-232 converter and communcations equipment with the RDPE.	A	Comment Incorporated
150	3.8	Aaron B	4/23/2007	Isn't the conductor information covered in section 2.9?	B	Under evaluation.
151	3.9	Aaron B	4/23/2007	Instead of specifying a new product here, reference the ATMS Cabinet spec and add the details there.	A	Comment Incorporated
152	3.9	Todd M	6/6/2007	Add: (at time of bid)	A	Comment Incorporated
153	3.1	Aaron B	4/23/2007	Match Standard drawing on when a junction box should be placed.	A	Comment Incorporated
154	2.7, 2.8, 2.9	Aaron C	8/3/2007	Make suppression and composite cable state furnished.	A	Comment Incorporated
155	**13557**			**Variable Message Sign**		**See Jason Richins Submittal Documentation**
156	1.1.A	Todd M	4/30/2007	Departement furnished changed to State furnished	A	
157	1.2	Todd M	7/18/2007	Sections 02166,03055,03211,and 03310 removed. Section 13553 added	A	
158	1.3	Todd M	7/18/2007	All References removed because they were not used	A	
159	?	Todd	4/30/2007	Add flexible watertight conduit. Reference the conduit spec	A	
160	All	Structures	5/2/2007	Structures made many comments and changes. They have comments from ITS also.	A	
161	1.4	Todd M	7/23/2007	DEFINITIONS indicated as "Not used"	A	
162	1.5	Todd M	7/23/2007	Mill Certificates removed from submittals list (part A)	A	
163	1.5	Todd M	7/18/2007	Shop Drawings removed from submittals list (part B)	A	
164	1.5.A.6	Todd M	4/30/2007	As-Built drawings indicate to have GPS locations	A	
165	1.5	Todd M	7/23/2007	Item Number and name on all certificates removed from submittals list	A	
166	2.1	Todd M	7/18/2007	VMS Foundations deleted, reference made to Section 02893.	A	
167	2	Todd M	7/18/2007	VMS Supports and VMS Catwalks removed (2.3-2.4)	A	
168	3.1.A	Todd M	7/18/2007	ITS Project Manager Notification Appended (part A)	A	
169	3.1	Todd M	7/18/2007	Old Part A and B (now B&C) remain, all other sub-sections removed	A	
170	3.1.D	Todd M	7/18/2007	New Part D appended: Deploy traffic control devices, personnel, or both (section 01554)	A	
171	3.2	Todd M	7/18/2007	Section head changed from Construction Sequence to Installation	A	
172	3.2	Todd M	4/30/2007	New Parts A-J appended. All old sub-sections removed	A	
173	3.3&3.4	Todd M	7/18/2007	VMS Foundations and VMS Supports removed	A	
174	3.6	Todd M	4/30/2007	Test forms indicated to be "at time of bid"	A	
175	3.6.A.1.b	Todd M	4/30/2007	"plans and specifications" chaged to "contract"	A	
176	**13558**			**Highway Advisory Radio (HAR) Preparation**		
177	2.1 A	RS/JL	8/8/2007	Section 2.1, A, do we want to use wood poles? (see comment 20)	A	Yes, steel poles will interfere with the radio, and concrete and fiberglass poles are cost prohibitive.
178	2.1	RS/JL	8/8/2007	Section 2.1, if we have three options, why do we only show the wood option on Standard Drawing AT-13?	A	see above response
179	1.1	Aaron C	8/3/2007	HAR vendor will do all HAR testing and provide operation. Move to state furnished row.	A	Comment Incorporated
180	Footer	Aaron C	8/3/2007	Fix footer section #	A	Comment Incorporated
181	Title/Footer	Aaron C	8/3/2007	Replace "system" with "preparation"	A	Comment Incorporated
182	2.1.B and 2.2	Aaron C	8/3/2007	Delete refs to fiberglass pole since we don't have enough info and it's costly.	A	Comment Incorporated

General ATMS, Ramp Meter, Cabinet, CCTV, new HAR, new NID, and Fiber Optic Communication Spec Comment Resolution Log

UDOT, FHWA, Suppliers

JL = John Leonard
RS = Roland Stanger (FHWA)
Robert Miles
Mark Taylor
TMD = ITS Standards Group, see note
Jason Richins
Boyd Wheeler
Karl Verhaeren (ACEC-Consultant)
Degen Lewis
Steve O'Connor

TransCore

Dwayne Fontaine
Aaron Cloward
Todd Mac Gillvray
Gerard Kies
Aaron Buchanan
Jonathan Turner

Specs Reviewed

13551, 13552, 13555, 13556, new 13558, new 13559, and 13594

Response Code Legend

A - Add or Correct
B - Clarify or Evaluate
C - Additional Information Needed
D - Not Cost Effective / Preference
E - Disagree
F - Delete Comment

ID #	Sheet #	Comment made by:	Comment Date	Comment	Response Code	Response
183	2.1.C	Todd M	8/8/2007	Move steel ref to 2.4	A	Comment Incorporated
184	3.1.A	Aaron C	8/3/2007	Delete as not applicable for contractor.	A	Comment Incorporated
185	3.2	Todd M	8/8/2007	Delete entire section to do with Fiberglass pole	A	Comment Incorporated
186	3.6	TMD	8/3/2007	Change from HAR to Power & Communication cables.	A	Comment Incorporated
187	3.9.A.2-3	Aaron C	8/3/2007	Delete since contractor won't do this. State Furnished.	A	Comment Incorporated
188	**13559**			**Non-Intrusive Detector (NID) System**		
189	2.5.A	Aaron C	8/3/2007	Make enclosure state furnished.	A	Comment Incorporated
190	3.2.D and 3.2.E	Steve O'Connor	7/25/2007	Change from 40 ft to 100 ft, without voiding warranty. This is the current practice.	A	Comment Incorporated
191	3.4.D	Steve O'Connor	7/25/2007	Add 15 ft slack in all pull boxes.	E	Not needed
192	2.1.A.1	Steve O'Connor	7/25/2007	Add "Contact Closure Cards: Wavetronix Click! 100, 172 or 174 or approved equal." as item c and the 202, and 205 power supplies in item b.	A	Comment Incorporated
193	**13594**			**FiberOpticCommunication**		
194	1.4	Todd M	3/22/2007	Sections D. Backbone; E. Disctribution; F. Drop removed	A	Comment Incorporated
195	2.2.G	Todd M	4/10/2007	Lubrication Equation Q=0.0008*D*L added	A	Comment Incorporated
196	2.3.A.1.a	Todd M	4/9/2007	Connectors modified to indicate ST is standard	A	Comment Incorporated
197	2.3.D	Todd M		Provide 3 ft long fan-out kits so contract doesn't cut them short.	A	Comment Incorporated
198	3.2.J	Todd M	3/22/2007	Minimum slack requirements added	A	Comment Incorporated
199	2.4.A	Aaron C	8/3/2007	Delete 4 and 5 to open up enclosure options.	A	Comment Incorporated
200	3.2	Tam S	8/3/2007	Secure and neatly tie fiber terminations.	A	Comment Incorporated
201	3.7	Bill B	8/3/2007	Remove C. We won't pay them to do this.	A	Comment Incorporated
202	3.7.D.15	Lynne Y	8/3/2007	Change from floppy to digital media submittal.	A	Comment Incorporated
203	3.2.K	Todd M	5/18/2007	Removed: shown in the contract	A	Comment Incorporated
204	2	Dwayne F		Provide span ID and other information on cabel labels	A	Comment Incorporated

SECTION 13551

GENERAL ATMS REQUIREMENTS

~~**Delete Section 13551 and replace with the following:**~~

PART 1 GENERAL

1.1 SECTION INCLUDES

A. Materials and procedures for installing all ATMS components as defined in the contract.

B. Provide all documentation required for the installation and testing of ATMS components.

1.2 RELATED SECTIONS

A. Section 00725: ~~:~~ Scope of Work

B. Section 01554: Traffic Control

C. Section 01721: Survey

D. Section 13591: Traffic Monitoring Detector Loop

E. Section 13595: ATMS Integration

1.3 REFERENCES

A. AASHTO M 232: ~~–~~Standard Specification for Zinc Coating (Hot~~-~~-Dip) on Iron and Steel Hardware ~~(nuts, washers, and anchor bolts)~~

~~B. AASHTO M 314: Standard Specification for Anchor Bolts, Steel, 36, 55, and 105-ksi Yield Strength~~

~~C~~B. AASHTO Roadside Design Guide, ~~(~~current edition~~)~~

C~~D~~. AASHTO Standard Specifications for Structural Supports for Highway Signs, Luminaires and Traffic Signals, ~~(~~current edition~~)~~

~~E. ASTM D 3005, Type I or II. UL 510~~D. ASTM F 1554: Standard Specification for Anchor Bolts, Steel, 36, 55, and 105-ksi Yield Strength

~~F~~E. American Wire Gauge (AWG)

~~G~~F. International Building Code (IBC)

~~H~~G. International Municipal Signal Association (IMSA)

~~I~~H. Manual on Uniform Traffic Control Devices (MUTCD; current edition)

~~J~~I. National Electrical Code (NEC)

~~K~~J. National Electrical Safety Code (NESC)

~~L. Rural Electrical Association (REA) Bulletins~~

~~M. USDA Rural Utilities Service (RUS) Bulletin~~

~~N~~K. Underwriters Laboratory (UL)

1.4 DEFINITIONS

A. ATMS - Advanced Traffic Management System

B. CCTV - Closed Circuit Television

C. RMS - Ramp Meter System

D. RWIS - Roadway Weather Information System

E. TMS - Traffic Monitoring Station

F. VMS - Variable Message Sign

G. WIM - Weigh In Motion

1.5 SUBMITTALS

A. Provide two copies of all documentation to the Engineer. Install one additional copy in a weatherproof sealable sleeve and place in each field cabinet.

B. The general purpose and content of all required submittals is described in Table 1. Refer to the appropriate specifications for details of the submittal requirements and test procedures for each ATMS device. Obtain UDOT's newest version (at time of bid) of the test procedures for the local field operations test from the UDOT website. Refer to ~~http://www.udot.utah.gov/index.php/m=c/tid=719~~http://www.udot.utah.gov/go/standardsreferences.

Table 1
Submittal Requirements

Name	Timeline	Description
Contractor Furnished Material and Equipment Lists	Submit within 15 business days from Notice to Proceed.	Include the name of manufacturer, size, and identification number. Obtain approval from the Engineer before ordering any contractor furnished equipment.
Test Reports (for Cable and Conductor Test, the Local Field Operations Test, and Acceptance Tests.)	Submit within five business days from the completion of a successful test.	Provide after the completion of a successful test. Test Reports are required for each appropriate ATMS device installation, including, but not limited to CCTV, VMS, RWIS, WIM, Traffic Monitoring Detector Loops or other specified detection device, and Fiber Optic Communication Systems. Provide Test Reports in a neatly bound (3-hole) and printed format. Include the following in the Test Reports: 1) All test results (including failed tests) 2) Description of any observed discrepancies 3) Description of required corrective action 4) Estimated time to complete corrective action and re-test 5) Results of any corrective action

Name	Timeline	Description
Completion Notice	Provide to the Engineer after all devices have successfully passed the Local Field Operations Tests, at least five business days before beginning acceptance tests.	Consists of the certification that all ATMS installations are compliant with all project requirements. Use the Local Field Operations Testing Completion Notification Form obtained from the UDOT website.
Compliance Certificate	Submit within five business days of receipt from the Manufacturer for each site.	Provide an installation compliance certification from the manufacturer on required equipment.
Manufacturer's Equipment Documentation	Must be received and accepted before Final Acceptance	Submit all factory issued manuals (per this Section), software, detailed shop drawings, wiring diagrams, certifications, warrantees, instruction sheets, and part lists for all contractor furnished items to the engineer.
As-Built Drawings	Hold Final Inspection after initial drawings are submitted. Notify and have Region Blue Stakes Coordinator present at Final Inspection. Final drawings m~~M~~ust be received and accepted before Final Acceptance	Refer to Section 01721

B. As-Built Drawings

1. Submit five hard copies and an electronic copy to the Engineer.

C~~B~~. Factory Issued Manuals

1. Acceptable factory manuals must contain technical, diagnostic, and maintenance (preventative and troubleshooting) information. Advertising brochures and catalog cuts are not ~~accepted~~acceptable.

1.6 WARRANTY

A. Provide warranties ~~of merchantability and fitness for a particular purpose~~ for all workmanship, furnished equipment, ~~as a whole, each of its~~and components~~, and the workmanship~~ for ~~the duration of~~ one year ~~from~~ following the date of acceptance ~~of the entire project by the Department~~.

B. Warranties are not required for State-Furnished equipment.

C. Take any corrective action necessary during the ~~W~~ warranty ~~P~~period, within 72 hours of being notified by the Engineer, to restore any identified deficiency caused by defective workmanship or materials. Repair or replace defective items. Notify the Engineer when corrective action has been completed.

PART 2 PRODUCTS

2.1 WIRING

A. Copper, as specified. National Electrical Code (NEC).

B. Size as specified. American Wire Gauge (AWG).

C. Power Conductors:
1. Power source conductors, copper, type RHH, USE, or RHW.

D. Signal Cable:
1. Multi-colored cables, as specified.
2. IMSA 20-1

E. Ground Wire:
1. Solid, bare, soft-drawn, copper wire, as specified.
2. NEC 250.1.

F. ~~Splice Sealing~~Detector Loop: ~~Rural Electrical Association (REA) Bulletin 345-72.~~

~~1. Use approved direct buried, rigid body splice kits with reenterable, gel-filled encapsulant and listed in the USDA Rural Utilities Service (RUS) List of Materials, Informational Bulletin (IP) 344-2, Section 2 - Housings, Splice Cases, etc. Properly size for the cable or wire being spliced.~~

~~2. ASTM D 3005, Type I or II. UL 510.~~Use Department certified detector loop splicer.

G. Detector Cables as specified in Section 13591.

PART 3 EXECUTION

3.1 TESTING AND ACCEPTANCE

A. The following tests will be required for all appropriate ATMS devices:

1. Cable and Conductor Test
2. Local Field Operations Test
3. Acceptance Tests
4. Remote Operations Test where communication is established or available.

B. Notify the Engineer at least five working days before the proposed date and time of all tests.
   1. Obtain UDOT's newest version (at time of bid) of the ATMS Testing Prenotification Form from the UDOT Web site. Refer to http://www.udot.utah.gov/go/standardsreferences~~http://www.udot.utah.gov/index.php/m=c/tid=719~~.
   2. The Engineer or the Engineer's a~~A~~gent must witness the tests.

C. Before any connections are made, perform the Cable and Conductor Test.
   1. Obtain UDOT's newest version (at time of bid) of the ATMS Cable and Conductor Test Form from the UDOT Web site. Refer to http://www.udot.utah.gov/go/standardsreferences~~http://www.udot.utah.gov/index.php/m=c/tid=719~~.
   2. Before any testing, verify that all cables and conductors are installed as per the manufacturer's plans and recommendations.
   3. Perform all resistance testing after final termination and cable installation, but before the connection of any electronics or field devices.
   4. Replace the cable, then retest new cable as specified above should any cable fail to meet these parameters, or should any testing reveal defects in the cable.
   5. Furnish all equipment, appliances, and labor necessary to test the installed cable and conductors.

D. Refer to the ~~appropriate Standard Specification, Supplemental Specification, or Special Provision~~ contract specifications for device specific Field Operations Test procedures.

E. Refer to Section 13595 for acceptance testing procedures.

3.2 EXISTING FACILITIES

A. Until Final Acceptance, repair any damage to traffic signal equipment, lighting equipment, utilities, and other ATMS items (e.g., conduit, junction boxes, underground traffic signal circuits, cabinets, poles, power sources, or power conductors) caused by contract activities, third party activities, or failure to maintain adequate traffic control or protection of the work.
   1. Request a meeting with the Department and the party with current maintenance responsibility to verify that all existing equipment is in working order at the work site.
   2. Test all loops, cabling, connectors, cabinet operations, etc.

3. Request, coordinate, and conduct the on-site meeting and provide all labor, materials, test equipment, and test documentation.
4. Complete all testing as non-destructive.
5. If no pre-testing is performed, replace or repair any equipment that is not functioning at the time the work is completed at no additional cost to the Department.

B. Locate and mark all utilities before beginning construction.
1. Contact Blue Stakes and schedule the locating of underground utilities.
2. Contact any utilities and local government agencies not participating in Blue Stakes locate services.
3. Determine the exact location of all existing utilities by verifying markings with potholing before commencing work, and be fully responsible for any damage that might result from failure to locate and preserve any underground, surface, and overhead utilities.

C. Contact the Engineer for inspection before restoring cover to any underground facilities repaired during contract execution.

D. Identify any conflicts with existing facilities and contact the Engineer to re-locate any project foundations, trenches, or other items, before further construction work.

E. Notify utilities for verification of working clearances and arrange to have a utility company inspector on site if necessary.

F. Place electrical service requests and orders and coordinate with all other necessary utilities without delaying the project.

G. Identify and resolve any conflicts with existing utilities at locations pre-marked in the field by the d~~D~~esigner.

H. Determine right-of-way boundaries before starting work. Do not proceed on work occurring outside Department right-of-way until the required permits, environmental clearances, and approvals are obtained from all entities.

I. Do not cut any limited access fences.

J. Perform all digging using hand tools or suction if any construction is to take place within two feet of existing facilities.

3.3 LOCATION OF INSTALLED MATERIALS

A. Notify the Region Permits Officer and Blue Stakes Coordinator when ATMS elements are installed and provide them information per Section 01721.

~~A~~B. Modify proposed equipment locations to avoid conflict with underground utilities or other obstructions as required. ~~Consult~~ Obtain approval from the Engineer ~~for approval.~~before modifying locations.

~~B~~C. Coordinate with the Engineer~~ to have the Engineer or the Engineer's Agent on-site~~ to field locate all new facilities, e.g., cabinet foundations, camera poles, detector poles, and junction boxes.

~~C~~D. Field locate equipment with the Engineer.
1. Avoid areas with poor drainage, and place for minimum impact from thrown snow.
2. Place for maximum accessibility and safety for maintenance personnel.
3. Satisfy clear zone requirements as defined in the AASHTO Roadside Design Guide (current edition), Chapters 3 and 4.

~~D~~E. Minimum distance behind concrete barrier or guardrail for all above ground equipment: 3 ft.

3.4 EXCAVATION

A. Do not damage streets, sidewalks, landscaping, or other surrounding features.

B. Do not excavate wider than necessary for the proper construction of the foundations and other equipment.

C. Place the material from the excavation in a position that will minimize obstructions to pedestrian or vehicular traffic and interference with surface drainage.

D. Remove all surplus excavated material and properly dispose of it within 48 hours as directed by the Engineer.

E. Do not cover any underground materials or equipment fill under any circumstances, until inspected and approved by the Engineer.

F. Protect pedestrian and vehicular traffic from all excavations.

3.5 ANCHOR BOLTS

A. Place and hold anchor bolts in proper alignment, position, and height during the placing and vibrating of concrete.

B. Conform to minimum requirements of A~~ASHTO M 314~~STM F 1554 Grade 55 for anchor bolts. Do not weld anchor bolts to reinforcing steel. Galvanize all nuts, washers, and anchor bolts in accordance with AASHTO M 232.

C. Install anchor bolts in accordance with the AASHTO Standard Specifications for Structural Supports for Highway Signs, Luminaires and Traffic Signals (current edition) Article 5.17. Retighten all nuts after the structure is fully loaded.

3.6 TRAFFIC CONTROL

A. Refer to Section 01554.

B. Contact each business manager 48 hours before construction impacts any business access. Place business access signs (consistent with the current MUTCD) where access to the business is not readily apparent anytime an access is closed.

3.7 TEMPORARY TRAFFIC SIGNAL TIMING

A. Notify the Engineer and the Traffic Signal Coordination Engineer for approval before implementing temporary changes.

3.8 REUSE OF EXISTING CONDUIT AND JUNCTION BOXES

A. Reuse existing conduit (in-place) and junction boxes when NEC requirements and Department standards for conduit material and depth of cover can be met as specified by the Engineer.

3.9 ABANDON ATMS FACILITIES IN PLACE

A. Do not remove existing pull wire from conduit that is to be abandoned in place.

B. Obliterate all existing foundations left in place to a depth of at least ~~6 inches~~2 ft below the existing surface. Properly dispose of removed ~~concrete~~items.

C. Remove all conductors, except pull wires, being taken out of service. Cut the ends even with the end of pipe if abandoning in place.

3.10 REMOVE AND SALVAGE ATMS EQUIPMENT

A. Remove existing equipment as specified.
   1. Maintain the integrity of the equipment during removal and transport.

a. Contact the Engineer 48 hours before removal to arrange for Department inspection to verify Equipment condition, otherwise the equipment will be assumed functional and undamaged.
b. Replace damaged equipment at no additional cost to the Department.

2. Return equipment to the appropriate Department facility as indicated by the Engineer.

B. All salvageable poles and cabinets:
1. Contact the Engineer at least 48 hours before removal.
2. Return to appropriate Department facility.

C. Cable and wiring:
1. Spool all cable to be salvaged neatly onto appropriately sized spools.
2. Avoid cutting long cables whenever possible.
3. Cut cables only at splice locations or as directed by the Engineer.
4. Cap wires as described in this Section, article 3.12~~ Install Wiring3~~.
5. Do not exceed the minimum bending radius and the maximum pulling tension recommended by the manufacturer's specifications at any time.

3.11 ELECTRICAL

A. Perform all work in accordance with the National Electrical Code (NEC), National Electrical Safety Code (NESC), and International Building Code (IBC).

3.12 INSTALL WIRING

A. Conductors:
1. Clean and dry the inside of the conduit before installing conductors.
2. Install grounding conductor in all power circuit conduits (Refer to NEC, Article 250.1).
3. Use NEC approved lubricants when pulling conductors in conduit.
4. Tape and seal the ends of unused conductors and label them as spares.
5. Use conductors that are color coded as specified in IMSA and comply with NEC, Article 310.

B. Ground wire:
1. Ground wire in non-metallic conduit must run continuously and be grounded at each junction box, except in those conduits used solely for interconnect and detector circuits.
2. Bond the ground wire to the ground rod in each junction box.

C. Neatly arrange and support wiring within cabinets, junction boxes, fixtures, etc.

D. Wire splicing:
   1. Splice wires only in detection circuits where the wire type changes in the junction boxes.
   2. Mechanically secure and solder, individually insulate, and water seal all splices.

E. Do not exceed the minimum bending radius or the maximum pulling tension recommended by the manufacturer's specifications at any time.

F. Keep cable ends sealed at all times during installation using an approved cable end cap. Do not use tape to seal the cable end. Keep cable ends sealed until connectors are installed.

3.13 MAINTENANCE OR REPAIR

A. Repair, replace, maintain and operate all installed ATMS devices until Final Acceptance. Includes but is not limited to:
   1. Replacement of damaged cabling.
   2. Repair or replacement of damaged conduit and junction boxes.
   3. Repair or replacement of Department and Contractor furnished items.

B. Repair installation or replace equipment due to any damage as specified in Section 00725.

C. Emergency Maintenance: Until Final Acceptance of the ATMS device, provide emergency maintenance on a seven-day per week, twenty-four hour basis. Respond to the dispatcher within 15 minutes when called or paged by the dispatcher. Provide contacts and telephone numbers to the Engineer for the emergency service.

D. Limit emergency repair response (one hour maximum) to problems of a public safety nature, such as exposed wires or knockdowns.

E. Non-emergency repairs: Initiate other non-emergency repairs within 24 hours of notice.

F. Failure to provide adequate routine or emergency repairs will result in the Department itself making the necessary repairs~~, or through a separate contractor. The Contractor will be charged accordingly.~~ at your expense.

END OF SECTION

SECTION 13552

RAMP METER SIGNALS AND SIGNING

PART 1 GENERAL

1.1 SECTION INCLUDES

A. Materials and procedures for installing conduit, junction boxes, signal heads, signing, mounting brackets, wire, grounding, and foundations. Install all state furnished items. Includes all materials, labor, workmanship, equipment, testing, documentation, and incidental items required to install and test a complete and operational Ramp Meter system as shown in the contract.

1.2 RELATED SECTIONS

A. Section 02466: Drilled Shaft

~~A~~B. Section 02891: ~~:~~ Traffic Signs

~~B~~C. Section 02892: Traffic Signal

~~C~~D. Section 03055: Portland Cement Concrete

~~D~~E. Section 03211: Reinforcing Steel and Welded Wire

~~E~~F. Section 13551: General ATMS Requirements

~~F~~G. Section 13553: ATMS Conduit

~~G~~H. Section 13554: Polymer Concrete Junction Box

~~H~~I. Section 13555: ATMS Cabinet

~~I~~J. Section 13591: Traffic Monitoring Detector Loop

~~J~~K. Section 16525: Highway Lighting

1.3 REFERENCES

~~A. AASHTO Standard Specifications for Highway Bridges~~

~~B~~A. AASHTO ~~Standard Specifications for Highway Bridges: Division II - Construction, Section 5: Drilled Piles and Shafts~~LRFD Bridge Construction Specifications, current edition

B~~C~~. AASHTO Standard Specifications for Structural Supports for Highway Signs, Luminaires and Traffic Signals, ~~(~~current edition~~)~~

C~~D~~. American Iron and Steel Institute (AISI)

D~~E~~. American National Standards Institute (ANSI)

E~~F~~. Manual on Uniform Traffic Control Devices (MUTCD), current edition

F~~G~~. National Electrical Code (NEC)

G~~H~~. Underwriters Laboratories (UL)

1.4 DEFINITIONS Not Used
~~Not used.~~

1.~~5~~4 SUBMITTALS

A. Provide samples of materials to the Engineer for approval when requested.

B. Provide all of the following submittals as described in Section 13551:
1. Contractor Furnished Material and Equipment Lists
2. Test Reports for the Cable & Conductor Test, the Local Field Operations Test, and the 30 Day ATMS Burn-In Test
3. Completion Notice
4. Compliance Certificate
5. Manufacturer's Equipment Documentation
6. As-Built Drawings with GPS locations

PART 2 PRODUCTS

2.1 FOUNDATION

A. Concrete: Class AA(AE) Concrete (Refer to Section 03055).

B. Reinforcing Steel: Coated steel (Refer to Section 03211).

2.2 RAMP METER POLE MOUNT SIGNAL ASSEMBLY

A. One 8-inch section signal head with red LED Module for enforcement. No back plate required.

B. All signal heads: Refer to Section 02892. Louvered back plate required.

C. Regulatory Sign: MUTCD R10-6; 24-inch x 36-inch.

D. ~~-~~RS-22A"1 Vehicle Per Green" and RS-22B "2 Vehicles Per Green" Signs: 24 inch x 18 inch. Refer to AT Series Standard Drawings.

E. All signal head housings: Highway Yellow with hoods.

F. Signal Pole: Refer to Section 02892 and SL Series Standard Drawings.

G. Two "Z" bars on the back of the sign to support against thrown snow. Refer to SN Series Standard Drawings.

2.3 RAMP METER MAST ARM SIGNAL ASSEMBLY

A. All 12-inch signal heads: Refer to Section 02892. Louvered back plate required.

B. RS-23A "1 Vehicle Per Green Each Lane" and RS-23B "2 Vehicles Per Green Each Lane" Signs: 60 inch x 36 inch. Refer to AT Series Standard Drawings.

C. All signal head housings: Highway Yellow with hoods.

D. Signal Pole: Refer to SL Series Standard Drawings.

2.4 ADVANCED ~~FLASHING BEACON~~WARNING ~~SIGN~~

~~A. Two 8-inch signal heads with yellow LED Module: Refer to Section 02892. No back plate required.~~

A~~B~~. Warning Sign: W~~S~~3-3, 36-inch x 36-inch. Refer to AT Series Standard Drawings.

~~C~~B. "Meter~~ing When Flashing~~ On" Blankout Sign: 30-inch x 24-inch ~~black on yellow~~. Refer to AT Series Standard Drawings.

~~D. All signal head housings: Highway Yellow with hoods.~~

~~E~~C. Signal Pole: Refer to Section 02892 and SL Series Standard Drawings.

~~F~~D. Two "Z" bars on the back of the sign to support against thrown snow. Refer to SN Series Standard Drawings.

2.5 BOLTS AND NUTS

A. Follow Section 02892.

B. Follow Section 13551 for Anchor Bolts.

2.6 WIRE

A. Follow Section 02892 for signal cable specifications.

2.7 DETECTOR CIRCUIT

A. Follow Section 02892.

2.8 LUMINAIRE

A. Follow Section 02892 for luminaires installed on ramp meter signal pole.

B. Refer to Section 16525 for luminaires not installed on ramp meter signal pole.

C. Use 240-volt 400 watt luminaires.

2.9 GROUND ROD

A. Copper-coated steel as specified.

B. ANSI/UL 467

2.10 CONDUIT

A. Refer to Section 13553.

2.11 JUNCTION BOX

A. Refer to Section 13554.

2.12 ATMS CABINET

A. Refer to Section 13555.

2.13 MOUNTING BANDS AND BUCKLES

A. As Specified.

B. American Iron and Steel Institute, (AISI) Type 201.

C. Universal Mounting Brackets for Signals mounted on mast arm.

PART 3 EXECUTION

3.1 PREPARATION

A. Load, transport, and install all S~~s~~tate-F~~f~~urnished materials per the manufacturer's instructions and as shown in the contract.

B. Provide foundation, junction boxes, ground rod, grounding lug, conduit, signal heads, assemblies, and mounting devices, signs, and all additional equipment required for a complete and operational ramp meter system.

C. Install all wiring, conduit, and junction boxes as shown in the contract.
   1. Field locate all conduit and junction boxes to avoid drainage areas and steep slopes whenever possible.
   2. Protect existing conductors while installing new conductors.

D. Connect the controller and all wires as specified ~~by the manufacturer~~in the contract.

E. Furnish and install all incidental items, such as wire nuts, grommets, tape connectors, and electrical nuts, necessary to make the ramp meter system complete.

F. Clean equipment exterior of all rust and mill scale, dirt, oil, grease and other foreign substances after installation.

3.2 FOUNDATION

A. ~~Conform to~~ Provide all material and workmanship according to AASHTO ~~Standard Specifications for Highway Bridges~~LRFD Bridge Construction Specifications ~~for all material and workmanship~~.

B. Verify that the installation locations of the signal heads, mast arm, pole, and foundation have no conflict with existing underground and overhead utilities before work. Comply with all utility and Blue Stakes requirements.

C. See AT Series Standard Drawings for ramp meter signal assembly and advance ~~flashing beacon assembly~~warning details and placement.

D. Excavate for foundations. Refer to Sections 02466 and 13551.

~~E.~~ E. Drill shafts into either native soil or compacted fill and cast the top of the shaft against the formwork for appearance. If formwork is required during drilling, the forms may be withdrawn during concrete placement.

~~Construct caissons to conform to AASHTO Standard Specifications for Highway Bridges: Division II - Construction, Section 5: Drilled Piles and Shafts. If formwork is required during drilling, the forms may be withdrawn during concrete placement.~~

~~1. Drill caissons into either native soil or compacted fill.~~

~~2. Cast the top of the caisson against the formwork for appearance.~~

F. ~~Place concrete directly into the excavation. Use minimum forming.~~

~~G.~~ Tie reinforcing steel and conduit securely in place. Do not weld reinforcing steel, conduit, or anchor bolts.

G~~H~~. Install reinforcing steel ~~according to~~per Section 03211.

H~~I~~. Cap all conduits before placing concrete.

I~~J~~. Install weep hole in foundation per SL Series Standard Drawings.

3.3 ANCHOR BOLTS

A. Refer to Section 13551.

3.4 SIGNAL POLES

A. Install the poles on new concrete bases. Apply rust, corrosion, and anti-seize protection to all threaded assemblies by coating the mating surfaces with an approved compound.

B. Install pole with the hand hole facing away from traffic.

C. Install ground rod per contract (NEC 250).

D. All fasteners and attachment hardware for bands and other equipment: stainless steel.

E. Adjusting the anchor bolt nuts, plumb all steel poles to the vertical with all signal heads and signs installed.

F. Meet AASHTO Standard Specifications for Structural Supports for Highway Signs, Luminaires and Traffic Signals for poles.

3.5 INSTALL WIRING

A. Refer to Section 13551.

B. Mark cabinet cables with vinyl electrical color-coding tape as specified in Table 1. Meet UL 510 (Lanes numbered from left to right – include HOV bypass as left lane).

TABLE 1			
Cables Marked with Colored Tape			
	Lane One	Lane Two	Lane Three
Ramp Meter Circuit	Blue	Red	Yellow
Detector Circuit	Blue	Red	Yellow
Advance ~~Flashing Beacon Signal~~d Warning Blankout	Blue and White	Red and White	Yellow and White

C. Use Table 2 when connecting the conductors for ramp meter signal heads.

TABLE 2	
Color-Coded Conductors	
	All Lanes
Ramp Meter Signal Circuit	White- Neutral Red- Red indicative Green- Green indicative Blue- Enforcement (if present) or spare

3.6 ADVANCE FLASHING BEACON SIGN

A. Follow Section 02891.

3.7 RAMP METER SIGNAL ASSEMBLY SIGN

A. Follow Section 02891.

3.8 INSTALL SIGNAL HEADS

A. Do not install signal heads at the intersection until it is ready for operation.

B. Install directed and veiled optically programmed signals following the manufacturer's instructions. Mask each section of the signal with manufacturer recommended materials.

C. Use louvered back plates on those signal heads indicated. Use a minimum of four 0.12-inch stainless steel screws per section to mount the back plates, or according to manufacturer's instructions.

D. Install ramp meter signal head toward vehicles approaching the intersection stop-bar. ~~Side~~ Lower Signal Head: axis or indication parallel to roadway surface.

3.9 INSTALL DETECTOR LOOPS

A. Follow Section 02892.

B. Refer to AT Series Standard Drawings for location of Presence and Discharge Loop.

C. Consult the Engineer for saw cut loops.

3.10 INSTALL LUMINAIRE

A. Refer to Section 16525.

3.11 TESTING AND ACCEPTANCE

A. Perform a Detector Loop Inductance & Resistance Test as described in Section 02892. Submit Detector Loop Inductance & Resistance Test to the Engineer for acceptance.

B. Perform the Local Field Operations Test after all ramp meter elements, equipment and hardware, power supply, detection device (Refer to Section 13591) and connecting cabling have been installed.

1. Complete the Local Field Operations Test for Ramp Meters using the required form. Obtain UDOT's newest version (at time of bid) of the form from the UDOT Web site. Refer to http://www.udot.utah.gov/go/standardsreferences~~http://www.udot.utah.gov/index.php/m=c/tid=719~~.
2. Perform testing after all construction for the site has been completed and the final road surface has been constructed.
   a. It is not necessary for the communications installation to be completed at the time of testing.
   b. It is not necessary that all stations be tested concurrently.

END OF SECTION

SECTION 13555

ATMS CABINET

PART 1 GENERAL

1.1 SECTION INCLUDES

A. ~~Furnish and~~Materials and procedures for installing ATMS cabinets according to the contract. Includes installing or ~~modify~~ modifying concrete foundations. Includes pad-mounted and pole-~~-~~mounted cabinets.~~of the size and type as specified in the plans.~~

B. ~~Install state furnished ATMS Cabinet.~~ Includes all materials, labor, workmanship, equipment, documentation, and incidental items required to provide a complete and operational ATMS Cabinet as shown ~~on plans and details~~in the contract.

1.2 RELATED SECTIONS

A. Section 02892: ~~:~~ Traffic Signal

B. Section 03055: Portland Cement Concrete

C. Section 03152: Concrete Joint Control

D. Section 03211: Reinforcing Steel and Welded Wire.

E. Section 03310: ~~–~~Structural Concrete

F. Section 13551: General ATMS Requirements

G. Section 13553: ATMS Conduit

H. Section 13554: Polymer Concrete Junction Box

I. Section 13561: ATMS Power Service

1.3 REFERENCES

A. A~~STM A 123~~ASHTO M 111: Standard Specification for Zinc (Hot-Dipped Galvanized) Coatings on Iron and Steel Products

B. ASTM A 307: Standard Specification for Carbon Steel Bolts and Studs, 60 ~~,~~000 PSI Tensile Strength

C. ASTM B 766: Standard Specification for Electro-deposited Coatings of Cadmium

D. Electronic Industries Association (EIA) and Telecommunications Industry Association (TIA) Specifications

E~~D~~. National Electrical Manufacturers Association (NEMA) Standards

F~~E~~. National Electrical Code (NEC)

1.4 DEFINITIONS Not Used

1.5~~4~~ SUBMITTALS

A. Submit samples of materials for approval when requested.

B. Provide the following submittals as described in Section 13551:
1. Contractor Furnished Material and Equipment Lists
2. Manufacturer's Equipment Documentation

PART 2 PRODUCTS

2.1 ATMS CABINET

A. Pad-Mounted Cabinet: State-Furnished NEMA 3R

B. Pole-Mounted Cabinet: Provide aluminum control cabinet (0.125 inch minimum thickness) with the ~~approximate~~ maximum dimensions of 36 inch~~"~~ H x 24 inch~~"~~ W x 22 inch~~"~~ D that has the following:
1. Pole mounting hardware.
2. Anodized, bare, painted or anti-graffiti.
3. Air filter with thermostat operated fan.
4. Removable self-standing rack assembly with 1-PDA #2 with 1-power supply assembly. 19 inch~~"~~ equipment rack. EIA/TIA compliant.
5. Corrosion resistant handle with Corbin locks and padlock eye.
6. Two full size doors; 1- front, 1-rear.
7. Two position bar stops on bottom of each door.
8. Solid bottom.

9. One fluorescent light.
10. NEMA 3R compliant enclosure.

C. Provide fittings, ground rods, ground wire, other materials, equipments, labor and all incidental items necessary to construct a complete and operational pole-mounted ATMS cabinet.

2.2 CABINET FOUNDATION

A. Concrete: AA(AE) required. Refer to Section 03055.

2.3~~2~~ BOLTS, NUTS, AND HARDWARE

A. For cabinet mounts, provide wedge expansion type, or poured in place anchor bolts.
1. ~~3/4~~¾ -inch x 8-inch expansion anchor bolts.
2. 9000 lbs pullout strength.

B. Provide commercially available framing strut to attach transformers, breaker enclosures, disconnects, or other electrical equipment (Refer to AT Series Standard Drawings).
1. 12-gauge, U-shaped stainless steel channel with $^5/_8$-inch diameter pre-drilled holes.
2. Cross-section dimensions: $1^5/_8$ inch x $1^5/_8$ inch minimum.

C. For framing struts, provide wedge expansion anchor bolts to secure framing strut to foundation.
1. ~~1/2~~½ inch x 8-inch embedded a minimum of 6 inches in foundation.
2. Shear capacity of 2500 lbs and pullout tension capacity of 2600 lb~~s~~.

D. Provide stainless steel, galvanized, or zinc plated bolts, nuts, washers, struts, and hardware, as specified.
1. Steel as specified (ASTM A 307).
2. Galvanized as specified (A~~STM A 123~~ASHTO M 111).
3. Zinc plated as specified (ASTM B 766).

E. Provide nuts that are free running, by hand, for total thread length.

F. Provide all bolted connections with lock washers, locking nuts, or other approved means to prevent the connection nuts from backing off.

G. Provide nipples, elbows, and grommets necessary for wiring.

2.4~~3~~ CONDUIT

A. Refer to Section 13553.

B. Refer to Section 02892.

2.5~~4~~ JUNCTION BOX AND GROUND ROD

A. Refer to Section 13554.

B. Minimum spacing from any edge of junction box to any edge of concrete collar must be 10 inches.

2.6~~5~~ POWER SOURCE

A. Refer to Section 13561.

2.7~~6~~ TRANSFORMER AND DISCONNECT

A. Submit specifications for approval.

2.8~~7~~ EXPANSION JOINT MATERIAL

A. Preformed expansion joint filler. Refer to AT Series Standard Drawings and Section 03152.

PART 3 EXECUTION

3.1 PREPARATION

A. Notify the ITS Project Manager a minimum of 14 calendar days before picking up the ATMS Cabinet and Pole-Mounted ATMS Cabinet to coordinate pickup location and time.

B~~A~~. Use maintenance platforms when surrounding area is not paved. Platforms provide access to the cabinets for maintenance activities. Locate cabinet in an area where full access is allowed.

C~~B~~. Repair any damage to existing utilities.

D~~C~~. Restore area to the original condition after construction is completed.

3.2 CONSTRUCT CABINET FOUNDATION

A. Reinforcing Steel and Welded Wire. Refer to Section 03211.

B. Verify bolt pattern, conduit runs, and foundation dimensions before foundation construction.
   1. Install anchor bolts to accommodate conduit runs.
   2. Embed strut anchor bolts a minimum of 6 inches into foundation.
   3. Embed cabinet anchor bolts a minimum of 6 inches into foundation.

C. Concrete: Refer to Section 03055.

D. Do not weld reinforcing steel, conduit, or anchor bolts.
   1. Use tie wire to secure conduits.
   2. Use template to align and secure anchor bolts.
   3. Locate steel, conduit, or anchor bolts a minimum of 3 inches from concrete surface.

E. Place the concrete directly into the excavation. Use minimum forming above ground.

F. Provide minimum setback between foundation and all walls, guardrails, poles, and other above ground features as per Section 13551.

G. Extend conduit 2 inches above the floor of the cabinet foundation.

H. Conduit:
   1. Install all conduit in base of cabinet within a 12-inch x 18-inch rectangle centered in the cabinet base.
   2. Refer to the contract for the number, size, and orientation of all conduits entering the junction boxes.
   3. Refer to AT Series Standard Drawings for number and type of conduit used between the cabinet and adjacent junction boxes.
   4. Above ground, use galvanized rigid steel; underground, use PVC.
   5. Install bushings on the ends of all conduit before cable installation.
   6. Provide 1 inch minimum spacing between each conduit in cabinet base. Cap conduit at both ends until used.

I. Place the cabinet foundation parallel to the roadway.

J. Cabinet foundation surfaces:
   1. Ordinary Surface Finish per Section 03110
   2. Chamfer around top surface perimeter

3. Level top surface before cabinet installation

K. Place preformed expansion joint filler at concrete joints.

3.3 INSTALL PAD-MOUNTED ATMS CABINET

A. Install ~~the~~ pad-mounted cabinets so the door that accesses the front face of the control equipment is adjacent to the Type II-PC junction box. Securely fasten the cabinet onto the concrete foundation. After the cabinet has been installed on the foundation, the cabinet door must be able to fully open and close.

B. Orient cabinet on foundation with the vented door downstream of traffic.

C~~B~~. Provide a rain-tight seal that does not degrade the NEMA 3R (See NEMA Standards Publication 250-1997) rating of the enclosure for all conduit fittings and chases to adjoining enclosures.

D~~C~~. Isolate dissimilar materials from one another by stainless steel fittings.

E~~D~~. Make all power connections as shown in ~~plans~~the contract and comply with the NEC.

1. Isolate the neutral bus from the cabinet and equipment ground.
2. Terminate the neutral bus at the neutral lug attached to the meter pedestal.

F~~E~~. Caulk between base of cabinet and top of foundation to form a watertight seal.

~~F. Orient cabinet on foundation with the vented door downstream of traffic.~~

3.4 INSTALL POLE-MOUNTED ATMS CABINET

A. Install pole-mounted cabinets so the door opens downstream of traffic. Use stainless steel bands.

B. Drill and nipple holes in pole at each site. Touch-up by hot stick method.

~~C. Install cabinet such that cables enter the underside of the cabinet.~~

~~D~~C. Arrange all equipment installed in the cabinet in a neat and orderly fashion on shelf.

D. Connect power as specified in the contract and comply with the NEC.

3.5 INSTALL DISCONNECT, TRANSFORMER, OR BOTH

A. Install either a supplemental disconnect as described on AT Series Standard Drawings, or an approved underground service pedestal as described in the SL Series Standard Drawings and in Section 13561 unless otherwise specified.

B. Install disconnect or underground service pedestal between 10 and 15 feet from the cabinet, away from roadway. Field locate with the Engineer.

C. Ground disconnect on ground rod located in Type I junction box at the cabinet base.

D. Ground the transformer to the control cabinet ground terminal.

E. Install disconnect and transformer in accordance with AT Series Standard Drawings, SL Series Standard Drawings, and the NEC.

3.5 INSTALL WIRING

A. Refer to Section 13551.

B. Clamp the ground wire from the cabinet ground to the ground rod in the Type II junction box.

C. Terminate all terminal connections by a mechanical (spade) connector.

D. Identify and label all field terminals and cables.

3.6 INSTALL POWER SOURCE

A. Refer to Section 13561 for Power Service.

END OF SECTION

SECTION 13556

CLOSED CIRCUIT TELEVISION (CCTV) ASSEMBLY

~~**Delete Section 13556 and replace with the following:**~~

PART 1 GENERAL

1.1 SECTION INCLUDES

A. ~~All m~~Materials and procedures for~~, labor, workmanship, equipment, testing, documentation, and incidental items required to~~ installing and testing a complete and operational ~~Freeway~~ CCTV system as specified in the contract~~shown on plans and details~~.

B. ~~State~~ State-~~f~~Furnished non-lowering and Camera Lowering CCTV poles-~~,with foundation and anchor bolts,~~ positioner and dome CCTV assemblies~~, and CCTV composite cable~~.
~~furnish and install junction box at the base of the pole with ground rods, ground wire, and all other incidental hardware. Includes Contractor furnished CCTV Cable, and all other conduit and junction boxes required to provide a path from the CCTV pole to the control cabinet.~~

~~C. Furnish and install wood CCTV pole.~~

~~D~~C. ~~State furnished freeway CCTV assembly with pan/tilt unit, camera control receiver, and pole-mounted cabinet.~~

1.2 RELATED SECTIONS

A. Section 01721: Survey

~~A~~B. Section 02466: ~~:~~Drilled Shaft

~~B~~C. Section 03055: Portland Cement Concrete

~~B~~~~C~~D. Section 03211: Reinforcing Steel and Welded Wire

~~C~~~~D~~E. Section 03310: Structural Concrete

~~D~~~~E~~F. Section 13551: General ATMS Requirements

~~E~~~~F~~G. Section 13553: ATMS Conduit

~~F~~~~G~~H. Section 13554: Polymer Concrete Junction Box

~~G~~~~H~~I. Section 13555: ATMS Cabinet

~~H~~~~I~~J. Section 13595: ATMS Integration

1.3 REFERENCES

A. AASHTO M 270: Standard Specification for Structural Steel for Bridges

~~A. AASHTO Standard Specifications for Structural Supports for Highway Signs, Luminaires and Traffic Signals~~

~~B. AASHTO LRFD Bridge Construction Specifications, current edition.~~B. American Iron and Steel Institute (AISI)~~Standard Specifications for Highway Bridges: Division II - Construction, Section 5: Drilled Piles and Shafts~~

~~C. AASHTO Standard Specifications for Highway Bridges~~

C~~D~~~~C~~. ASTM C 1107: ~~:~~Standard Specification for Packaged Dry, Hydraulic-Cement Grout (Nonshrink)

D~~D~~. American Wire Gauge (AWG)

~~E. Electronic Industries Association (EIA) Standards~~

~~F. International Municipal Signal Association (IMSA) Specifications~~

E~~G~~~~F~~. National Electrical Code (NEC)

F~~H~~~~G~~. Underwriters Laboratory (UL)

1.4 DEFINITIONS Not Used

~~Not used.~~

1.54 SUBMITTALS

A. Provide all of the following submittals as described in Section 13551:
   1. Contractor Furnished Material and Equipment Lists

2. Test Reports for the Cable & Conductor Test, the Local Field Operations Test, and the ~~Thirty~~30- Day ATMS Burn-In Test
3. Completion Notice
4. Manufacturer's Equipment Documentation
5. As-Built Drawings with GPS locations per Section 01721

PART 2 PRODUCTS

2.1 CCTV POLE OR LUMINAIRE

~~A. Wood Pole Mounted CCTV: provide class 5 or 6 Douglas Fir wood pole, treated with Chromated Copper Arsenate CCA Type C, 33 ft nominal length and not less than 5½ inches diameter at top.~~

~~B~~A. Non-lowering CCTV Pole: ~~:~~State-Furnished 45 ft ~~S~~steel ~~P~~pole ~~Mounted CCTV: steel pole~~ with anchor bolts ~~provided by the Department~~.

B. Camera Lowering Pole: ~~:~~State-Furnished 45 ft, 60 ft, or 80 ft steel pole with anchor bolts.

C. Luminaire Mounted -CCTV: ~~:~~State-Furnished ~~L~~luminaire vertical extension on signal pole

2.2 CCTV STEEL POLE FOUNDATION

A. Class AA(AE) concrete. ~~See~~ Refer to Section 03055 and Section 03310.

B. Reinforcing Steel: ~~:~~Coated. ~~steel (~~Refer to Section 03211~~)~~.

C. Anchor Bolt Templates: AASHTO M 270 Grade 36.

D~~C~~. Non-Shrink Grout in accordance with ASTM C 1107.

2.3 JUNCTION BOX

A. Refer to Section 13554.

2.4 CCTV ASSEMBLY

A. ~~Department f~~State-Furnished:

1. Positioner Camera assembly~~, ~~: ~~including~~ includes camera, pan/tilt unit, control receiver, environmental enclosure~~, Remote Data Port Enclosure (RDPE), and cabling~~.
2. Dome Camera assembly: includes camera with integrated pan/tilt unit, control receiver, environmental enclosure~~, and cabling~~.
3. IPS-RDPE-2: Remote Data Port Enclosure, 24 Volt Power Supply, IPS cable.

2.5 CAMERA LOWERING SYSTEM

A. State-Furnished: Camera lowering assembly including suspension contact unit, pole adapter for attachment to a pole top tenon, pole top junction box, steel cable, pulleys, support arm, camera connection junction box, and portable camera lowering tool~~, and rigid conduit attachment~~.

2.6 MOUNTING EQUIPMENT

A. Provide clamp kit, mounting hardware, pipe, shims, grommet, and all additional equipment to attach CCTV assembly to pole or mast arm.

B. Provide all stainless steel or hot-dipped galvanized fasteners and hardware unless otherwise approved. Provide copper pole grounding lug.

C. All stainless steel fasteners and attachment hardware for bands and other equipment: AISI Type 316

2.~~6~~7 DATA SURGE SUPPRESSOR

A. State-Furnished~~Provide~~ D~~D~~ata Surge Suppressor with the following general characteristics (typical) and as per communication details:
1. Typical application: RS-422
2. Surge: 36 KA
3. Turn-on at 10 mA: +2.8/-0.6 VDC.
4. Resistance: 1 Ohm
5. Capacitance: 30 pF.
6. Energy: 310 ft-lb~~s~~.
7. Let-through: less than +10/-Vp (peak open circuit voltage at max current).
8. -3dB (600 Ohms) BW: 95 Mhz.
9. Temperature: -40 degrees F to 185 degrees F Storage/Operating

2.8 VIDEO SURGE SUPPRESSOR

A. State-Furnished ~~Surge suppression: Provide~~ Video Surge Suppressor with the following general characteristics (typical) and as per communication details:

1. Typical application: LAN, closed circuit video.
2. Surge: 3000 Amps
3. Turn-on Time: 4 ns for 2 kV/ns.
4. VSWR: 1.2 : 1
5. Insertion Loss: ≤0.3 dB
6. Impedance: 75 ohms
7. Temperature: -50 degrees F to 185 degrees F Storage

~~A. Surge suppression: State furnished IPS-RDPE Unit.~~

2.~~7~~9 CCTV COMPOSITE CABLE

A. State-Furnished~~Provide type~~ composite CCTV cable ~~to meet or exceed~~with the following ~~requirements~~characteristics:

1. Outer Jacket
   a. Type 4E
   b. Type CMG CMR C
   c. UL listed
   d. JKT Riser

2. Data
   a. 2 stranded conductors
   b. 18 AWG
   c. 0.10 inch PVC jacket thickness

3. Power
   a. 3 stranded conductors
   b. 12 AWG
   c. 0.12 inch PVC jacket thickness

4. Video
   a. 1-RG59 coaxial cable
   b. 95 percent Braid Coverage
   c. O/A 0.03 inch PVC

2.10 CONDUIT

A. Refer to Section 13553

PART 3 EXECUTION

3.1 INSTALLATION

A. Notify the ITS Project Manager a minimum of 14 calendar days before picking up the State-Furnished equipment to coordinate pickup location and time.

B~~A~~. Load, transport, and install all ~~state~~State-~~furnished~~ Furnished materials per the manufacturer's instructions~~ and as shown in the plans~~.

C. Mount CCTVs at the locations specified in this Section, article 2.1~~, CCTV Pole or Luminaire~~.

D~~B~~. Provide foundation, junction boxes, ground rod, grounding lug, conduit, stainless steel mounting bands, ground wire, wire nuts, grommets, tape connectors, and electrical nuts,~~ wood pole,~~ and all additional equipment and incidental items required for a complete and operational CCTV system.

E~~C~~. Install all wiring, conduit, and junction boxes as specified in the contract~~shown on site plans and details~~.

1. Field~~-~~-locate all conduits per Section 13553 and junction boxes to avoid drainage areas and steep slopes whenever possible.
2. Protect existing conductors while installing camera cables and conductors.

F~~D~~. Connect the camera, controller, and all wires as specified by the manufacturer.

G~~E~~. Connect camera lowering system and terminate wires as specified by the manufacturer.

~~E. Furnish and install all incidental items, such as wire nuts, grommets, tape connectors, and electrical nuts, necessary to make the CCTV system complete.~~

~~F~~H. ~~After installation, c~~Clear ~~the~~ equipment exterior of all~~ equipment~~ ~~must be free of all~~ loose rust and mill scale, dirt, oil, grease and other foreign substances.

3.2 ~~STEEL~~ CCTV POLE FOUNDATION

~~A. Provide A~~all ~~material and workmanship according conforms to AASHTO Standard Specifications for Highway BridgesLRFD Bridge Construction Specifications.~~

~~B~~A. Verify that the installation of the CCTV camera, pole, pole mount cabinet, junction boxes, and foundation in the location marked in the field has no conflict with existing underground and overhead utilities~~, underground and overhead~~. Comply with all utility and blue stake requirements.

B~~C~~. Excavate for foundations. Refer to~~ation~~

~~1. Refer to~~ Sections 02466 and 13551.

~~D~~C. ~~Construct Caissons to conform to AASHTO Standard Specifications for Highway Bridges: Division II - Construction, Section 5: Drilled Piles and Shafts.~~ Drill ~~caisson~~shafts into either native soil or compacted fill~~.~~

~~1. If formwork is required during drilling, the forms may be withdrawn during concrete placement.~~

~~2.~~ and ~~C~~cast the top of the ~~caisson~~shaft against the formwork for appearance. If formwork is required during drilling, the forms may be withdrawn during concrete placement.

~~E~~D. ~~Place concrete directly into the excavation. Use minimum forming.~~

~~F.~~ Tie reinforcing steel and conduit securely in place. Do not weld reinforcing steel, conduit, or anchor bolts~~; tie reinforcing steel and conduit securely in place~~.

~~G~~~~F~~E. Install ~~Reinforcing~~ reinforcing ~~Steel~~ steel ~~according to~~per Section 03211.

~~H~~~~G~~F. Place concrete per Section 02466 and 03055. Provide ordinary surface finish per Section 03310. ~~All cast-in-place concrete will be class AA(AE) except where specified otherwise.~~ Cap all conduits before placing concrete.

~~I~~~~H~~G. ~~After pole is installed, p~~Place non-shrink grout between base plate and foundation surface after pole is installed.

~~J~~H. Install weep hole in foundation per SL series Standard Drawings.

3.3 ANCHOR BOLTS

A. ~~Install anchor bolts in accordance with AASHTO Standard Specifications for Structural Supports for Highway Signs, Luminaires and Traffic Signals (current edition) Article 5.17: Anchor Bolts.~~ Refer to Section 13551.

3.4 ~~STEEL~~ CCTV POLE

~~A. Install theCCTV metal camera poles on pole concrete bases foundations as described herein. Referaccording to AASHTO Standard Specifications for Structural Supports for Highway Bridges, as well as to AASHTO Standard Specifications for Structural Supports for Highway Signs, Luminaires, and Traffic Signals section 5.18.~~

~~B~~A. Install non-lowering poles ~~such that the~~with the hand hole ~~is~~ facing away from traffic. Install camera lowering poles with the arm extended toward traffic and the hand hole 90 degrees from the arm allowing access and the view of oncoming traffic.~~directly under the camera lowering system.~~

B~~C~~. Install ground lug and connect ground wire from lug to ground rod in the junction box.~~Install ground rod. NEC 250.1.~~

~~D. All fasteners and attachment hardware for bands and other equipment: stainless steel.~~

~~E. Furnish and install all incidental items, such as wire nuts, grommets, tape connectors, electrical nuts, etc., necessary to make the CCTV system complete.~~

~~F~~C~~E~~. ~~Adjusting the anchor bolt nuts, p~~Plumb all steel poles to the vertical with all camera equipment installed when adjusting the anchor bolt nuts.

~~G~~D~~F~~. Install ~~cable lowering~~ steel lowering cable in pole such that no contact with any other cable is made during the raising and lowering of the CCTV.~~Pole Mount Cabinet~~

~~1. The Department rejects poles that are damaged by improper drilling of holes.~~
~~2. Drill and nipple holes at each site.~~
~~3. Touch-up by hot stick method.~~

~~3.5 WOOD CCTV POLE~~

~~A. Install wood pole below grade to a minimum depth equal to one-sixth the total pole height. Refer to AASHTO Standard Specifications for Structural Supports for Highway Signs, Luminaires, and Traffic Signals.~~

~~B. Increase the installation depth by one times the diameter of the pole when wood pole is installed on a slope of 2:1 or greater. Measure depth from the down-slope side of the pole.~~

~~C. Backfill with native material in 1-foot lifts to match surrounding grade. Tamp each lift to 90 percent compaction.~~

3.~~6~~5 CCTV ~~ASSEMBLY~~ AND CAMERA LOWERING ASSEMBLY

A. Assemble the ~~camera~~ CCTV ~~assembly~~~~assemblies and Camera Lowering assemblies~~system (camera and camera housing)~~s~~ and prepare for installation per the manufacturer's instructions ~~prior to~~before delivery to the job site.

B. Assemble the Camera Lowering system on CCTV pole and install per manufacturer's instructions at the job site.

C~~B~~. Deliver the ~~assemblies~~ CCTV and Camera Lowering systems to the job site~~ as complete units~~, terminate all cabling,~~,~~ and install as specified in the contract~~per the plan details~~.

3.~~7~~6 CCTV COMPOSITE CABLE~~S~~

A. I~~I~~nstall CCTV composite~~camera~~ cables in conduit and poles. Run cables continuously and without splices between the camera and cabinet.~~All cable runs must be continuous and must run without splices between the camera and the cabinet.~~

B. Keep cable ends sealed at all times during installation using an approved cable end cap. Keep cable end sealed until connectors are installed.

C. ~~Do not~~Install cable without violatinge~~e~~ the minimum bending radius and the maximum pulling tension recommended by the manufacturer's specifications at any time.

D. Provide 6 ft of CCTV composite cable slack in all cabinets. Refer to Section 13555.

E. Make all camera cable connections between the CCTV ~~assembly~~camera~~, RS-422/RS-232 converter, and communications equipment,~~ ~~and~~, RDPE (Pelco Remote Data Port Enclosure), surge suppression device and communications equipment, as required to provide a fully operational CCTV system.

~~3.8 CONDUCTORS~~

~~A. Dome CCTV: furnish and install 3-#12 stranded IMSA Spec 20-1 power conductor cables between the 24 VAC transformer in the cabinet and the cabinet assembly on the luminaire arm.~~

~~B. Freeway CCTV: furnish and install 3-#6 from camera assembly to cabinet.~~

~~C. Freeway CCTV with Pole Mounted Cabinet: furnish and install 3-#12 from camera assembly to cabinet.~~

~~D. Splices: not allowed between camera and cabinet.~~

3.~~9~~7 POLE-MOUNTED CABINET

A. ~~Install cabinet such that cables enter the underside of the cabinet.~~

~~B. Arrange all equipment installed in the cabinet in a neat and orderly fashion on shelf. Refer to Section 13555.~~

~~C. Install pole mounted cabinet such that it faces away from traffic. Use stainless steel bands.~~Refer to Section 13555.

3.~~10~~8 JUNCTION BOX

A. Install junction box near pole if control cabinet is more than 20 ft from pole.

B. Refer to Section 13554.

C. Install ground rod per NEC 250.1

3.~~11~~9 TESTING AND ACCEPTANCE

A. Successfully complete the following tests:
   1. Cable and Conductor Test: Refer to Section 13551.
   2. Local Field Operations Test: Use the Closed Circuit Television (CCTV) Local Field Operations Test form Instruction. Obtain UDOT's newest version (at time of bid) of the form from the UDOT Web site. Refer to http://www.udot.utah.gov/go/standardsreferences~~http://www.udot.utah.gov/index.php/m=c/tid=719~~.
      a. Conduct the test after the Cable and Conductor ~~test~~ Test has been successfully completed and the Cable and Conductor Test Report has been approved by the Engineer.
      b. Furnish all equipment, material, and labor necessary for the test.

3. Acceptance Tests: Refer to Section 13595.

END OF SECTION

SECTION 1355~~896~~

HIGHWAY ADVISORY RADIO (HAR) ~~SYSTEM~~PREPARATION

PART 1 GENERAL

1.1 SECTION INCLUDES

A. All materials, labor, workmanship, equipment, testing, documentation, and incidental items required to install ~~and test a complete and operational~~a Highway Advisory Radio system as shown ~~on plans and details~~in the contract.

B. Furnish and install ~~wood HAR~~HAR wood pole.

C. Furnish and install junction box at the base of the pole with ground rods, ground wire, and all other incidental hardware. ~~Includes~~Furnish and install ~~Contractor furnished~~ conduit and junction boxes required to provide a path from the HAR pole to the control cabinet junction box.

D. State-F~~-f~~urnished operational HAR system with power supply, transmitter, recorder, communication controller, ~~and~~ pole-mount antenna, testing, and documentation.

1.2 RELATED SECTIONS

~~A. Section 03310: Structural Concrete~~

~~B~~A. Section 13551: General ATMS Requirements

~~C~~B. Section 13553: ATMS Conduit

~~D~~C. Section 13554: Polymer Concrete Junction Box

~~E. Section 13555: ATMS Cabinet~~

~~F. Section 13595: ATMS Integration~~

1.3 REFERENCES

~~A. AASHTO M 31: Deformed and Plain Billet-Steel Bars for Concrete Reinforcement~~

~~A. AASHTO M 232: Standard Specification for Zinc Coating (Hot-Dip) on Iron and Steel Hardware~~

~~O~~B. National Electrical Code (NEC)

1.4 DEFINITIONS Not Used

~~Not used.~~

1.54 SUBMITTALS

A. Provide all of the following submittals as described in Section 13551:
1. Contractor Furnished Material and Equipment Lists
2. Test Reports for the Cable & Conductor Test
3. Completion Notice
4. Manufacturer's Equipment Documentation
5. As-Built Drawings with GPS locations

PART 2 PRODUCTS

2.1 HAR POLE

A. Wood Pole Mounted HAR: C~~provide c~~lass 5 or 6 Douglas Fir wood pole, treated with Chromated Copper Arsenate CCA Type C, 36~~3~~ ft ~~nominal~~ standard length and not less than 5½ inches diameter at top. Pole length may differ where approved.

~~B. Fiberglass Pole HAR: fiberglass pole with anchor bolts provided by the department. Miscellaneous items per manufacturers requirements.~~

2.22 JUNCTION BOX

A. Refer to Section 13554.

2.3~~2~~ CONDUIT AND CLAMPS

A. Refer to Section 13553.

2.4~~4~~ HAR ASSEMBLY

A. State-Furnished:
   1. HAR assembly, including transmitter, recorder, power supply, communication controller, antenna, and antenna cabl~~inge, and pole.~~.
   2. HAR cabinet

PART 3 EXECUTION

3.1 INSTALLATION

A~~A. Load, transport, and install all state-furnished materials per the manufacturer's instructions and as shown in the plans.~~

~~C~~. Install all wiring, conduit, and junction boxes as specified in the contact.
   1. Field locate all conduits per Section 13553 and junction boxes to avoid drainage areas and steep slopes whenever possible.
   2. Protect existing conductors while installing HAR cables and conductors.

B~~E~~. Furnish and install all incidental items, such as bushings, conduit clamps, and conduit transition elements per the NEC.~~.~~

C

~~F~~. After installation, clear the exterior of all equipment ~~must be free~~ of all loose rust and mill scale, dirt, oil, grease and other foreign substances.

~~3.2 FIBERGLASS HAR POLE FOUNDATION~~

~~A. All material and workmanship conforms to AASHTO's Standard Specifications for Highway Bridges.~~

~~B. Verify that the installation of the HAR pole, junction boxes, and foundation in the location marked in the field has no conflict with existing utilities, underground and overhead. Comply with all utility and blue stake requirements.~~

~~C. Excavation~~

~~1. Refer to Section 13551.~~

~~D. Caissons conform to AASHTO Division II Section 5, Drilled Piles and Shafts. Drill caissons into either native soil or compacted fill.~~

~~1. If formwork is required during drilling, the forms may be withdrawn during concrete placement.~~

~~2. Cast the top of the caisson against the formwork for appearance.~~

~~E. Place concrete directly into the excavation. Use minimum forming.~~

~~F. Do not weld reinforcing steel, conduit, or anchor bolts; tie reinforcing steel and conduit securely in place.~~

~~G. Coat all reinforcing steel to conform to AASHTO M 284 or M 111 and AASHTO M 31 Grade 420, respectively. Coat the ends of cut reinforcing with approved coating.~~

~~H. All cast-in-place concrete will be class AA(AE) except where specified otherwise. Cap all conduits before placing concrete.~~

3.2~~3~~ WOOD HAR POLE

A. Install wood pole below grade to a minimum depth equal to one-sixth the total pole height. ~~Refer to AASHTO Standard Specifications for Structural Supports for Highway Signs, Luminaires, and Traffic Signals.~~

B. Increase the installation depth by one times the diameter of the pole when wood pole is installed on a slope of 2:1 or greater. Measure depth from the down-slope side of the pole.

C. Backfill with native material in 1 foot lifts to match surrounding grade. Tamp each lift to 90 percent compaction.

3.3~~4~~ HAR ASSEMBLY

A. Final HAR assembly and connection performed by others.

3.4~~6~~ ~~HAR~~ POWER AND COMMUNICATION CABLES

A. Install ~~HAR~~ power and communication cables in conduit to local junction boxes. Leave sufficient slack for final installation. ~~Also i~~Include ~~mule~~ pull tape from the local junction boxes to the stubbed out conduit end for future cable installation.

B. Keep cable ends sealed at all times during installation using an approved cable end cap.

C. Do not violate the minimum bending radius and the maximum pulling tension recommended by the manufacturer's specifications at any time.

3.5~~8~~ JUNCTION BOX

A. Refer to Section 13554. Install ground rod per NEC 250.1.

3.6~~9~~ TESTING AND ACCEPTANCE

A. Successfully complete the following tests:

1. Cable and Conductor Test: Refer to Section 13551.
2. ~~Local Field Operations Test: Use the Higway Advisory Radio (HAR) Local Field Operations Test form Instruction. Obtain UDOT's newest version of the form from the UDOT Web site. Refer to http://www.udot.utah.gov/index.php/m=c/tid=719.~~
   a. ~~Conduct the test after the Cable and Conductor test has been successfully completed and the Cable and Conductor Test Report has been approved by the Engineer.~~
   b. ~~Furnish all equipment, material, and labor necessary for the test.~~
3. ~~Acceptance Tests: Refer to Section 13595.~~

END OF SECTION

SECTION 13559

NON-INTRUSIVE DETECTOR (NID) SYSTEM

PART 1 GENERAL

1.1 SECTION INCLUDES

A. Materials and procedures for installing Non-Intrusive Detector (NID) System.

1.2 RELATED SECTIONS

A. Section 01554: Traffic Control

B~~A~~. Section 02892: Traffic Signal

C~~B~~. Section 13551: General ATMS Requirements

D~~C~~. Section 13555: ATMS Cabinet

E~~D~~. Section 13556: Closed Circuit Television (CCTV) Assembly

F~~E~~. Section 13595: ATMS Integration

G~~F~~. Section 16525: Highway Lighting

1.3 REFERENCES

A. American Iron and Steel Institute (AISI)

B. National Electrical Manufacturers Association (NEMA) Standards

C. ~~NEC 250.1: National Electrical Code~~

D. SSIG: SmartSensor™ Installation Guides~~, Models SS105, SS125, and SS200~~

1.4 DEFINITIONS **Not Used**

~~**Not used.**~~

1.5 SUBMITTALS

A. Provide all of the following submittals as described in Section 13551:

1. Contractor Furnished Material and Equipment Lists
2. Test Reports for the Cable & Conductor Test, the Local Field Operations Test, and the 30 Day ATMS Burn-In Test
3. Completion Notice
4. Compliance Certificate
5. Manufacturer's Equipment Documentation
6. As-Built Drawings with GPS locations

PART 2 PRODUCTS

2.1 NON-INTRUSIVE DETECTOR

A. State-Furnished: Contact the Engineer ~~Refer to UDOT Accepted Products List~~ for approved manufacturers and alternatives.

1. Radar: Wavetronix Smart-Sensor, Model SS125 (standard) or Model SS105 (in special conditions), approved equal, or as specified for vehicle counting. Wavetronix Smart-Sensor Advance, Model SS200, approved equal, or as specified for dilemma zone detection. Refer to Section 02892.
   a. Surge Protector: Wavetronix Click! 200 or approved equal
   b. 24 VDC NID Power Supply: Wavetronix Click! 201, Click! 202, Click!205 or approved equal
   c. Contact Closure Cards: Wavetronix Click! 100, 172 or 174, or approved equal
2. Video: Refer to Section 02892.
3. Acoustic: Use only where approved.

2.2 POLE

A. State-Furnished:

1. Luminaire Pole. Refer to Section 16525 and SL Series Standard Drawings.
2. CCTV Pole. Refer to Section 13556 and AT Series Standard Drawings.
3. Signal luminaire extension, vertical attachment, or arm. Refer to SL Series Standard Drawings.

2.3 MOUNTING EQUIPMENT

A. State-Furnished: NID Sensor Mount

B. All other mounting hardware necessary: AISI Type 316 Stainless Steel

2.4 CABLES AND CONDUCTOR

A. State-Furnished: NID Sensor Cable as required by manufacturer.

2.5 SURGE PROTECTOR ENCLOSURE ON POLE

A. State-Furnished Enclosure: Fiberglass NEMA 250 rated (Stahlin RJ1008HPL or approved equal), where required

PART 3 EXECUTION

3.1 PREPARATION

A. Notify the ~~ITS Project Manager~~ Engineer at least 14 calendar days before picking up the State-Furnished NID equipment to coordinate pickup location and time.

B. Load, transport, and install all State-Furnished materials per the manufacturer's instructions and as shown in the contract.

C. Deploy traffic control devices, personnel, or both. Refer to Section 01554.

3.2 INSTALL NON-INTRUSIVE DETECTOR (NID)

A. Furnish and install all items necessary to make the NID system complete and operational.

B. Install NID to ensure clear line of sight detection.

C. Mount and connect the NID at locations shown in this Section, article 2.2, ~~Pole,~~ as shown in the contract, and at the height and orientation specified by the NID manufacturer. Dilemma zone NID may be placed on signal mast arm.

D. Refer to the following for installation guidance:
   1. SSIG
   2. AT Series Standard Drawings
   3. SL Series Standard Drawings

E. NID Sensor Cable length less than ~~40~~ 100 ft from mounted detector to ATMS Cabinet: Install the NID Surge Protector and 24 VDC Power supply on DIN rail mounted to the ATMS Cabinet wall. Refer to Section 13555.

F. NID Sensor Cable length greater than ~~40~~ 100 ft from mounted detector to ATMS Cabinet:

1. Install NID Surge Protector in NEMA 250 Enclosure between NID device and ATMS Cabinet. Mount Enclosure on pole, luminaire extension, vertical attachment, arm, or mast arm, 10 ft above ground or higher.
2. Install additional NID Surge Protector in the ATMS Cabinet with the 24 VDC Power supply.

G. Clear equipment exterior of all loose rust and mill scale, dirt, oil, grease and other foreign substances.

3.3 INSTALL POLE

A. Refer to Section 16525, AT Series Standard Drawings, and SL Series Standard Drawings.

3.4 CABLES AND CONDUCTORS

A. Install all cables and conductors in conduit and poles per the contract.

B. Do not exceed the minimum bending radius or the maximum pulling tension recommended by the manufacturer's specifications at any time.

C. Keep cable ends sealed at all times during installation using an approved cable end cap. Do not use tape to seal the cable end. Keep cable ends sealed until connectors are installed.

D. Provide 6 ft of neatly coiled and bundled NID cable slack in all cabinets.

E. Make all NID cable connections between the NID and ATMS cabinet per the contract.

F. Arrange wiring neatly at cabinet, junction boxes, and fixtures.

3.5~~6~~ TESTING AND ACCEPTANCE

A. Successfully complete the following tests:

1. Cable and Conductor Test: Obtain UDOT's newest version (at time of bid) of the ATMS Cable and Conductor Test from the UDOT Web site. Refer to http://www.udot.utah.gov/go/standardsreferences~~http://www.udot.utah.gov/index.php/m=c/tid=719~~.
2. Local Field Operations Test: Obtain UDOT's newest version (at time of bid) of the Non-Intrusive Detector Local Field Operations Test form from

the UDOT Web site. Refer to http://www.udot.utah.gov/go/standardsreferences~~http://www.udot.utah.gov/index.php/m=c/tid=719~~.

a. Successfully conduct the following three tests:
   1) Detector Accuracy Verification Test: Volume
   2) Detector Accuracy Verification Test: Speed
   3) Detector Accuracy Verification Test: Occupancy

b. Conduct the Local Field Operations test after the Cable and Conductor test has been successfully completed and the Cable and Conductor Test Report has been approved by the Engineer.

c. Verify physical construction has been completed in accordance with the contract and that the connecting cabling has been properly installed.

d. Furnish all equipment, appliances, and labor necessary for the test.

3. Acceptance Tests: Refer to Section 13595.

END OF SECTION

SECTION 13594

FIBER OPTIC COMMUNICATION

PART 1 GENERAL

1.1 SECTION INCLUDES

A. Materials and procedures for installing and testing fiber optic communication systems.

1.2 RELATED SECTIONS

A. Section 13551: General ATMS Requirements

B. Section 13553: ATMS Conduit

C. Section 13554: Polymer Concrete Junction Box

D. Section 13555: ATMS Cabinet

1.3 REFERENCES

A. Electronic Industries Association (EIA) and Telecommunications Industry Association (TIA) Specifications

B. National Electrical Code (NEC)

C. Telcordia Guidance

D. Underwriters Laboratory (UL)

E. USDA Rural Electrification Administration (REA) Specifications

1.4 DEFINITIONS

A. OTDR: Optical Time Domain Reflectometer

B. OSP: Outside Plant

C. SMF: Single-mode fiber

~~D. Backbone: 72 SMF strands or greater~~

~~E. Distribution: 24 SMF to 71 SMF strands~~

~~F. Drop: 6 SMF to 23 SMF strands~~

1.5 SUBMITTALS

A. Provide all submittals in accordance with Section 13551.

B. Provide evidence of training and experience for all fiber optic staff, including but not limited to installation technician, splice technicians and test technicians.
   1. Include in the file for each technician the following:
      a. Resume listing relevant education and experience
      b. Certificate of completion for the fiber optic training course.

C. For approval:
   1. A detailed construction and installation procedure covering all aspects for the fiber optic cable installation on this project.
   2. All materials for the fiber optic cable installation on this project.
   3. Fiber labeling setup.

D. Submit OTDR test results to the Department in a neatly bound and printed format for acceptance. Include the current calibration certificate for the OTDR being used at the front of the documentation. Electronic submittal to Engineer on floppy disk or CD is also required. All Electronic files will be compatible with Siecor OTDR 383PCW Version 1.21 or higher.

E. Submit Power Meter/Light Source Test results to the Department for acceptance. Obtain the test form from the Department Fiber Representative.

PART 2 PRODUCTS

2.1 GENERAL

A. All materials are UL listed.

B. Provide all incidental materials including but not limited to fiber optic jumpers, cable ties, labels, ~~data cables,~~ and connectors.

C. All materials meet Fluid Penetration Test standards (TIA/EIA-455-82B).

2.2 FIBER OPTIC CABLE

A. Fiber must be approved by the USDA Rural Electrification Administration (PE-90).

B. The fiber optic cable is an Outside Plant (OSP) type, armored dielectric loose tube, single-mode cable.

C. Include the manufacturer's test documentation. This documentation indicates the attenuation of each cable fiber in dB/km, measured at 1310 nm and 1550 nm for single-mode.

D. Outside Plant (OSP) Single-mode.
   1. Fiber Optic Glass: Corning SMF-28E or approved equal.
   2. Gel-Free Fiber Optic Cable: Corning ALTOS Lite or approved equal.

E. Fiber optic cable must comply with Telcordia GR20-CORE and TIA/EIA-4720000-A.

F. Outer jacket labeling:
   1. The date of manufacture and the manufacturer's name.
   2. A numerical sequence, at intervals no greater than 10 ft, to determine the length of cable and amount of cable remaining on the reel.
   3. "UDOT Fiber Optic Cable" at an interval of no greater than 10 ft.
   4. Height of the markings is $^{1}/_{8}$ inch nominal.

G. Label and tag all fiber optic cables in every accessible location, 6 inches from the end plate on enclosures, using Panduit MP-150-C (or equivalent) with the following information:
   1. Span identification (provided on Department splice detail)
   2. Strand count
   3. Location
   4. Type of circuit (e.g., drop cable, distribution, and backbone)
   5. Example:

      Span ID= 2674
      48 ct SMFO
      Locate ID= 3500 So Distribution
      or
      Locate ID= Drop CCTV @ Main St & Center St

2.3 FIBER OPTIC CONNECTORS

A. With the following characteristics and as specified in the contract:

~~2~~1. ST – Connectors (Standard)

a. Factory installed or field installed ST or ST compatible connectors.

b. Ceramic ferrules and metallic connector bodies.

c. Maximum insertion loss: 0.30 dB.

d. Connector back reflection: greater than 35 dB.

~~1~~2. LC – Connectors (~~to be used~~use only where approved)

a. Factory installed prepolished or field installed camlock LC connectors.

b. Ceramic ferrules.

c. Maximum insertion loss: 0.30 dB.

d. Connector back reflection: greater than 35 dB.

B. Clean all connectors with alcohol wipes and a compressed cleaning gas.

C. Furnish and install new fan-out kits to replace any existing fan-out kits that must be severed to make fiber terminations.

D. Provide 3 ft nominal fan-out kits.

2.4 TYPE A AND B FIBER OPTIC CABLE SPLICE ENCLOSURE

A. Provide splice enclosures with the following minimum characteristics:

1. Comply with Telcordia GR-771
2. Corrosion resistant shell
3. Allow re-entry without replacing the cable seals

~~4. One 3-section end plate with 6 pre-molded cable entry ports~~

~~5. One blank end plate~~

~~6~~4. Hinged splice trays to provide easy access to splices on other trays

~~7~~5. Strength member tie-off

~~8~~6. Mechanism to resist cable pull-out

~~9~~7. All required accessories to complete the splice

B. Type A:

1. Accommodates up to 288 splices
2. Contains 2 or more 36-count splice trays

C. Type B: For locations with up to 48 splices.

1. Accommodates up to 48 splices
2. Contains 2 or more 12-count splice trays

2.5 SPLICE ENCLOSURE FIBER DETAILS

A. Provide 3 ft of buffer tube slack from end plate.

B. Provide label for each buffer tube located 1 inch from the splice tray. Description on label will identify as to which fiber cable and direction cable is coming from.

C. Provide 3 to 4 ft of fiber optic strands, outside of buffer tube, from each cable before splicing.

PART 3 EXECUTION

3.1 INSTALLERS

A. Complete a three-day course on the installation, splicing, and testing of fiber optic cable.
   1. Course: conducted by the supplier of the fiber optic product or established education provider.
   2. In house and on the job training are not acceptable.

B. Demonstrate two years total and one year continuous work experience with the splicing, termination, and testing of fiber optic cable.

C. Perform all work with qualified staff.

3.2 FIBER OPTIC CABLE INSTALLATION REQUIREMENTS

A. Do not perform fiber splices that are not shown in approved splice details without prior written authorization from UDOT ITS Fiber Division located at the UDOT Traffic Operation Center, 2060 S., 2760 W., Salt Lake City.

B. Splice all drop cables to the main run of fiber with a mid span entry to the cable, unless described differently in the contract.

C. Notify the Engineer five business days in advance of fiber optic cable installation into any existing conduit, ATMS site, or building facility.

D. The Engineer may initiate special inspection procedures to verify the condition of existing communications facilities. Observe inspections as desired.

E. Perform all work in facilities on conduits, junction boxes, cabinets, and buildings containing the Department's existing equipment only in the presence of the Department’s representative.
   1. Refer to Section 13553 for conduits
   2. Refer to Section 13554 for junction boxes.
   3. Refer to Section 13555 for cabinets.

F. Restore Contractor damaged facilities within 48 hours.

G. Lubricate cable with a lubricant designed for fiber optic cable installation. Use the following minimum lubricant quantity for each cable pull:

$$Q = 0.0008 * D * L$$

Where: Q = the quantity of lubricant (gallons)
D = the diameter of the conduit (inches)
L = the length of the pull (feet)

H. Use shear pins or other failsafe means to prevent exceeding the maximum cable pulling tension specified by the cable manufacturer.

I. Maintain the following minimum bend radii:
1. 20 times Cable Diameter during installation.
2. 10 times Cable Diameter installed.

J. Provide the following minimum slack ~~requirements~~:
1. Junction Boxes with Splice Points: 35 ft from installed splice case to conduit on all cables.
2. Type II and III Polymer Concrete Junction Boxes without Splice Points: 80 ft.
3. Cabinets and all other junction boxes: 15 ft.

K. The Department will not pay for additional slack provided in excess of the minimum specified.

~~J. Maintain the following minimum slack requirements:~~
~~1. Splice Points: 35 ft from installed splice case to conduit on all cables~~
~~2. All Other Junction Boxes: 15 ft.~~
~~3. Cabinets: 15 ft.~~

L~~K~~. Replace any fiber optic cable segment not meeting the requirements of the specifications in its entirety between full splice points ~~shown in the contract~~.

3.3 FIBER OPTIC CABLE PREPARATION

A. Solvent requirements:
1. Must not remove any color from individual fibers (Refer to TIA/EIA-598-A) or buffer tubes.
2. Not harmful to the polyethylene cable jacket.

3.4 ENTRY AND REENTRY OF FIBER OPTIC SPLICE ENCLOSURES

A. Perform all work in an environmentally controlled atmosphere. Acceptable environments to work on splice enclosures include office type environments in buildings, splice trailers, and splicing tents with floors. All splicing, testing, connecting, or opening of fiber ends must not occur in locations with freezing temperatures, rain, snow, or wind-blown dust.

3.5 FUSION SPLICING

A. For all fiber splicing, use fusion splice method.

B. Perform fusion splices as follows:
   1. Use equipment with automatic fiber alignment and automatic light injection with detection devices or profile alignment algorithms to estimate splice losses.
   2. Provide splice enclosure as a protection for all splices and stripped cable.
   3. House all splices in splice trays or organizers.
   4. Use glass capillaries, heat shrink tubing, or silicone sealant to provide additional protection and strain relief.
   5. Comply with maximum splice loss allowance of 0.05 dB.

C. Install new splice enclosure end plates per manufacturer's recommendations at each location where there is a new fusion splice in an existing splice enclosure.

~~3.6 CABLE LABELING REQUIREMENTS~~

~~A. Label all fiber optic cables in every accessible location with a high quality permanent label, indicating the street name or location and type of circuit (e.g., drop cable, distribution, and backbone-96 count).~~

~~B. Use Panduit MP-150-C or equivalent.~~

3.6~~7~~ ACCEPTANCE TESTING

A. Contact the Engineer five business days before performing all acceptance testing (Post Termination and Splicing OTDR and Power Meter).

B. Perform all fiber optic testing with an OTDR capable of producing output files compatible with the Siecor OTDR 383PCW Version 1.21 or higher.

~~C. Repair any damaged fiber strands using fusion splicing methods and repeat all tests described below.~~

~~D~~C. OTDR Testing Requirements:

1. After completing the required work, test every fiber strand passing through any open splice tray.
2. Conduct all traces with a pigtail or fiber box between the OTDR and the fiber under test. Use pigtail of sufficient length as to show the connector, or the start of the strand under test.
3. Do not exceed launch transition of 0.6 dB.
4. Conduct all traces at both 1310 nm and 1550 nm.
5. Unless otherwise noted, uni-directional traces are acceptable.
6. Provide traces with the following information:
   a. Horizontal Axis: Distance in Feet and Kilometers.
   b. Vertical Axis: Attenuation scale in dB.
   c. Traces showing attenuation versus distance.
   d. Cursors positioned at cable ends.
7. Tabulate for each trace: method, fiber type, wavelength, pulse width, refractive index, range, search threshold, reflection threshold, end threshold, warning threshold, backscatter, jumper length, file date, file time, fiber ID, cable ID, OTDR location, far end location, operator initials.
8. Provide an event table showing all events having more than 0.05 dB loss, containing event type, position from OTDR end, loss and reflectance.
9. For cables less than 3300 ft (1 km) in length, the maximum total allowable attenuation is 1.0 dB.
10. Identify fibers by strand number.
11. Submit results in printed form on 8 ½-inch x 11-inch paper in a suitable binder organized by cable and strand number.
12. A cover sheet is required for each binder indicating which cable(s) were tested, the OTDR users name, the reviewers name, the type of test performed and the date(s) of the test.
13. Cover sheets for final test results bearing the reviewers signature, the date, and a statement indicating that the installation complies with the requirements of this section is required.
14. The Contractor's employee who has reviewed the traces is required to sign or initial them. A check mark is required on all traces that satisfy the requirements identified herein. For intermediate test results, flag any discrepancies that may exist with a short description of the proposed corrective action (e.g. resplice).
15. Submit to the Engineer on ~~3½ inch floppy disk or CD electronic~~digital media with a printed index.

D~~E~~. Post Installation / Pre-Splicing Test:

1. Fibers Tested: Normally, one strand per buffer tube. Test every strand when evidence of physical damage, excessive pulling tension, and kinks exist, or when any damaged strand is found.
2. Light Frequency: 1310 nm and 1550 nm.
3. Direction: Uni-directional.

4. Location of test: One field location for each cable installed.
5. Test after installing cable in duct but before splicing.
6. Tested by: Qualified Staff.
7. Witnessed/Approved by: Department inspector may witness and must approve before splicing.
8. Acceptance Criteria:
   a. Cable attenuation 0.4 dB/km at 1310 nm.
   b. Cable attenuation 0.25 dB/km at 1550 nm.
   c. Strand lengths are consistent.
   d. Launch Transition < 0.6 dB.
   e. No event > 0.10 dB.
9. Trace available for one strand in every buffer tube in the cable.

~~F~~E. Post Termination and Splicing Test:
1. Test every strand in all cable segments including connectorized strands of drop cables.
2. Light Frequency: 1310 nm and 1550 nm.
3. Direction: Unidirectional.
4. Location of test: Every field location required to obtain access to each cable segment.
5. Test after terminating and splicing at all points described in the contract.
6. Cable Tested by: Certified Staff.
7. Department inspector witnesses and approves before final approval by the Engineer.
8. Acceptance Criteria:
   a. Cable attenuation 0.4 dB/km at 1310 nm excluding splices described in the contract or authorized by the Engineer.
   b. Cable attenuation 0.25 dB/km at 1550 nm excluding splices described in the contract or authorized by the Engineer.
   c. Strand lengths are consistent.
   d. Launch Transition < 0.6 dB.
   e. No event > 0.30 dB.
   f. Maximum splice attenuation 0.05 dB per splice unless otherwise described in the contract.
9. Trace available for each strand in all cable segments.

~~G~~F. Power Meter/Light Test:
1. Connect the light source to the connectorized fiber at the location identified on the Fiber Optic Light Source Power Meter Test Form provided by the Resident Engineer or Department Fiber Representative at the pre-construction meeting. Connect a power meter to the other end of the fiber at the location identified on the Test Form. Record the results and submit the completed form to the Engineer.
2. Use the light frequencies of 1310 nm and 1550 nm, or as indicated in test forms.

3. Perform the test bi-directional.
4. Test every field location required to obtain access to each cable segment.
5. Perform all testing using a qualified staff member.
6. A Department inspector witnesses and approves the results before final approval by the Engineer.
7. Acceptance Criteria:
   a. Cable attenuation as called for in test plans.
   b. Test is available for each strand indicated in test plans. Otherwise, test will be available for each strand in each cable segment.

~~H~~G. All work to conform to the NEC.

END OF SECTION

AT 1 through AT 13
Drawing Comment Resolution Log

UDOT, FHWA, Suppliers

JL = John Leonard
RS = Roland Stanger (FHWA)
Robert Miles
Mark Taylor
TMD = ITS Standards Group, see note
Jason Richins
Boyd Wheeler
Tyler Yorgason (ACEC)
Degen Lewis
Mike Xiras
Larry Montoya

TransCore

Dwayne Fontaine
Aaron Cloward
Todd Mac Gillvray
Gerard Kies
Aaron Buchanan
Jonathan Turner

Response Code Legend

A - Add or Correct
B - Clarify or Evaluate
C - Additional Information Needed
D - Not Cost Effective / Preference
E - Disagree
F - Delete Comment

ID #	Sheet #	Comment made by:	Comment Date	Comment	Response Code	Response
1	**AT-1**			**Legend Sheet**		
2	AT-1	Jason Richins	7/30/2007	Type II Polymer Concrete Junction Box Symbol is Bold when the others aren't.	A	Comment Incorporated
3	AT-1	Todd M	5/1/2007	In Abbreviations, place "REQ'D" above "RMS"	A	Comment Incorporated
4	AT-1	Todd M	7/23/2007	In Equipment Type, add space to "MASTARM"	A	Comment Incorporated
5	AT-1	Todd M/ Robert M	7/23/2007	Insert Abbreviation: BNC - Bayonet Neil-Concelman	A	Comment Incorporated
6	AT-1	Todd M	7/23/2007	Insert Abb: HAR - Highway Advisory Radio	A	Comment Incorporated
7	AT-1	Todd M/ Robert M	7/23/2007	Insert Abb: RDPE - Remote Data Port Enclosure	A	Comment Incorporated
8	AT-1	Todd M	7/23/2007	Add: Under REVISIONS, "2. Added Abbreviations"	A	Comment Incorporated
9	**AT-2**			**Ramp Meter Details**		
10	AT-2	Robert Miles	5/1/2007	For detail C, per which standard drawing?	F	Per the MUTCD, not a standard drawing, if I understand this right.
11	AT-2	Robert Miles	5/1/2007	For note 6, clear zone for which stream of traffic?	F	For the ramp meter traffic.
12	AT-2	Mark Taylor	4/23/2007	Add note: Install upper three-section (12" red, yellow, and green lenses) and lowere two or three-section heads (8" lenses) as shown. Use a two-section lower head for"1 vehicle per green each lane" output and a three-section lower head for "2 vehicles per green each lane" output.	A	Note Added
13	AT-2	Mark Taylor	4/23/2007	Add note: Use four conductors for each signal head.	A	Note Added
14	AT-2	Mark Taylor	4/23/2007	Add note: Use Type I signal head on ramp meter mast arem (red, yellow, and green)	A	Note Added
15	AT-2	Mark Taylor	4/23/2007	On detail A replace two-section signal heads on mast arms with three-section signal heads	A	Comment Incorporated
16	AT-2	Mark Taylor	4/23/2007	On detail B the Top signal head should be three section head	A	Comment Incorporated
17	AT-2	Mark Taylor	4/23/2007	On detail B the lower signal head should be a two or three section head, as per note 7	A	Comment Incorporated
18	AT-2	Mark Taylor	4/23/2007	On detail C remove the flashing lights detail from the top of the sign	A	Comment Incorporated
19	AT-2	Mark Taylor	4/23/2007	On detail C replace "metering when flashing" sign with a "meter on" blankout sign	A	Comment Incorporated

AT 1 through AT 13
Drawing Comment Resolution Log

UDOT, FHWA, Suppliers

JL = John Leonard
RS = Roland Stanger (FHWA)
Robert Miles
Mark Taylor
TMD = ITS Standards Group, see note
Jason Richins
Boyd Wheeler
Tyler Yorgason (ACEC)
Degen Lewis
Mike Xiras
Larry Montoya

TransCore

Dwayne Fontaine
Aaron Cloward
Todd Mac Gillvray
Gerard Kies
Aaron Buchanan
Jonathan Turner

Response Code Legend

A - Add or Correct
B - Clarify or Evaluate
C - Additional Information Needed
D - Not Cost Effective / Preference
E - Disagree
F - Delete Comment

ID #	Sheet #	Comment made by:	Comment Date	Comment	Response Code	Response
20	AT-2	Jason Richins	7/30/2007	Notes in B & C - Does MUTCD give good directions to location of signs? I don't have one to check.	B	Yes, see Section 2A.
21	AT-2	Mark T	4/23/2007	Add Note: "Install upper three section…"	A	Comment Incorporated
22	AT-2	Mark T	4/23/2007	Add Note: "Use four conductors…"	A	Comment Incorporated
23	AT-2	Mark T	4/23/2007	Add Note: "Use Type I Signal Head…"	A	Comment Incorporated
24	AT-2	TMD	8/3/2007	On Note 6, Modify: "Place Ramp Meter Mast Arm Assembly [a minimum of] 1.2 times…"	A	Comment Incorporated
25	AT-2	TMD	8/3/2007	On Note 7, change occurrances of lenses to LEDs	A	Comment Incorporated
26	AT-2	Todd M	8/8/2007	Change sign in C labeled as B-AT 3A to W3-3 36"x36"	A	Now that the sign is deleted, new ref was needed. See RS/JL comments.
27	AT-2	Todd M	8/3/2007	Change "crown of roadway" to "center of ramp" per MUTCD Section 4H.02	A	Comment Incorporated
28	AT-2	Mark Taylor	8/3/2007	In note 11 change Region Traffic Engineer to "Traffic Management Division"	A	Comment Incorporated
29	AT-2	RS/JL	8/8/2007	Having three different sets of notes is confusing. Combine into one set, and revise note call outs accordingly.	A	Comment Incorporated
30	AT-2	RS/JL	8/8/2007	Note 5, left side: Add to the end of the sentence "not shown on this STD DWG."	F	Comment doesn't make sense.
31	AT-2	RS/JL	8/8/2007	Three lane configuration, dual indication is required as per FHWA memo.	B	Dual indication is given for the single and dual lane ramps. The middle lane of a three lane configuration does not have dual indication for now and is under evaluation.
32	AT-2	RS/JL	8/8/2007	On detail B AT2, add 'MAX' to the 2" dimension between signs.	A	Comment Incorporated
33	AT-2	RS/JL	8/8/2007	Consider placing a rear side indication for each individual lane for enforcement.	B	Under evaluation.
34	AT-2	RS/JL	8/8/2007	if the sign in Detail c AT2 is to be used on the cross road, information must be added to the blank out sign by way of an auxilliary plaque indicating that it is for the freeway ramp (ie, N-BND RAMP)	B	Under evaluation. This may change back to having advance warning at the base of the ramp instead of the cross street-- in which case the auxiliary plaque will not be needed. If it stays the same, we'll get it added.
35	AT-2	RS/JL	8/8/2007	Define placement of the sign in comment 6 for the cross street, one for each direction. See comment 11 as well	B	see AT 3A. Under evaluation if more is needed from what has been added.
36	AT-2	RS/JL	8/8/2007	On detail C AT2, Change 'MIN' to 'MAX' to the 2" dimension between signs.	A	Comment Incorporated
37	**AT-3A and 3B**			**Ramp Meter Sign Panel**		
38	AT-3A	Mark T	4/23/2007	Change Detail A to a "Meter On" blankout sign detail	A	Comment Incorporated

AT 1 through AT 13
Drawing Comment Resolution Log

UDOT, FHWA, Suppliers

JL = John Leonard
RS = Roland Stanger (FHWA)
Robert Miles
Mark Taylor
TMD = ITS Standards Group, see note
Jason Richins
Boyd Wheeler
Tyler Yorgason (ACEC)
Degen Lewis
Mike Xiras
Larry Montoya

TransCore

Dwayne Fontaine
Aaron Cloward
Todd Mac Gillvray
Gerard Kies
Aaron Buchanan
Jonathan Turner

Response Code Legend

A - Add or Correct
B - Clarify or Evaluate
C - Additional Information Needed
D - Not Cost Effective / Preference
E - Disagree
F - Delete Comment

ID #	Sheet #	Comment made by:	Comment Date	Comment	Response Code	Response
39	AT-3A	Mark T	4/23/2007	Change Detail D from original AT3 to Detail B and change Sign to W3-3 (three-section head)	A	Comment Incorporated
40	AT-3A	Jason Richins	7/30/2007	For "METER ON" sign detail "x" and "y" seem to be reversed. X is usually horizontal, y verticle. Where they are shown on the sign "x" looks verticle and "y" looks horizontal.	A	Comment Incorporated
41	AT-3A	Jason Richins	7/30/2007	Widen the cell in the vertical direction that has the "LETTER POSITIONS (X)". The "Y" and "HT" are hard to see, because of the thick border touching both items.	A	Comment Incorporated
42	AT-3A	Mark T	4/23/2007	Add Note: "'Meter On' is a blnakout sign placed on perpendicular sheet (both directions) located as close to ramp as possible"	A	Comment Incorporated
43	AT-3A	TMD	8/3/2007	Modify: Background type: Non-reflective, Background color: Black	A	Comment Incorporated
44	AT-3A	Mark T	8/8/2007	Add Note: "Place in area that provides enough decision time to use the ramp"	A	Comment Incorporated
45	AT-3A	RS/JL	8/8/2007	Do not need detail for W3-3 sign. It is a standard MUTCD sign, and is in the Standard Highway Signs Manual.	A	Comment Incorporated
46	AT-3A	RS/JL	8/8/2007	Define the color of the legend on the 'METER ON BLANKOUT' sign.	A	Comment Incorporated
47	AT-3A	TMD	8/3/2007	Add: Legend type: Non-reflective, Legend color: Yellow	A	Comment Incorporated
48	AT-3A	RS/JL	8/8/2007	There is minor guidance on positioning the blank out sign, but 'as close to ramp as possible' does not address queuing, or give the motorist adequate time to maek an informeted decision. Additionally, there is a large number of trailblazer and destination signin in the vicinity of the ramp, and spacing is critical. This needs to be thought out and a generic design provided,	B	Under evaluation. ID#44 was added in response for now.
49	AT-3B	Jason Richins	7/30/2007	Same comment as # 3 above. Maybe move the "Y" to lower left corner with the "X" and put them by the correct axis.	A	Comment Incorporated
50	AT-3B	RS/JL	8/8/2007	EM font is generally reserved for large freeway guide signs. Series D on larger and Series C on smaller signs is more appropriate.	B	Under evaluation. TMD likes font size as is.
51	AT-3B	RS/JL	8/8/2007	On all four sign call outs, the background is 'retro'reflective.	A	Comment Incorporated
52	AT-3B	RS/JL	8/8/2007	Assign each of the signs a number, probably a RS10-22a and RS10-22b for the small 1 and 2 vehicle signs, and RS10-23a and RS10-23b for the large 2 vehicle signs.	A	Comment Incorporated

AT 1 through AT 13
Drawing Comment Resolution Log

UDOT, FHWA, Suppliers

JL = John Leonard
RS = Roland Stanger (FHWA)
Robert Miles
Mark Taylor
TMD = ITS Standards Group, see note
Jason Richins
Boyd Wheeler
Tyler Yorgason (ACEC)
Degen Lewis
Mike Xiras
Larry Montoya

TransCore

Dwayne Fontaine
Aaron Cloward
Todd Mac Gillvray
Gerard Kies
Aaron Buchanan
Jonathan Turner

Response Code Legend

A - Add or Correct
B - Clarify or Evaluate
C - Additional Information Needed
D - Not Cost Effective / Preference
E - Disagree
F - Delete Comment

ID #	Sheet #	Comment made by:	Comment Date	Comment	Response Code	Response
53	**AT 4**			**Ramp Meter Sign Panel**		
54	AT 4	Jason Richins	7/30/2007	Numbers 20 and 21 need to be switched or it will be red, green, yellow instead of red, yellow, green.	A	Comment Incorporated
55	AT 4	Jason Richins	7/30/2007	14 isn't shown, do you want to have "(Not Shown)" next to it?	B	Not yet, this may change again soon.
56	AT 4	Mark T	4/23/2007	Add Note: "Use a two-section lower head…"	A	Comment Incorporated
57	AT 4	Mark T	4/23/2007	Add Note: "Use four conductors for each signal head"	A	Comment Incorporated
58	AT 4	Todd M	4/23/2007	Insert #17 on legend "Signal head - Yellow LED, 12""	A	Comment Incorporated
59	AT 4	Mark T	4/23/2007	Add Note: 1. Use lower signal head only on single…"	A	Comment Incorporated
60	**AT-5**			**Ramp Meter Loop Installation**		
61	AT-5	Jason Richins	7/30/2007	On the HV2 & LV2 conduit lines on all three details it appears that the lines are broke. I would suggest you not break them in this case. It looks like a breaker should be there. If a breaker, fuse or switch is supposed to be there the right symbol needs to be used. (*It might be my fonts on my reader also*).	A	Comment Incorporated
62	AT-5	Mark T		On all drawings, alter 10' and 3' to 7' and 6' respectively	A	Comment Incorporated
63	AT 5	TMD	8/3/2007	On Note 6, Modify: "Place Ramp Meter Mast Arm Assembly [and cabinet a minimum of] 1.2 times…"	A	Comment Incorporated
64	AT-5	Todd M	8/8/2007	Place cabinet on right side of traffic, unless space is unavailable. Cabinet on left size must meet clear zone requirements for mainline and ramp	A	per JL/RS comment
65	AT-5	RS/JL	8/8/2007	Note 6, add 'and cabinet' after 'Mast Arm Assembly'.	A	per JL/RS comment
66	AT-5	RS/JL	8/8/2007	Show cabinet on the right side in the detail drawings. Note that when it is placed on the left side, it must be out of the mainline clear Zone.	B	Will probably make this change on detail B after getting clearance from TMD.
67	AT-5	RS/JL	8/8/2007	Ramp meter stop bar should be outside the clear zone of the mainline traffic (stopped condition = hazard)	B	We'll consider adding a note.
68	AT-5	RS/JL	8/8/2007	In detail D AT5, what is 'L'? L is generally used for taper lengths. Also, consider using a different call out letter than 'L'.	A / B	Usually depends on speed. Under evaluation.

AT 1 through AT 13
Drawing Comment Resolution Log

UDOT, FHWA, Suppliers

JL = John Leonard
RS = Roland Stanger (FHWA)
Robert Miles
Mark Taylor
TMD = ITS Standards Group, see note
Jason Richins
Boyd Wheeler
Tyler Yorgason (ACEC)
Degen Lewis
Mike Xiras
Larry Montoya

TransCore

Dwayne Fontaine
Aaron Cloward
Todd Mac Gillvray
Gerard Kies
Aaron Buchanan
Jonathan Turner

Response Code Legend

A - Add or Correct
B - Clarify or Evaluate
C - Additional Information Needed
D - Not Cost Effective / Preference
E - Disagree
F - Delete Comment

ID #	Sheet #	Comment made by:	Comment Date	Comment	Response Code	Response
69	**AT-6**			**Conduit Details**		
70	AT-6	Jason Richins	7/30/2007	On all three details the warning tape is 6" down. It is double dimensioned and one is "6" MIN." and one is 6", which one do you want? I like the 6" min. but it isn't my decision.	A	Comment Incorporated
71	AT-6	Jason Richins	7/30/2007	NOTE 2 - Open-graded surface course (OGSC) is usually only used for the top 1" of asphalt. You may want to check with a pavement engineer to see if they want a dense grade mix instead. OGSC is very porous and I don't think you want water to penetrate into your trench.	A	Comment Incorporated
72	AT-6	Robert M	5/1/2007	Include OGSC in pavement Thickness	B	Evaluating
73	AT-6	Todd M	8/3/2007	Edit note 2 to read "…Use open-graded surface course [for the top 1" of HMA] for patches greater than 12 feet wide…"	A	Per Jason's comment
74	**AT-7**			**Polymer-Concrete Junction Box Details**		
75	AT-7	Gerard		Remove min and max and specify exact PVC and HDPE penetrations; 2" PVC and 6" HDPE	A	Comment Incorporated
76	AT-7	Robert M	5/1/2007	Blockout the hatching dimensions (1" and 12") to make more visible	A	Comment Incorporated
77	AT-7	TMD	8/3/2007	At the end of note 4, append "…except where surrounded by concrete"	F	TMD changed mind
78	AT-7	TMD	8/3/2007	On junction box concrete collar detail, change far left dimension from 8" to 6"	A	Comment Incorporated
79	AT-7	Todd M	8/3/2007	On junction box concrete collar detail, change to " 1/2" preformed expansion joint filler trimmed flush with both surfaces"	A	Comment Incorporated
80	AT-7	Larry Montoya	8/8/2007	Look into specifying a maximum distance to embed the ground rod so contractor installs it.	A	Using 4" max.
81	AT-7	Todd M	8/8/2007	Append "and 1 1/2" min clr per AT 6" after "flowable fill…" note to specify limits of flow fill in the third dimension.	A	Comment Incorporated
82	**AT-8**			**ATMS Cabinet**		
83	AT-8	Todd M		Remove box in lower-right corner "Supplemental Drawing"	A	Comment Incorporated

AT 1 through AT 13
Drawing Comment Resolution Log

UDOT, FHWA, Suppliers

JL = John Leonard
RS = Roland Stanger (FHWA)
Robert Miles
Mark Taylor
TMD = ITS Standards Group, see note
Jason Richins
Boyd Wheeler
Tyler Yorgason (ACEC)
Degen Lewis
Mike Xiras
Larry Montoya

TransCore

Dwayne Fontaine
Aaron Cloward
Todd Mac Gillvray
Gerard Kies
Aaron Buchanan
Jonathan Turner

Response Code Legend

A - Add or Correct
B - Clarify or Evaluate
C - Additional Information Needed
D - Not Cost Effective / Preference
E - Disagree
F - Delete Comment

ID #	Sheet #	Comment made by:	Comment Date	Comment	Response Code	Response
84	AT-8	Robert M	5/1/2007	Orientation Looks Different from Planview	E	
85	AT-8	TMD	8/3/2007	Alter Dimensions in Plan View: Indicate 10" spacings at top and bottom, change 45" to 60" (bottom right) and 60" to 72" (top right) and adjust accordingly as well on side elevation	A	Comment Incorporated
86	AT-8	TMD	8/3/2007	Under concrete (side elevation), indicate "Compact to 90% under concrete (typ.)	A	Comment Incorporated
87	**AT-9**			**ATMS Cabinet Disconnect and Transformer Frame**		
88	AT-9	Todd M		in DWG A, Change "Galvanized Bolt" to "Galvanized Steel Nuts, Bolts, and Washers	A	Comment Incorporated
89	AT-9	Aaron C		Add: Under Notes, Indicate "Spray Galvanize Cut Ends of Framing Struts"	A	Comment Incorporated
90	AT-9	Todd M		Add Dimensions 6" and 30" on schematic B	A	Comment Incorporated
91	AT-9	Todd M		Change 2" Rigid Metal Conduit to GRC	A	Comment Incorporated
92	AT-9	Todd M		Change Framing Strut to 1 5/8" x 1 5/8" min. Galvanized Steel U-strut (TYP) on both schematics	A	Comment Incorporated
93	AT-9	Todd M		Indicate Galvanized Steel Cap (TYP) atop both schematics	A	Comment Incorporated
94	AT-9	Robert M	5/1/2007	What is a framing strut? What is it made of? Type of Connection?	A	Comment Incorporated
95	**AT-10**			**CCTV Mounting Details**		
96	AT-10	Aaron B	4/23/2007	Remove call out for the access panel. This is already shown on AT11	F	
97	AT-10	Bill B		Add note saying to "position arm on side of pole facing traffic" to details B and C.	A	Comment Incorporated
98	AT-10	Robert M	5/1/2007	Define acronyms on AT 1.	A	EPP is not an acronym. UTP, TX, and RX are standard electrical terms. RDPE is the only one that is an unusual acronym, but comes with the state furnished cameras.
99	AT-10	Gerard	5/1/2007	Are the gel-filled splice enclosures still approved?	B	yes, but we need to verify spec has information on it.
100	AT-10	Gerard	5/1/2007	The arms in Detail B and C should "be angled per engineers direction".	F	

AT 1 through AT 13
Drawing Comment Resolution Log

UDOT, FHWA, Suppliers

JL = John Leonard
RS = Roland Stanger (FHWA)
Robert Miles
Mark Taylor
TMD = ITS Standards Group, see note
Jason Richins
Boyd Wheeler
Tyler Yorgason (ACEC)
Degen Lewis
Mike Xiras
Larry Montoya

TransCore

Dwayne Fontaine
Aaron Cloward
Todd Mac Gillvray
Gerard Kies
Aaron Buchanan
Jonathan Turner

Response Code Legend

A - Add or Correct
B - Clarify or Evaluate
C - Additional Information Needed
D - Not Cost Effective / Preference
E - Disagree
F - Delete Comment

ID #	Sheet #	Comment made by:	Comment Date	Comment	Response Code	Response
101	AT-10	Bill B	5/15/2007	Add Dip Switch settings for the positioner and dome camera. Call them Esprit and Spectra III.	A	Sheet AT 10B has been created with these details
102	AT-10	Matt S	5/22/2007	What is the symbol used in the lower left corner of the wiring diagrams? Shouldn't it be something else or called out what it is?	A	Comment Incorporated
103	AT-10	Todd M	7/24/2007	Split Sheet AT10 to pages AT10A and AT10B	A	additional items for sheet 10 required the sheets to be split into 10A and 10B
103	AT-10A	Jason Richins	7/31/2007	All of the Arrow heads look big. Arrow head width is 1 times the active text size and height is .5 times the active text size, as per our Guide for the Development of Plan Sheets.	A	Comment Incorporated
104	AT-10A	Todd M		Change All References for AT 10 to AT 10A	A	Comment Incorporated
105	AT-10A	Bill B		Clarify schematics D & E as Esprit and Spectra III, respectively	A	Comment Incorporated
106	AT-10A	Grant Jackson	8/1/2007	Where it says to drill a 1" hole: Could we change this to a threaded bushing? Possibly steel. This would help the bushing stay in place, Also it would help protect the wires if the mount came lose rotated and pinch the wires	B	It would be nice if this could be done, but it's not possible to tap a threaded hole on the rounded surface where specified. This would require changing the specs of the poles coming to us from Valmont, since this would have to be done during manufacturing.
107	AT-10A	Aaron C	8/7/2007	At bottom of figures D&E, change from 16 to 12 AWG WHT, 12 AWG GRN, 12 AWG BLK	A	Comment Incorporated
108	AT-10A	Aaron C	8/7/2007	Add in surge and data supression to drawing D & E (above 12 AWG WHT and left of 20 AWG BLK)	A	Comment Incorporated
109	AT-10A	Aaron C	8/7/2007	At bottom of figures D&E, flip cord cap to face other direction (contractor provided)	A	Comment Incorporated
110	AT-10A	Jason Richins	8/3/2007	Reduce size of arrow heads to meet this criteria: 1x of active text size = width, 0.5x of active text size = height	A	Comment Incorporated
111	AT-10A	Aaron C	8/7/2007	Edit figures B and C to say at bottom "Position arm so camera points to the center of the intersection"	A	Comment Incorporated
112	AT-10A	Aaron C	8/3/2007	Add in video suppression just left of RG59 Coax On figure D	A	Comment Incorporated
113	AT-10B	Todd M		Properly label drawings as "A" and "B"	A	Comment Incorporated
114	AT-10B	Todd M		Change Title to "CCTV Settings"	A	Comment Incorporated
115	AT-10B	Bill B		Change Note to "Set Esprit Power Supply to 115 VAC. Power Supply located in base of camera"	A	Comment Incorporated

AT 1 through AT 13
Drawing Comment Resolution Log

UDOT, FHWA, Suppliers

JL = John Leonard
RS = Roland Stanger (FHWA)
Robert Miles
Mark Taylor
TMD = ITS Standards Group, see note
Jason Richins
Boyd Wheeler
Tyler Yorgason (ACEC)
Degen Lewis
Mike Xiras
Larry Montoya

TransCore

Dwayne Fontaine
Aaron Cloward
Todd Mac Gillvray
Gerard Kies
Aaron Buchanan
Jonathan Turner

Response Code Legend

A - Add or Correct
B - Clarify or Evaluate
C - Additional Information Needed
D - Not Cost Effective / Preference
E - Disagree
F - Delete Comment

ID #	Sheet #	Comment made by:	Comment Date	Comment	Response Code	Response
116	**AT-11**			**CCTV POLE AND NID MOUNTING DETAILS**		
117	AT-11	Todd M		Take AT-11 and break it into 11A and 11B. 11A will have one camera lowering pole without attachments, the other will have all possible attachments per the agency contract specs. 11B will have the current non-lowering pole and NID pole.	A	Comment Incorporated
118	AT-11	Aaron B	4/23/2007	Replace Detail A with a camera lowering pole. Add details for a optional dish antenna and options for both dome and positioner cameras.	A	Comment Incorporated
119	AT-11	Aaron B	4/23/2007	Remove NID from details A and B, it should only be on detail C.	A	Comment Incorporated
120	AT-11	Todd M	4/23/2007	Show pole mounted cabinet as optional and add note to clarify.	A	Comment Incorporated
121	AT-11	Todd M	4/23/2007	Add note about no contact between lowering cables and other cables.	A	Comment Incorporated
122	AT-11	Aaron B	4/23/2007	Make detail C applicable for both CCTV pole and luminaire mounting.	A	Comment Incorporated
123	AT-11	Gerard	5/1/2007	Add note to angle camera lowering arm per engineers instruction	A	The handhole for camera lowering poles should be directly under the lowering arm. The other handholes should face away from traffic.
124	AT-11	Gerard	5/1/2007	Show direction of handholes	A	Comment Incorporated
125	AT-11	Bill B	5/22/2007	Check "Pre-drilled neoprene gromet/watertight cable clamp"	B	All holes drilled into the pole should be plugged after work is done so that no water can enter.
126	AT-11	Bill B	5/22/2007	What "does plug and seal all openings into pole" mean?	F	
127	AT-11	Mike X	5/22/2007	The camera lowering system has to provide a 24 V Transformer in the arm. Ask the manufacturer about this	A	Comment Incorporated
128	AT-11	Jason Richins	7/31/2007	Arrow heads.	A	Comment Incorporated
129	AT-11	Todd M		Redirect Arrow for Hand Hole (schem. A)	A	Comment Incorporated
130	AT-11	Todd M		Add Note: "Do not mount dome cameras on luminaire poles"	A	Comment Incorporated per Bill B
131	AT-11	Jason Richins	7/31/2007	Check arrow head sizes on drawings	A	Comment Incorporated
132	AT-11	TMD	8/3/2007	On dwg C, change "mounting height per…" to "mounting height per manufactured specifications or as otherwise specified"	A	Comment Incorporated
133	**AT-12**			**CCTV Pole Foundations For CCTV Poles**		

AT 1 through AT 13
Drawing Comment Resolution Log

UDOT, FHWA, Suppliers

JL = John Leonard
RS = Roland Stanger (FHWA)
Robert Miles
Mark Taylor
TMD = ITS Standards Group, see note
Jason Richins
Boyd Wheeler
Tyler Yorgason (ACEC)
Degen Lewis
Mike Xiras
Larry Montoya

TransCore

Dwayne Fontaine
Aaron Cloward
Todd Mac Gillvray
Gerard Kies
Aaron Buchanan
Jonathan Turner

Response Code Legend

A - Add or Correct
B - Clarify or Evaluate
C - Additional Information Needed
D - Not Cost Effective / Preference
E - Disagree
F - Delete Comment

ID #	Sheet #	Comment made by:	Comment Date	Comment	Response Code	Response
134	AT-12	Todd M		Prepare table adding new camera lowering pole dimensions and design all foundations per the agency contract calculations and specs.	A	Comment Incorporated
135	AT-12	Aaron B	4/23/2007	Add dimensions and layout for lowering poles.	A	Comment Incorporated
136	AT-12	Todd M	4/23/2007	Add lap splice length	A	Comment Incorporated
137	AT-12	Gerard	5/1/2007	Make note that concrete is to be AA(AE).	A	Comment Incorporated
138	AT-12	Gerard	5/1/2007	Add "within 20 feet of pole" to the second row of table 1	A	Comment Incorporated
139	AT-12	Bill B	5/22/2007	Show conduit bigger than bolt diameter. Make sure conduit width is consistent.	A	Comment Incorporated
140	AT-12	Bill B	5/22/2007	Don't bother referencing to AT 11 for conduit size. Just label it 2-2" conduits	A	Comment Incorporated
141	AT-12	Bill B	5/22/2007	Add a bolt template to the drawings and specs	A	Added note instead, allowing for any type of template
142	AT-12	Mike A		Redraw the section B-Bs to better represent the sizes and shapes of the foundations, base plates, and bolt arrangement.	A	Comment Incorporated
143	AT-12	Todd M		Change all "caisson" refs to "shaft"	A	Comment Incorporated
144	AT-12	Boyd Wheeler		Check lap splice length of tie.	A	Revised to 2'-4" per code and coating req.
145	AT-12	Todd M		Delete notes next to anchor bolt. This varies now with the many bolt arrangements and clarify table 1 note.	A	Comment Incorporated
146	AT-12	Jason Richins	7/31/2007	Your form will extend down 2 feet, but your sweep is 24" and if it goes into a box is only 18" deep. Can they cut a hole in the form for it to go through? Or should the 30" form be alittle shallower?	B	Yes, they can cut a hole, but we'll evaluate further
147	AT-12	Jason Richins	7/31/2007	Can you add a note that says galvanize the anchor bolts and use coated rebar?	E	Spec calls out to use coated rebar, and bolts come galvanized and are all state furnished under various contracts.
148	AT-12	Robert M	5/1/2007	For Drawing A, is Spiral Cage Cheaper?	D	Though it may be easier to construct with a spiral, the material and manufacturing costs are less with the ties with their greater spacing and shape. Further, I wanted to use #4 bars and the equivalent spiral would require a 2" pitch, allowing very little clear space between bars to vibrate concrete. Ties are fine until spirals can be proven more beneficial in terms of total cost.
149	**AT-13**			**HAR Pole Detail**		

AT 1 through AT 13
Drawing Comment Resolution Log

UDOT, FHWA, Suppliers

JL = John Leonard
RS = Roland Stanger (FHWA)
Robert Miles
Mark Taylor
TMD = ITS Standards Group, see note
Jason Richins
Boyd Wheeler
Tyler Yorgason (ACEC)
Degen Lewis
Mike Xiras
Larry Montoya

TransCore

Dwayne Fontaine
Aaron Cloward
Todd Mac Gillvray
Gerard Kies
Aaron Buchanan
Jonathan Turner

Response Code Legend

A - Add or Correct
B - Clarify or Evaluate
C - Additional Information Needed
D - Not Cost Effective / Preference
E - Disagree
F - Delete Comment

ID #	Sheet #	Comment made by:	Comment Date	Comment	Response Code	Response
150	AT-13			Add note to size pole for HAR as per Vendor Recommendations, accommodating all equipment attachments	A	Comment Incorporated
151	AT-13	Jason Richins	7/31/2007	Arrow heads.	A	Comment Incorporated
152	AT-13	Jason Richins	7/31/2007	The call out that says "CAP AFTER INSTALLATION TO PROTECT FROM WEATHER", does the equipement installation occur later? If not do they cap over the mule tape?	F	yes
153	AT-13	Jason Richins	7/31/2007	What are you using to back fill around the pole? It is a different pattern than the natural ground, but it isn't called out.	A	Comment Incorporated
154	AT-13	Tyler Yorgason	8/7/2007	In the detail name AT 19 should be replaced by AT 13	A	Comment Incorporated
155	AT-13	Tyler Yorgason	8/7/2007	Is there any detail needed for the fiberglass HAR pole, or its foundation?	B	No, all refs to the fiberglass pole and its foundation were removed from the spec since the wood pole will be the predominant standard for now. These fiberglass poles are always provided by the vendor, but more research has to be done on price etc. so a foundation could be standardized if we want to go with this option.
156	AT-13	Tyler Yorgason	8/7/2007	In the note behind the leader to the conduit running along the pole above ground, what is GRC?	B	GRC is defined on the AT 1 Legend sheet, as are most AT sheet abbreviations. "Galvanized Rigid Conduit"
157	AT-13	RS/JL	8/8/2007	What is a 'Classified Wood Pole'? The Department is in the process of eliminating all wood posts on the State system, and replacing with durable materials.	B	Looking into further. Wood poles have different classes that handle different loading, but the term "Classified" may be improper. This is the first I've heard of wood post elimination and this cannot be generalized from sign posts to utility poles (used for bringing overhead power) and the timbers commonly used for HAR.
158	AT-13	RS/JL	8/8/2007	Ensure that the fixed pole holding up the HAR is outside 1.2 times the Clear Zone.	A / E	The AASHTO clear zone is adequate. If the location has a curve then this 1.2 may be applied per the Roadside Design Guide.
159	AT-13	Bill B / Aaron C	8/3/2007	Indicate Coil #6 bare copper ground wire (15')	A	Comment Incorporated
160	AT-13	Todd M	8/3/2007	Indicate Bushing as (TYP)	A	Comment Incorporated
161	AT-13	Todd M	8/3/2007	Change "Mule tape" to "pull tape"	A	Comment Incorporated
162	AT-13	Todd M	8/3/2007	Referring to AT 8, Indicate 8'x5/8" copper coated steel ground rod connect to disconnect and supply ground	A	Comment Incorporated
163	AT-13	Todd M	8/3/2007	Change note to "Size pole [diameter] per HAR…"	A	Comment Incorporated

AT 1 through AT 13
Drawing Comment Resolution Log

UDOT, FHWA, Suppliers

JL = John Leonard
RS = Roland Stanger (FHWA)
Robert Miles
Mark Taylor
TMD = ITS Standards Group, see note
Jason Richins
Boyd Wheeler
Tyler Yorgason (ACEC)
Degen Lewis
Mike Xiras
Larry Montoya

TransCore

Dwayne Fontaine
Aaron Cloward
Todd Mac Gillvray
Gerard Kies
Aaron Buchanan
Jonathan Turner

Response Code Legend

A - Add or Correct
B - Clarify or Evaluate
C - Additional Information Needed
D - Not Cost Effective / Preference
E - Disagree
F - Delete Comment

ID #	Sheet #	Comment made by:	Comment Date	Comment	Response Code	Response

Note: TMD represents comments from Tam Southwick, Bill Butterfield, Matthew Smith, Michael Adams, Lynne Yocom, Bryan Chamberlain, Brad Cameron, Glenn Blackwelder, and TransCore.

ATMS LINE STYLE LEGEND

FUTURE OR EXISTING	REQ'D	TYPE	CONDUCTOR TYPES
----#d----	——#D——	4-CONDUIT DUCT BANK (# INDICATES NUMBER OF 4-CONDUIT DUCT BANKS 1, 2, OR 4)	FIBER OPTIC
----hv#----	——HV#——	HIGH VOLTAGE CONDUIT (# INDICATES SIZE IN INCHES - 1 1/2, 2, 3, OR 4)	120, 240, OR 480VAC
----lv#----	——LV#——	LOW VOLTAGE CONDUIT (# INDICATES SIZE IN INCHES - 1 1/2, 2, 3, OR 4)	COPPER COMM OR POWER LESS THAN 120VAC
--- tal# ---	— TAL# —	TAIL CIRCUIT COMMUNICATIONS CONDUIT (# INDICATES SIZE IN INCHES - 1 1/2, 2, 3, OR 4)	FIBER OPTIC OR COPPER COMM
--- spr# ---	— SPR# —	SPARE CONDUIT (# INDICATES SIZE IN INCHES - 1 1/2, 2, 3, OR 4)	EMPTY
----xc-----		EXISTING CONDUIT	UNKNOWN OR AS SPECIFIED
--- ohp ----	——OHP——	OVERHEAD POWER	N/A
--- ohc ----	——OHC——	OVERHEAD COMMUNICATIONS	N/A
--- ohx ----		EXISTING OVERHEAD CONDUCTORS	UNKNOWN OR AS SPECIFIED

ABBREVIATIONS

ABBREVIATION	DEFINITION
ATMS	ADVANCED TRAFFIC MANAGEMENT SYSTEM
AWG	AMERICAN WIRE GAUGE
BNC	BAYONET NEIL-CONCELMAN
CAB	CABINET
CAT-#	CATEGORY - (# INDICATES CATEGORY NUMBER) CONDUCTOR
CCTV	CLOSED CIRCUIT TELEVISION
COMM	COMMUNICATIONS
DLC	DETECTOR LOOP LEAD-IN CABLES
DIA	DIAMETER
FRE	FIBERGLASS REINFORCED EPOXY
GND	GROUND CONDUCTOR
GRC	GALVANIZED RIGID CONDUIT
HAR	HIGHWAY ADVISORY RADIO
HDPE	HIGH DENSITY POLYETHYLENE
HFC	HYBRID FIBER CABLE
HMA	HOT MIX ASPHALT
LAN	LOCAL AREA NETWORK
NID	NON-INTRUSIVE DETECTOR
NTS	NOT TO SCALE
OC	OFF CENTER
PC	POLYMER CONCRETE
PCCP	PORTLAND CEMENT CONCRETE PAVEMENT
PTCC	PAN-TILT CONTROL CABLE
PTZ	PAN/TILT/ZOOM
PWR	POWER
RDPE	REMOTE DATA PORT ENCLOSURE
REQ'D	REQUIRED
RMS	RAMP METER STATION
ROW	RIGHT-OF-WAY
RPU	REMOTE PROCESSING UNIT (FOR RWIS)
RWIS	ROADWAY WEATHER INFORMATION SYSTEM
## SMF	SINGLE MODE FIBER (## INDICATES NUMBER OF STRANDS)
TMS	TRAFFIC MONITORING STATION
TOC	TRAFFIC OPERATIONS CENTER
TSC	TRAFFIC SIGNAL CONTROLLER
TYP	TYPICAL
VAC	VOLTS (ALTERNATING CURRENT)
VID	VIDEO
VMS	VARIABLE MESSAGE SIGN
WIM	WEIGHT-IN-MOTION
WP	WORKING POINT

DETAIL CALLOUT LEGEND

CALLOUT	MEANING
"X" / "Y"	SEE DETAIL "X" ON SHEET "Y"

CONDUCTOR LEGEND

CALLOUT	DEFINITION
X-Y(Z)	X=QUANTITY Y=WIRE SIZE (AWG) Z=PURPOSE

EQUIPMENT LEGEND

FUTURE OR EXISTING	REQ'D	EQUIPMENT TYPE
		TYPE I FREEWAY VARIABLE MESSAGE SIGN (VMS) ASSEMBLY
		ROADWAY WEATHER INFORMATION SYSTEM
		OMNI DIRECTIONAL ANTENNA
		YAGI DIRECTIONAL ANTENNA
		CCTV CAMERA/PTZ/POLE AND FOUNDATION
		VIDEO DETECTION
		NON-INTRUSIVE DETECTOR
		DETECTOR LOOP
		TYPE I- POLYMER CONCRETE JUNCTION BOX
		TYPE II- POLYMER CONCRETE JUNCTION BOX
		TYPE III- POLYMER CONCRETE JUNCTION BOX
		COMMUNICATIONS VAULT
		COMMUNICATIONS HUB
		ATMS CABINET
		SIGNAL CABINET
		ADVANCED FLASHING BEACON SIGN ON POLE
		MAST ARM WITH SIGNAL HEADS
		SIGNAL HEAD
		POLE
		POWER POLE
		POLE MOUNTED METER
		POWER SERVICE POINT
		UNDERGROUND SERVICE PEDESTAL
		POLE MOUNTED TRANSFORMER
		PAD MOUNTED TRANSFORMER
		PAD MOUNTED TRANSFORMER WITH DISCONNECT

ELECTRICAL SCHEMATIC LEGEND

FUTURE OR EXISTING	SYMBOL	EQUIPMENT
		BREAKER
		METER
		NEUTRAL LUG
		EQUIPMENT GROUND LUG
		GROUND ROD
		TRANSFORMER
		BLADE SWITCH
		FUSE

REVISIONS

NO.	DATE	APPR.	REMARKS
1	2/24/05	S.S.	DRAWING COMPLETELY REVISED.
2	7/23/07	T.J.M.	ADDED ABBREVIATIONS.

UTAH DEPARTMENT OF TRANSPORTATION
STANDARD DRAWINGS FOR ROAD AND BRIDGE CONSTRUCTION
SALT LAKE CITY, UTAH

RECOMMENDED FOR APPROVAL — FEB.24,2005 DATE
CHAIRMAN STANDARDS COMMITTEE APPROVED — FEB.24,2005 DATE
DEPUTY DIRECTOR

LEGEND SHEET

STANDARD DRAWING TITLE

STD DWG
AT 1

DGN File: D:\Standards\StandardSpecsSection\Standards Committee\MeetingFiles\2007\4-August30,07\Mtg\Incoming\st01.dgn
13-AUG-2007

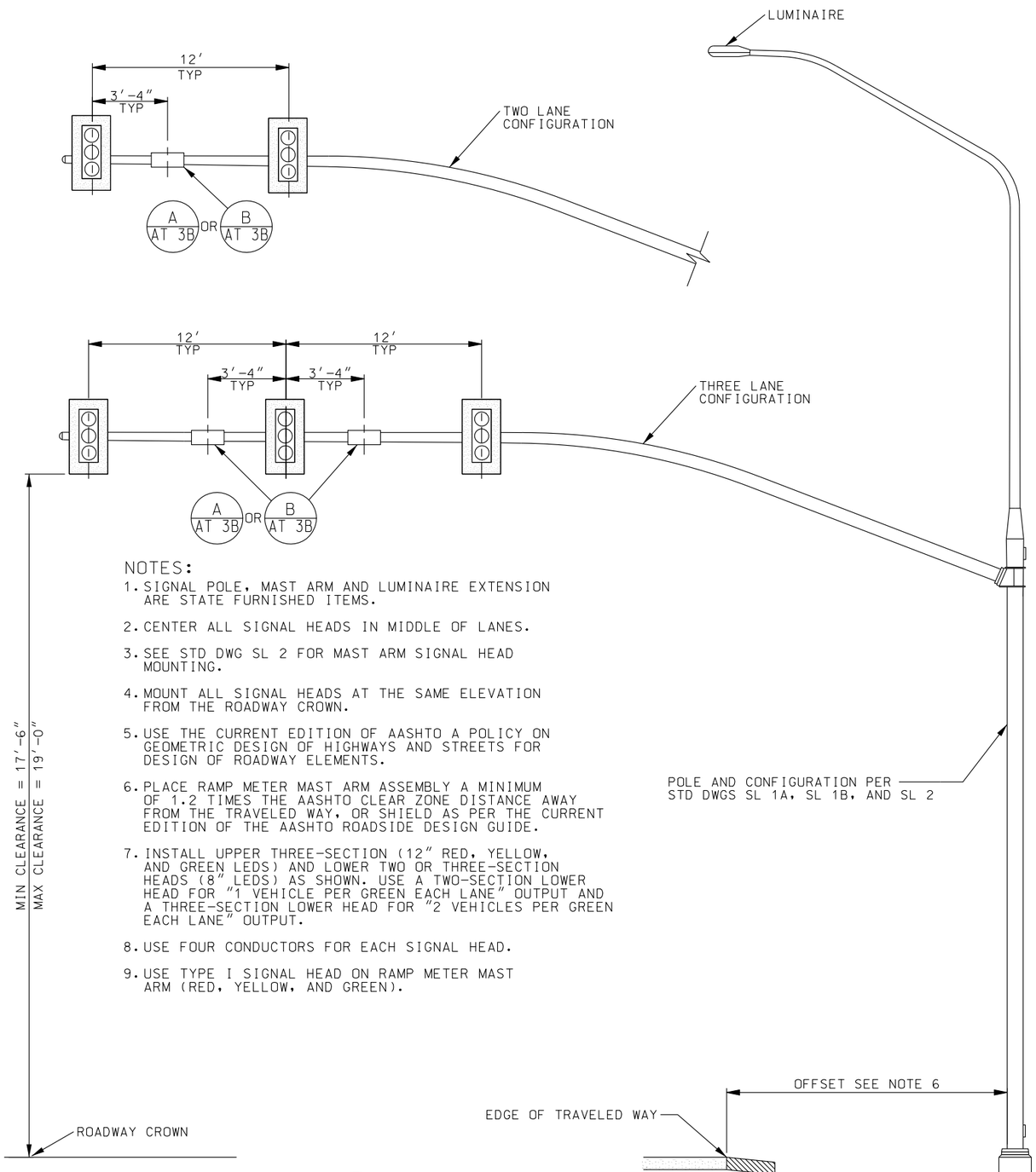

NOTES:

1. SIGNAL POLE, MAST ARM AND LUMINAIRE EXTENSION ARE STATE FURNISHED ITEMS.
2. CENTER ALL SIGNAL HEADS IN MIDDLE OF LANES.
3. SEE STD DWG SL 2 FOR MAST ARM SIGNAL HEAD MOUNTING.
4. MOUNT ALL SIGNAL HEADS AT THE SAME ELEVATION FROM THE ROADWAY CROWN.
5. USE THE CURRENT EDITION OF AASHTO A POLICY ON GEOMETRIC DESIGN OF HIGHWAYS AND STREETS FOR DESIGN OF ROADWAY ELEMENTS.
6. PLACE RAMP METER MAST ARM ASSEMBLY A MINIMUM OF 1.2 TIMES THE AASHTO CLEAR ZONE DISTANCE AWAY FROM THE TRAVELED WAY, OR SHIELD AS PER THE CURRENT EDITION OF THE AASHTO ROADSIDE DESIGN GUIDE.
7. INSTALL UPPER THREE-SECTION (12″ RED, YELLOW, AND GREEN LEDS) AND LOWER TWO OR THREE-SECTION HEADS (8″ LEDS) AS SHOWN. USE A TWO-SECTION LOWER HEAD FOR "1 VEHICLE PER GREEN EACH LANE" OUTPUT AND A THREE-SECTION LOWER HEAD FOR "2 VEHICLES PER GREEN EACH LANE" OUTPUT.
8. USE FOUR CONDUCTORS FOR EACH SIGNAL HEAD.
9. USE TYPE I SIGNAL HEAD ON RAMP METER MAST ARM (RED, YELLOW, AND GREEN).

A / AT 2 RAMP METER MAST ARM SIGNAL ASSEMBLY TWO AND THREE LANE CONFIGURATIONS

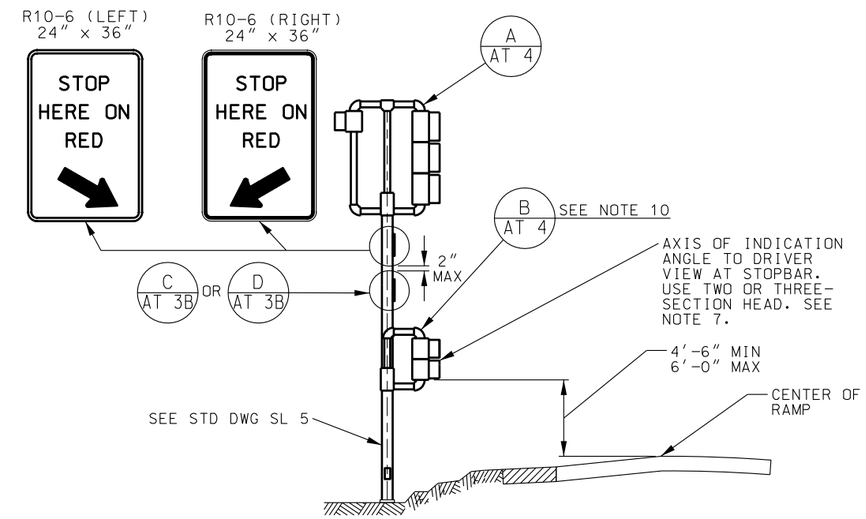

NOTES:

10. USE LOWER SIGNAL HEAD ONLY ON SINGLE LANE RAMPS.
11. VERIFY NUMBER OF VEHICLES PER GREEN WITH TRAFFIC MANAGEMENT DIVISION.
12. PLACE POLE ON BREAKAWAY BASE. LOCATE PER MUTCD.

B / AT 2 RAMP METER POLE MOUNT SIGNAL ASSEMBLY WITH ENFORCEMENT INDICATION

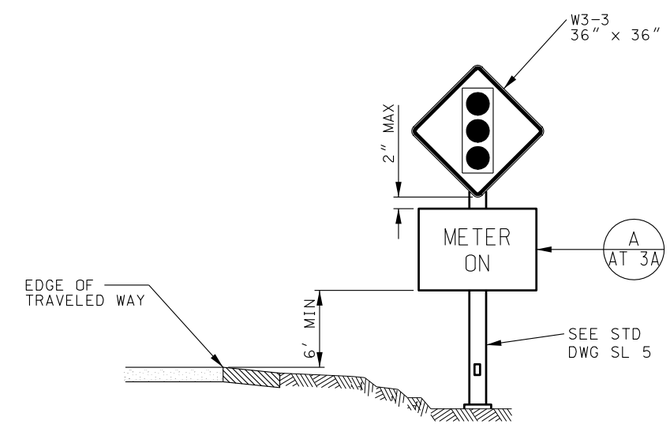

NOTE:

13. PLACE POLE ON BREAKAWAY BASE. LOCATE PER MUTCD.

C / AT 2 RAMP METER ADVANCED WARNING

REVISIONS

NO.	DATE	APPR.	REMARKS
1	2/24/05	S.S.	REVISED "ADVANCED FLASHING BEACON ASSEMBLY" DETAIL AND ADDED 3 LANE MAST ARM ASSEMBLY.
2	06/21/06	TJM	ADDED AND REVISED NOTES.
3	02/22/07	TJM	UPDATED DETAIL B+C TO ADD NOTES AND CALLOUTS.
4	07/09/07	TJM	CHANGED TO 3 SECTION HEAD AND BLANKOUT WARNING.

UTAH DEPARTMENT OF TRANSPORTATION
STANDARD DRAWINGS FOR ROAD AND BRIDGE CONSTRUCTION
SALT LAKE CITY, UTAH

RECOMMENDED FOR APPROVAL — FEB.22,2007 DATE
CHAIRMAN STANDARDS COMMITTEE APPROVED — FEB.22,2007 DATE
DEPUTY DIRECTOR

RAMP METER DETAILS
STANDARD DRAWING TITLE

STD DWG
AT 2

13-AUG-2007 DGN File: G:\Standards and Specs Section\Standards Committee\MeetingFiles\2007\14-August30.07\Mtg\Incoming\at02.dgn

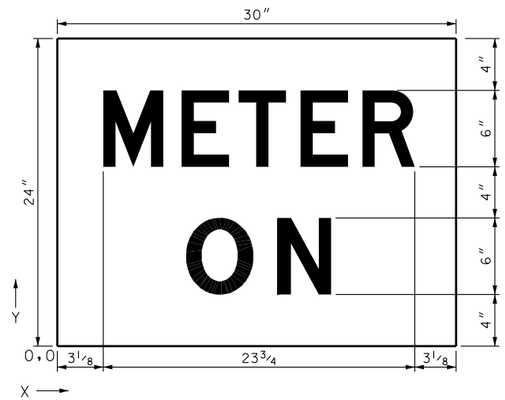

WIDTH x HEIGHT	30" x 24"
MOUNTING	GROUND
BACKGROUND	TYPE: NON-REFLECTIVE
	COLOR: BLACK
LEGEND	TYPE: ILLUMINATED
	COLOR: YELLOW

COORDINATES ARE TO LOWER LEFT CORNERS

Y FONT	LETTER POSITIONS (X)								HT LEN
14	M	E	T	E	R				6
E	3 1/8	10 3/8	15 1/2	21 1/8	26 7/8				23 3/4
4	O	N							6
E	8 1/2	16 5/8							13

NOTE:

1. PLACE "METER ON" BLANKOUT SIGN ON PERPENDICULAR STREET (BOTH DIRECTIONS) AS CLOSE TO RAMP AS POSSIBLE AND IN AN AREA THAT PROVIDES ENOUGH DECISION TIME TO USE THE RAMP.

A / AT 3A METER ON BLANKOUT SIGN DETAIL

REVISIONS

NO.	DATE	APPR.	REMARKS
1	02/22/07	TJM	NEW DRAWING. REPLACED AT 3. REMAINING DETAILS ON AT 3B
2	07/10/07	TJM	CHANGED TO METER ON BLANKOUT AND 3 SECTION HEAD WARNING

UTAH DEPARTMENT OF TRANSPORTATION
STANDARD DRAWINGS FOR ROAD AND BRIDGE CONSTRUCTION
SALT LAKE CITY, UTAH

RECOMMENDED FOR APPROVAL — FEB.22,2007 DATE
CHAIRMAN STANDARDS COMMITTEE APPROVED — FEB.22,2007 DATE
DEPUTY DIRECTOR

RAMP METER SIGN PANEL

STANDARD DRAWING TITLE

STD DWG
AT 3A

DGN File:G:\StandardsandSpecsSection\Standards Committee\MeetingFiles\2007\4-August30.07Mtg\Incoming\sa023A.dgn
13-AUG-2007

WIDTH x HEIGHT	60" x 36"
EDGE TO BORDER	3/8"
BORDER WIDTH	5/8"
CORNER RADIUS	2"
MOUNTING	GROUND
BACKGROUND	TYPE: RETROREFLECTIVE
	COLOR: WHITE
LEGEND/BORDER	TYPE: NON-REFLECTIVE
	COLOR: BLACK

COORDINATES ARE TO LOWER LEFT CORNERS

Y FONT	LETTER POSITIONS (X)								HT LEN
24½ EM	V	E	H	I	C	L	E		6
	16¼	23	28⅝	35	37¾	43¾	49¼		37½
23½ EM	1								8
	6⅛								2½
14½ EM	P	E	R	G	R	E	E	N	6
	4¼	10⅝	16¼	27	33¼	39½	45¼	50¾	51¼
4½ EM	E	A	C	H	L	A	N	E	6
	4	9¼	16½	22½	33⅛	38	45¼	51½	52

A / AT 3B — 1 VEHICLE PER GREEN EACH LANE
RS-23A SIGN DETAIL

WIDTH x HEIGHT	60" x 36"
EDGE TO BORDER	3/8"
BORDER WIDTH	5/8"
CORNER RADIUS	2"
MOUNTING	GROUND
BACKGROUND	TYPE: RETROREFLECTIVE
	COLOR: WHITE
LEGEND/BORDER	TYPE: NON-REFLECTIVE
	COLOR: BLACK

COORDINATES ARE TO LOWER LEFT CORNERS

Y FONT	LETTER POSITIONS (X)								HT LEN
24½ EM	V	E	H	I	C	L	E	S	6
	12½	19¼	24⅞	31½	34	40	45½	51	43½
23½ EM	2								8
	5								5
14½ EM	P	E	R	G	R	E	E	N	6
	4¼	10⅝	16¼	27	33¼	39½	45¼	50¾	51¼
4½ EM	E	A	C	H	L	A	N	E	6
	4	9¼	16½	22½	33⅛	38	45¼	51½	52

B / AT 3B — 2 VEHICLES PER GREEN EACH LANE
RS-23B SIGN DETAIL

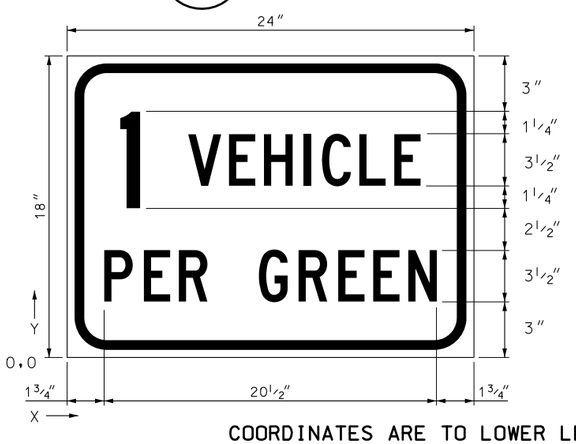

WIDTH x HEIGHT	24" x 18"
EDGE TO BORDER	3/8"
BORDER WIDTH	5/8"
CORNER RADIUS	2"
MOUNTING	GROUND
BACKGROUND	TYPE: RETROREFLECTIVE
	COLOR: WHITE
LEGEND/BORDER	TYPE: NON-REFLECTIVE
	COLOR: BLACK

COORDINATES ARE TO LOWER LEFT CORNERS

Y FONT	LETTER POSITIONS (X)								HT LEN
10¼ C	V	E	H	I	C	L	E		3½
	7	9⅜	11⅝	14	15⅛	17⅜	19⅝		14¼
9 C	1								6
	2¾								1¼
3 C	P	E	R	G	R	E	E	N	3½
	1¾	4¼	6⅜	11¼	13¾	16⅛	18¼	20⅜	20½

C / AT 3B — 1 VEHICLE PER GREEN
RS-22A SIGN DETAIL

NOTE:

1. VERIFY NUMBER OF VEHICLES PER GREEN WITH TRAFFIC MANAGEMENT DIVISION.

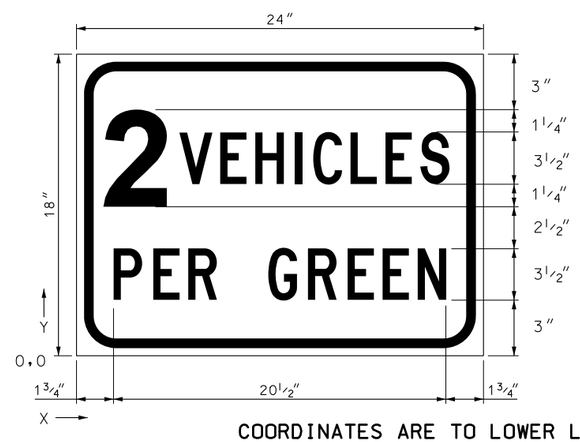

WIDTH x HEIGHT	24" x 18"
EDGE TO BORDER	3/8"
BORDER WIDTH	5/8"
CORNER RADIUS	2"
MOUNTING	GROUND
BACKGROUND	TYPE: RETROREFLECTIVE
	COLOR: WHITE
LEGEND/BORDER	TYPE: NON-REFLECTIVE
	COLOR: BLACK

COORDINATES ARE TO LOWER LEFT CORNERS

Y FONT	LETTER POSITIONS (X)								HT LEN
10¼ C	V	E	H	I	C	L	E	S	3½
	5½	7⅞	10⅛	12½	13⅝	15⅞	18⅛	20¼	14¼
9 C	2								6
	2								2
3 C	P	E	R	G	R	E	E	N	3½
	1¾	4¼	6⅜	11¼	13¾	16⅛	18¼	20⅜	20½

D / AT 3B — 2 VEHICLES PER GREEN
RS-22B SIGN DETAIL

REVISIONS

NO.	DATE	APPR.	REMARKS
1	02/22/07	TJM	NEW DRAWING. DETAILS FROM OLD AT 3. ADDED 2 VEHICLES PER GREEN OPTION AND NOTE 1.

UTAH DEPARTMENT OF TRANSPORTATION
STANDARD DRAWINGS FOR ROAD AND BRIDGE CONSTRUCTION
SALT LAKE CITY, UTAH

RECOMMENDED FOR APPROVAL — FEB.22,2007 DATE
CHAIRMAN STANDARDS COMMITTEE APPROVED — FEB.22,2007 DATE
DEPUTY DIRECTOR

RAMP METER SIGN PANEL

STANDARD DRAWING TITLE

STD DWG
AT 3B

DGN File: Q:\Standards and Specs Section\Standards Committee\MeetingFiles\2007\4-August 30, 07\Mig\Incoming\at038.dgn
13-AUG-2007

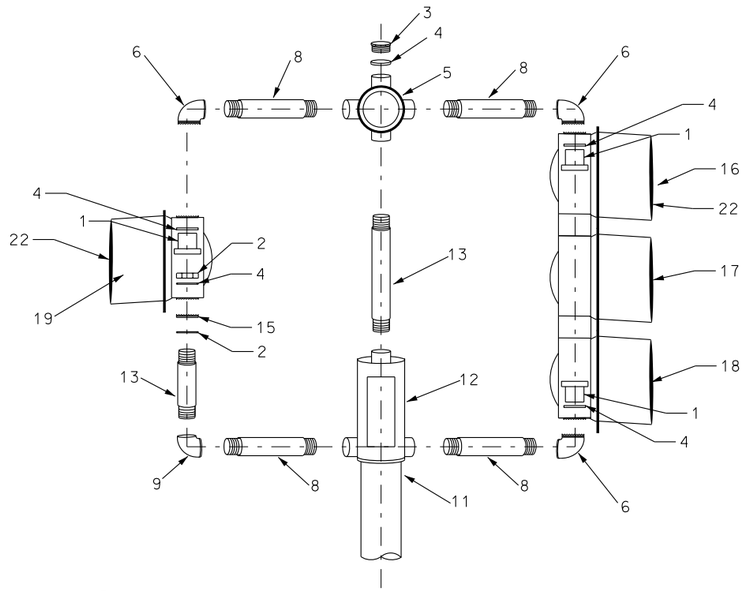

A
AT 4
UPPER SIGNAL HEAD MOUNTING DETAILS
WITH ENFORCEMENT INDICATION

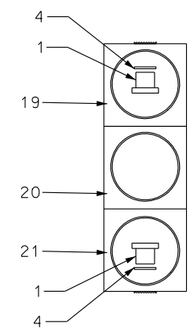

SEE NOTE 2

OR

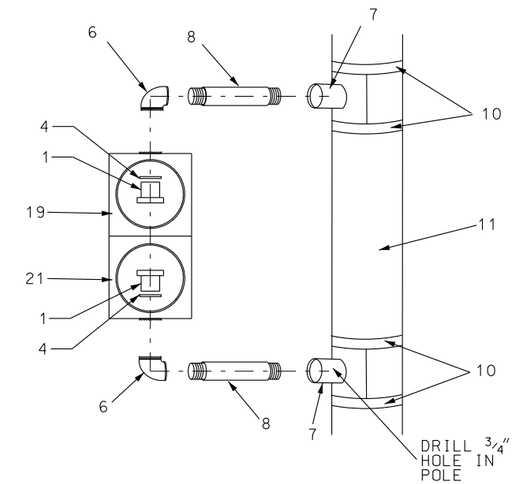

B
AT 4
LOWER SIGNAL HEAD MOUNTING DETAILS

DETAIL LEGEND:

1. LOCK NIPPLE, BRASS, 1½" x 1¾"
2. LOCK NUT, BRASS, 1½"
3. CAP, ORNAMENTAL, LONG, BRASS, 1½" x 1¾"
4. WASHER, STAINLESS STEEL
5. HUB, CENTER W/COVER PLATE 4-WAY, BRASS
6. ELBOW, 90°, GALVANIZED, THREADED INSIDE, 1½" SERRATED
7. ROUND POLE PLATE, GALVANIZED
8. PIPE, GALVANIZED, THREADED BOTH ENDS, 1½" x 12",
9. ELBOW, 90°, GALVANIZED, THREADED INSIDE, 1½"
10. BANDS, STAINLESS STEEL, ¾"
11. POLE SHAFT
12. POST TOP TERMINAL COMPARTMENT, 2 WAY, BRASS, WITH NO TERMINAL BLOCK
13. PIPE, GALVANIZED, LENGTH VARIABLE, THREADED BOTH ENDS, 1½"
14. POST TOP TERMINAL COMPARTMENT, BRASS, WITH NO TERMINAL BLOCK
15. WASHER, SERRATED, 1½"
16. SIGNAL HEAD - RED LED, 12"
17. SIGNAL HEAD - YELLOW LED, 12"
18. SIGNAL HEAD - GREEN LED, 12"
19. SIGNAL HEAD - RED LED, 8"
20. SIGNAL HEAD - YELLOW LED, 8"
21. SIGNAL HEAD - GREEN LED, 8"
22. VISOR - 8" AND 12"

NOTES:

1. USE LOWER SIGNAL HEAD ONLY ON SINGLE LANE RAMPS.
2. USE A TWO-SECTION LOWER HEAD FOR "1 VEHICLE PER GREEN EACH LANE" OUTPUT AND A THREE-SECTION LOWER HEAD FOR "2 VEHICLES PER GREEN EACH LANE" OUTPUT.
3. USE FOUR CONDUCTORS FOR EACH SIGNAL HEAD.

REVISIONS

NO.	DATE	APPR.	REMARKS
1	04/28/05	S.S.	UPDATED AND REARANGED DETAILS.
2	6/21/06	TJM	ADDED VISOR AND DELETED POWDER NOTE.
3	02/22/07	TJM	ADDED #21 TO DETAIL LEGEND AND CALLOUT IN DETAIL B.
4	04/26/07	TJM	CORRECTED DETAIL AT 4B FOR REVERSED NUMBERS.
5	07/10/07	TJM	MODIFIED PER THREE-SECTION HEAD REQUIREMENTS.

UTAH DEPARTMENT OF TRANSPORTATION
STANDARD DRAWINGS FOR ROAD AND BRIDGE CONSTRUCTION
SALT LAKE CITY, UTAH

RECOMMENDED FOR APPROVAL — APR.26.2007 DATE
CHAIRMAN STANDARDS COMMITTEE APPROVED — APR.26.2007 DATE
DEPUTY DIRECTOR

TYPICAL RAMP METER SIGNAL HEAD MOUNTING

STANDARD DRAWING TITLE

STD DWG
AT 4

13-AUG-2007 DGN Files D:\StandardsandSpecsSection\Standards Committees\MeetingFiles\2007\4-August30.07Mtg\Incoming\at04.dgn

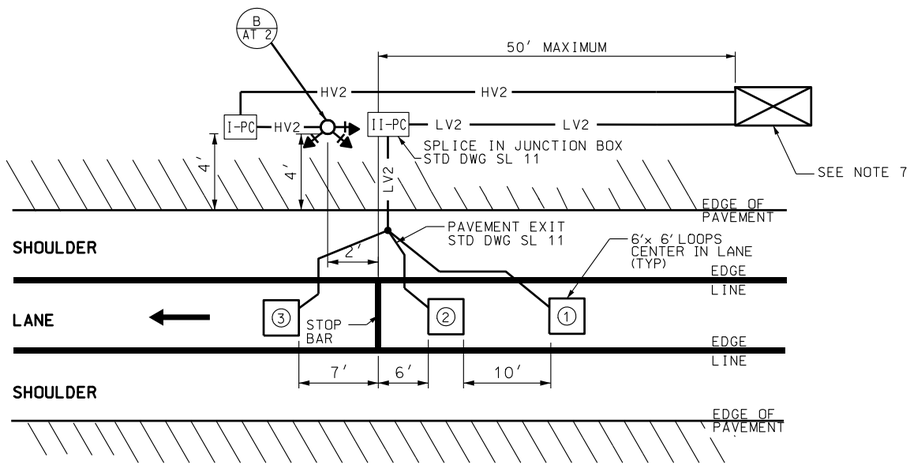

A AT 5 ONE LANE RAMP METER LOOP INSTALLATION DETAIL

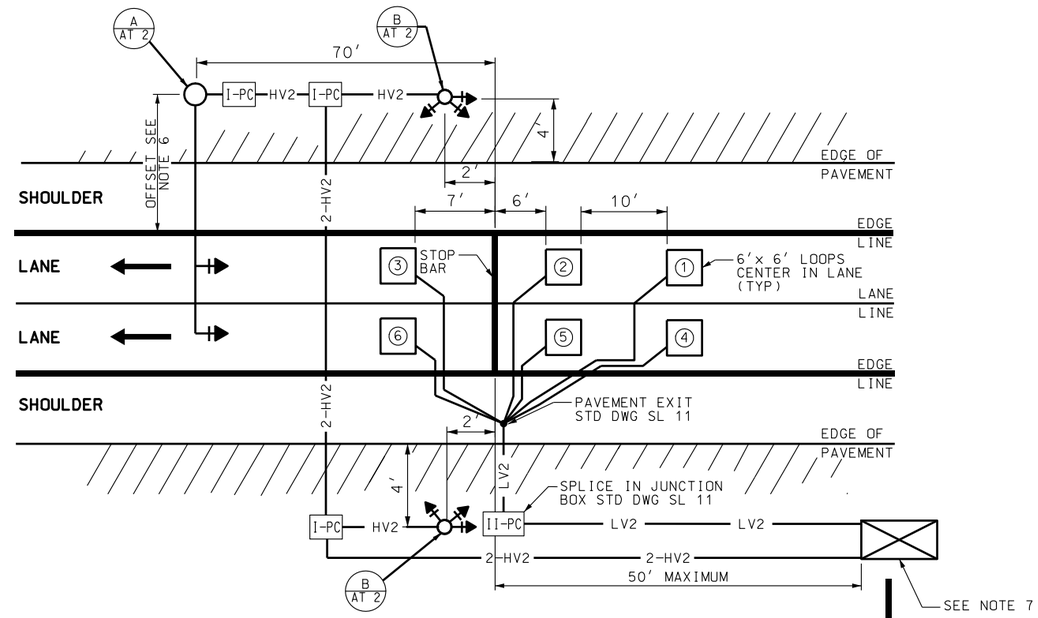

B AT 5 TWO LANE RAMP METER LOOP INSTALLATION DETAIL

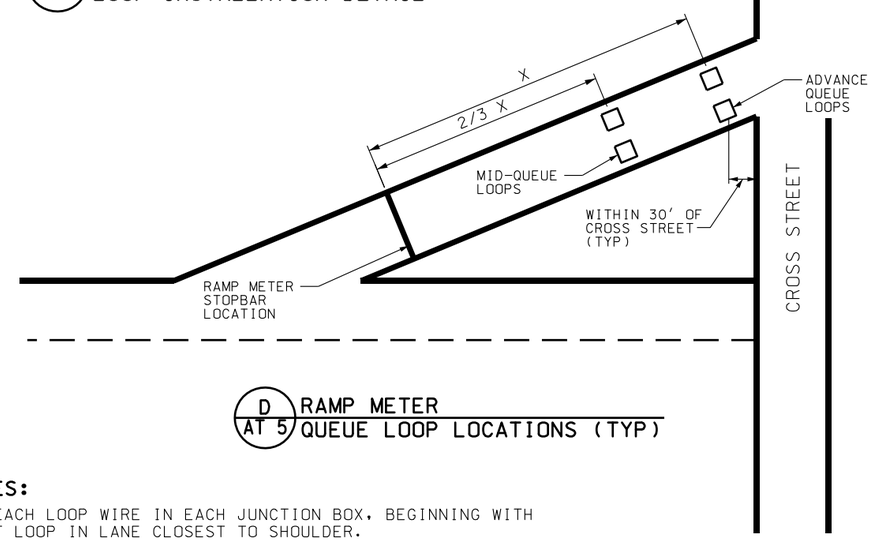

D AT 5 RAMP METER QUEUE LOOP LOCATIONS (TYP)

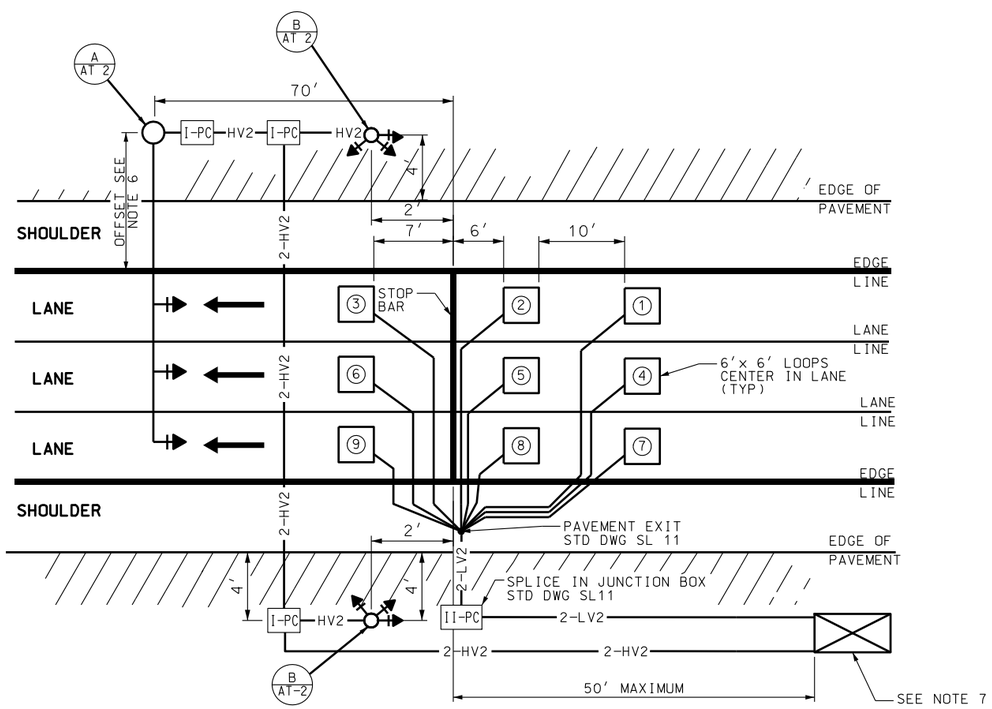

C AT 5 THREE LANE RAMP METER LOOP INSTALLATION DETAIL

NOTES:

1. TAG EACH LOOP WIRE IN EACH JUNCTION BOX, BEGINNING WITH FIRST LOOP IN LANE CLOSEST TO SHOULDER.
2. PLACE JUNCTION BOXES PER AT 7. REFER TO SL 11 AND SL 12 FOR DETECTION.
3. USE THE CURRENT EDITION OF AASHTO ROADSIDE DESIGN GUIDE FOR CLEAR ZONE REQUIREMENTS. CLEAR ZONE MAY EXTEND INTO CUT OR FILL SLOPES.
4. USE PREFORMED LOOPS IN NEW PAVEMENT.
5. USE SEPARATE CONDUCTOR HOME RUN TO CABINET FOR EACH LOOP.
6. PLACE RAMP METER MAST ARM ASSEMBLY AND CABINET A MINIMUM OF 1.2 TIMES THE AASHTO CLEAR ZONE DISTANCE AWAY FROM THE TRAVELED WAY, OR SHIELD AS PER THE CURRENT EDITION OF THE AASHTO ROADSIDE DESIGN GUIDE.
7. PLACE CABINET ON RIGHT SIDE OF TRAFFIC UNLESS SPACE IS UNAVAILABLE. CABINET ON LEFT SIDE MUST MEET CLEAR ZONE REQUIREMENTS FOR MAINLINE AND RAMP.

REVISIONS

NO.	DATE	APPR.	REMARKS
1	02/24/05	S.S.	ADDED QUEUE LOOP LOCATION DETAIL AND 3 LANE METER LOOP DETAIL. TITLE CHANGED.
2	06/21/06	TJM	ADDED AND REVISED NOTES.
3	02/22/07	TJM	ADDED NOTE 2 AND 7. RENUMBERED NOTES. UPDATED ALL DETAILS FOR NOTE CALLOUTS.
4	08/09/07	TJM	MODIFIED NOTE 7 FOR CABINET PLACEMENT.

UTAH DEPARTMENT OF TRANSPORTATION
STANDARD DRAWINGS FOR ROAD AND BRIDGE CONSTRUCTION
SALT LAKE CITY, UTAH

RECOMMENDED FOR APPROVAL — FEB.22,2007 DATE
CHAIRMAN STANDARDS COMMITTEE
APPROVED — FEB.22,2007 DATE
DEPUTY DIRECTOR

RAMP METER LOOP INSTALLATION

STANDARD DRAWING TITLE

STD DWG
AT 5

DGN File: Q:\Standards\StandardSpecs\Section\Standards Committee\MeetingFiles\2007\4-August30,07Mtg\1rcomrg\at05.dgn
13-AUG-2007

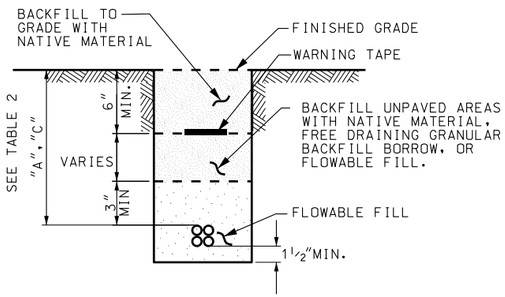

A / AT 6 1-D MULTIDUCT CONDUIT

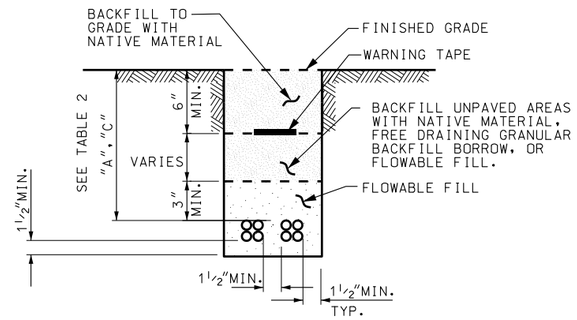

B / AT 6 2-D MULTIDUCT CONDUIT

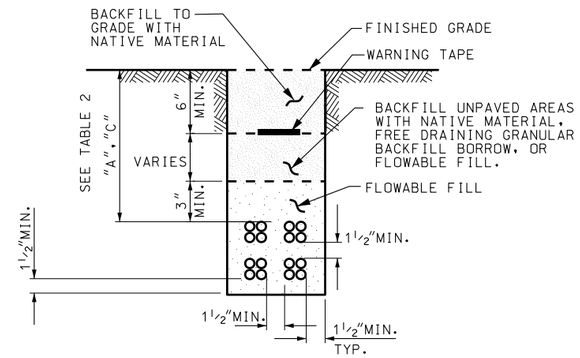

C / AT 6 4-D MULTIDUCT CONDUIT

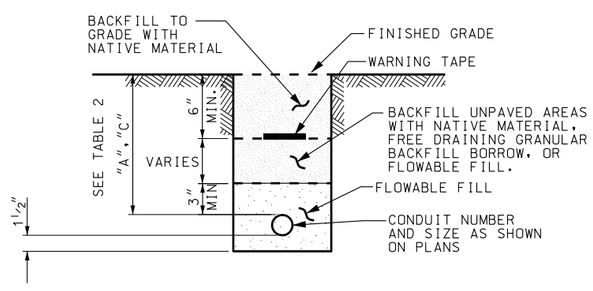

D / AT 6 NON-MULTIDUCT CONDUIT

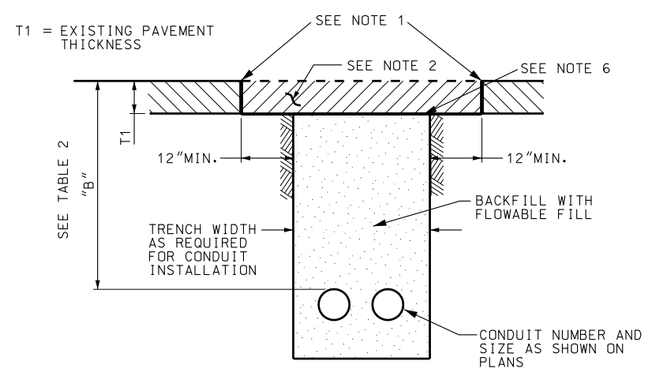

E / AT 6 CONDUIT TRENCHED IN ASPHALT PAVEMENT RESTORED WITH T PATCH

TABLE 1. T PATCH RESTORATION

EXISTING ASPHALT PAVEMENT THICKNESS (T1) IN INCHES	RESTORATION T PATCH THICKNESS IN INCHES
0 – 3½	3½
3½ – 7	MATCH EXISTING DEPTH
7 OR GREATER	7

TABLE 2. MINIMUM CONDUIT DEPTH

	DEPTH IN INCHES	AREA
A	36	OUTSIDE 20 FT OF PAVEMENT EDGE
B	36	HIGHWAY RIGHT-OF-WAY UNDER ASPHALT PAVEMENT SURFACE
C	60	WITHIN 20 FT OF PAVEMENT EDGE

NOTES:

1. SAW CUT PAVEMENT EDGES. APPLY A HOT-POUR RUBBERIZED ASPHALT JOINT SEALANT OR APPROVED EQUAL, APPLIED AFTER PATCH IS INSTALLED.
2. USE HMA MATERIAL FOR T-PATCH. USE OPEN-GRADED SURFACE COURSE FOR THE TOP 1" OF HMA FOR PATCHES GREATER THAN 12 FEET WIDE. WHERE OPEN-GRADED SURFACE COURSE EXISTS, MATCH EXISTING PAVEMENT AND CROSS-SECTION.
3. ENCASE ALL OPEN TRENCH CONDUIT IN FLOWABLE FILL, ENCASE PLOWED AND BORED CONDUIT IN FLOWABLE FILL AT EXPOSED LOCATIONS, CONDUIT SPLICE POINTS, AND BOX CONNECTIONS.
4. INSTALL DETECTABLE PULL TAPE IN ALL EMPTY CONDUITS.
5. EVENLY APPLY TACK COAT ON FINAL BACKFILL BEFORE INSTALLING T-PATCH.

REVISIONS

NO.	DATE	APPR.	REMARKS
1	2/24/05	S.S.	REVISED MULTI-DUCT CONFIG AND T-PATCH REQUIREMENTS.
2	2/22/07	T.M.	REMOVED LOCATE CONDUIT, REQUIRED DETECTABLE FIBER AND DETECTABLE PULL TAPE IN EMPTY CELLS, CLARIFIED FLOWABLE FILL REQUIREMENTS. ADDED NOTES 3-5.
3	7/23/07	T.J.M.	ADDED TABLE 2 REF AND MODIFIED NOTE 2.

UTAH DEPARTMENT OF TRANSPORTATION
STANDARD DRAWINGS FOR ROAD AND BRIDGE CONSTRUCTION
SALT LAKE CITY, UTAH

RECOMMENDED FOR APPROVAL FEB.22.2007
CHAIRMAN STANDARDS COMMITTEE
APPROVED FEB.22.2007
DEPUTY DIRECTOR

CONDUIT DETAILS

STANDARD DRAWING TITLE

STD DWG
AT 6

DGN File: G:\Standards and Specs Section\Standards Committee\MeetingFiles\2007\4-August 30.07\Mig\Incoming\at06.dgn
13-AUG-2007

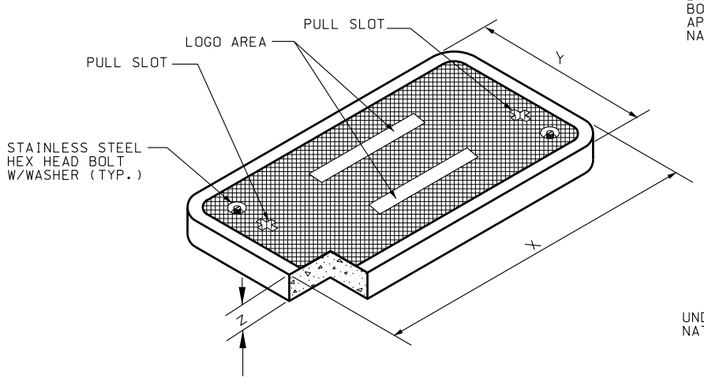

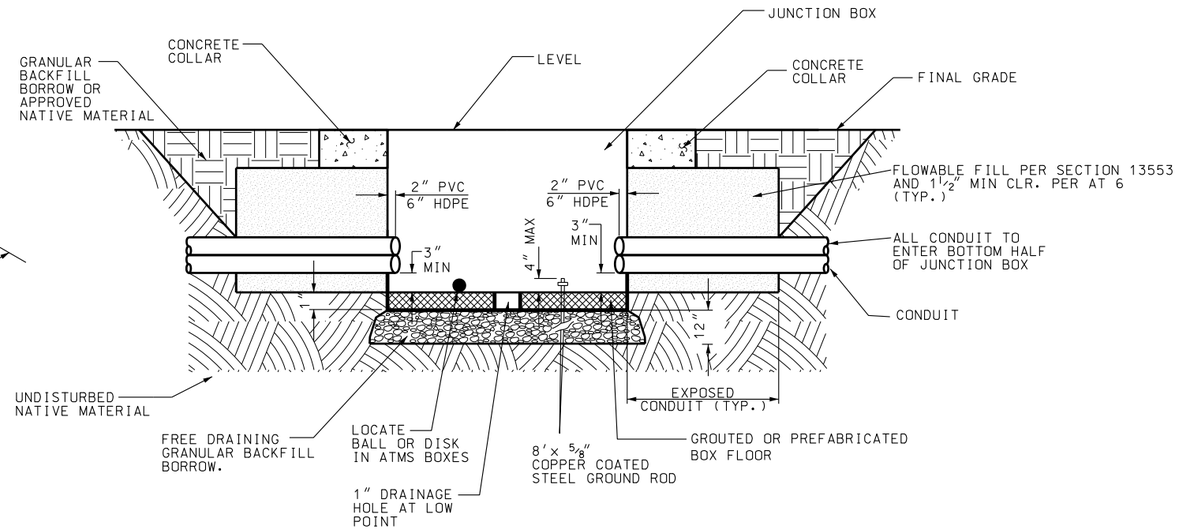

JUNCTION BOX CONDUIT PENETRATION DETAIL

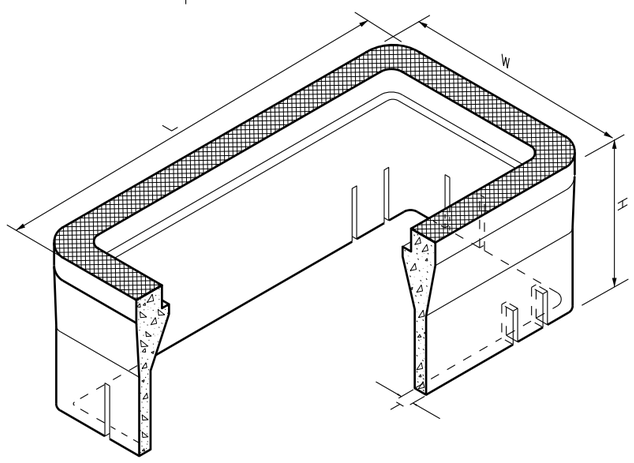

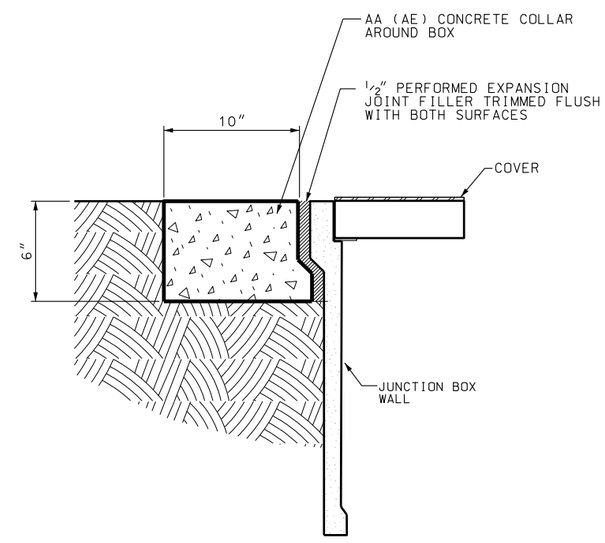

JUNCTION BOX CONCRETE COLLAR DETAIL

BOX AND LID DIMENSIONS

BOX TYPE	"L" inch	"W" inch	"H" inch	"T" inch	"X" inch	"Y" inch	"Z" inch
I-PC	25	16	24	1½	23¼	13¾	2
II-PC	37⅝	26	24	1½	35⅝	24	3
III-PC	49⅝	32⅛	24	2	47⅝	30⅛	3

NOTES:

1. STAMP BOX LOGO INTO THE LID FROM THE FACTORY. (SEE SECTION 13554).
2. DO NOT PLACE JUNCTION BOXES IN THE TRAVELED WAY OR ON FREEWAY SHOULDERS.
3. CONCRETE COLLAR WIDTH VARIES WHEN ADJACENT TO ATMS CABINETS. REFER TO AT AND SL SERIES STD DWGS.
4. PROVIDE CONCRETE COLLARS EXCEPT WITHIN CONCRETE PAVED AREAS.
5. INSTALL CONDUIT PLUG PER SECTION 13554.
6. ALIGN ATMS CONDUIT BY COLOR ON EACH SIDE OF THE JUNCTION BOX.

TABLE 1. JUNCTION BOX LID STATIC VERTICAL LOAD RATING

MINIMUM DESIGN LOAD (lb)	MINIMUM TEST LOAD (lb)	TEST AREA (inch)
16,000	33,500	10 x 20

REVISIONS

NO.	DATE	APPR.	REMARKS
1	2/24/05	S.S.	REMOVED LOAD 3 RATING BOXES AND REVISED DESIGN & TEST LOAD RATINGS.
2	02/23/06	L.M.	TABLE 1 AND TABLE 2 CHANGED TO ELIMINATE LOAD RATING 2. FREEWAY AND ARTERIAL APPLICATION DETAILS REMOVED.
3	02/22/07	T.M.	ADDED FLOW FILL LIMITS, REMOVED TERMINAL BLOCK AND LOAD RATING TABLE, CORRECTED BOLT CALLOUTS, ADDED LOCATE BALL, MODIFIED NOTES.
4	07/20/07	T.M.	DEFINED PVC/HDPE PENETRATION AND CHANGED COLLAR THICKNESS.

UTAH DEPARTMENT OF TRANSPORTATION
STANDARD DRAWINGS FOR ROAD AND BRIDGE CONSTRUCTION
SALT LAKE CITY, UTAH

RECOMMENDED FOR APPROVAL — FEB.23,2006 DATE
CHAIRMAN STANDARDS COMMITTEE APPROVED — FEB.23,2006 DATE
DEPUTY DIRECTOR

POLYMER-CONCRETE JUNCTION BOX DETAILS
STANDARD DRAWING TITLE

STD DWG
AT 7

DGN File: G:\Standards and Specs Section\Standards Committee\MeetingFiles\2007\4-August 30, 07\Mtg\Incoming\st07.dgn
13-AUG-2007

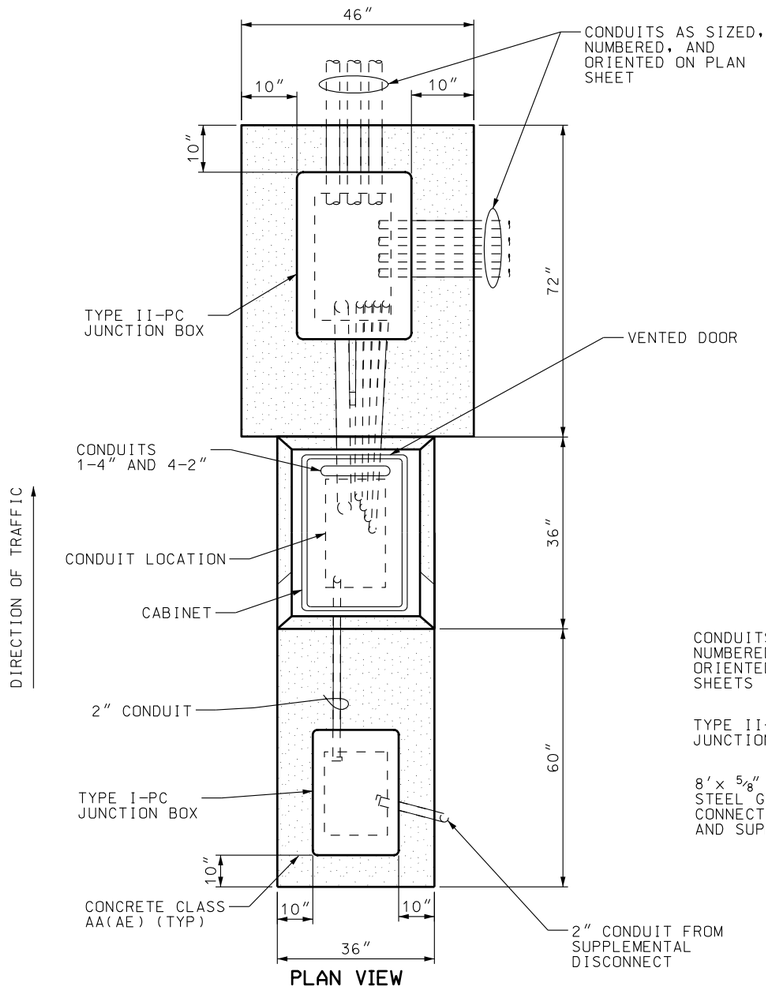

PLAN VIEW

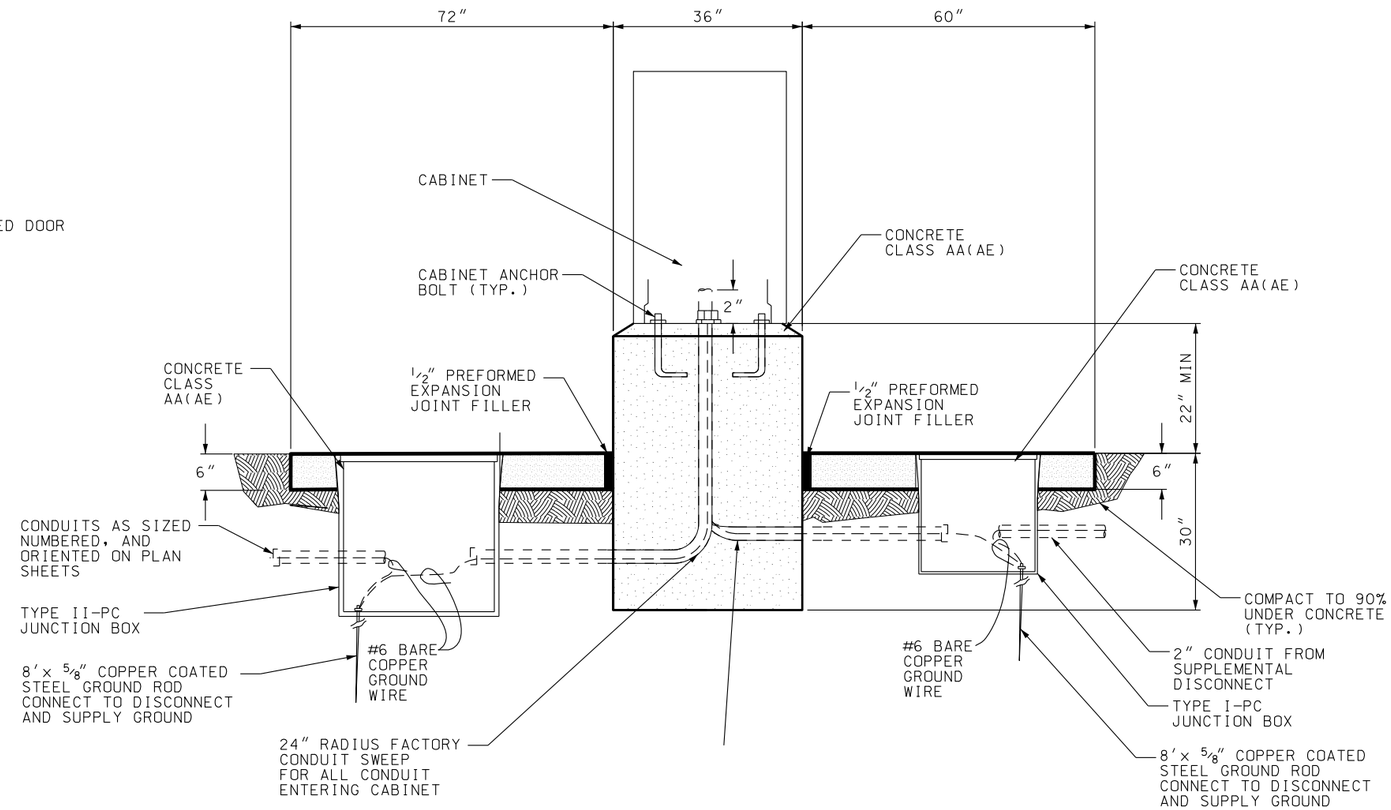

SIDE ELEVATION

A
AT 8

ATMS CABINET

NOTE:

1. SEE STD DWG AT 9 FOR CABINET DISCONNECT AND TRANSFORMER DETAIL.
2. FIELD VERIFY CONDUIT LAYOUT IN FOUNDATION TO AVOID CONFLICT WITH CABINET.
3. SEE STD DWG AT 7 FOR TYPICAL ATMS JUNCTION BOX INSTALLATION.

REVISIONS

NO.	DATE	APPR.	REMARKS
1	02/24/05	S.S.	ENTIRE DRAWING REVISED. TITLE CHANGED.
2	02/22/07	TJM	ADDED NOTE 2 AND 3. CHANGED PLAN VIEW. MODIFIED SIDE ELEVATION DETAIL.
3	04/26/07	TJM	ADDED MISSING JUNCTION BOX DETAIL.
4	08/09/07	TJM	WIDENED DISTANCE BETWEEN BOX LIDS AND CABINET FOUNDATION.

UTAH DEPARTMENT OF TRANSPORTATION
STANDARD DRAWINGS FOR ROAD AND BRIDGE CONSTRUCTION
SALT LAKE CITY, UTAH

RECOMMENDED FOR APPROVAL — APR.26,2007 DATE
CHAIRMAN STANDARDS COMMITTEE APPROVED — APR.26,2007 DATE
DEPUTY DIRECTOR

ATMS CABINET
STANDARD DRAWING TITLE

STD DWG
AT 8

DGN File: G:\Standards and Specs Section\Standards Committee\MeetingFiles\2007\4-August 30, 07\Mig\Incoming\st08.dgn
13-AUG-2007

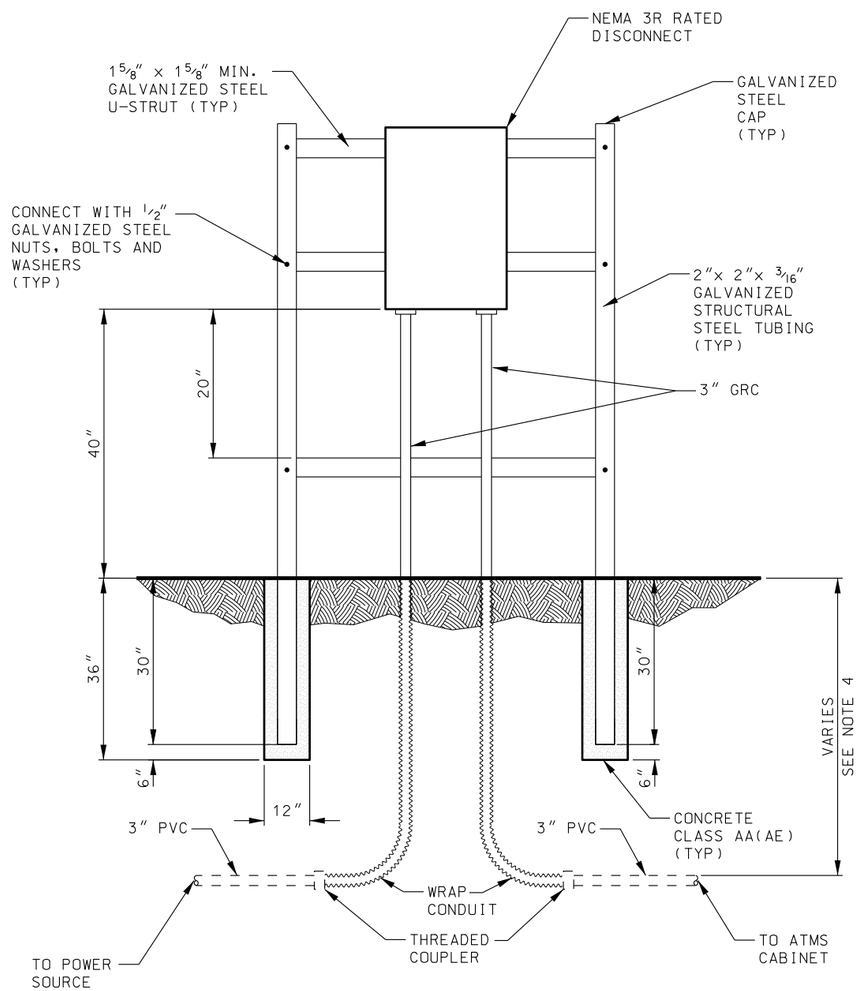

A / AT 9 SUPPLEMENTAL DISCONNECT FRAME

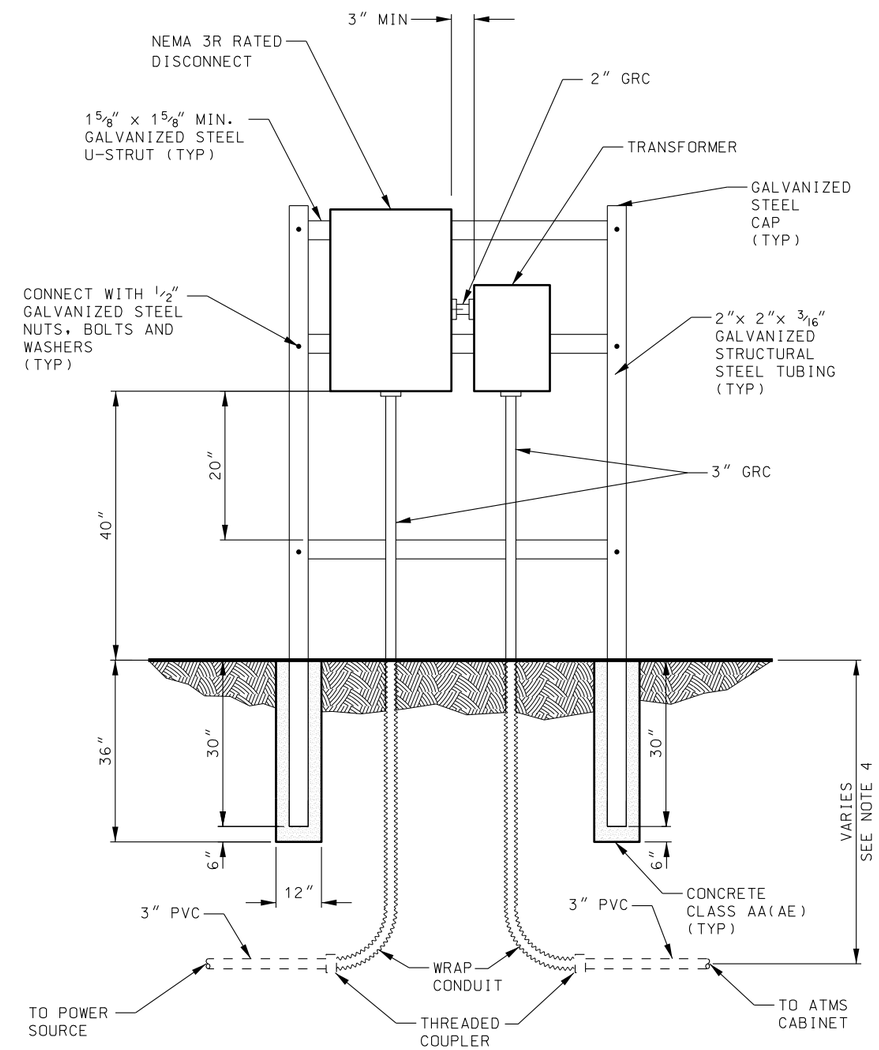

B / AT 9 SUPPLEMENTAL DISCONNECT WITH TRANSFORMER FRAME

NOTE:

1. FRAME SHOULD BE LOCATED BETWEEN 10 TO 15 FEET FROM CABINET.
2. ROUND OFF SHARP EDGES OF STRUCTURAL TUBING. SPRAY GALVANIZE CUT ENDS OF FRAMING STRUTS.
3. ATTACH TRANSFORMER AND DISCONNECT TO FRAMING STRUT WITH WATERTIGHT GASKETS AND GALVANIZED HARDWARE.
4. FOR CONDUIT DEPTH REFER TO SECTION 13553.

REVISIONS

NO.	DATE	APPR.	REMARKS
1	2/24/05	S.S.	DRAWING REPLACED. TITLE CHANGED.
2	02/22/07	TJM	ADDED NOTE 2-4. UPDATED ALL DETAILS.
2	07/23/07	TJM	ADDED CALLOUTS PER FRAMING STRUT AND CAP.

UTAH DEPARTMENT OF TRANSPORTATION
STANDARD DRAWING FOR ROAD AND BRIDGE CONSTRUCTION
SALT LAKE CITY, UTAH

RECOMMENDED FOR APPROVAL — FEB.22.2007 DATE
CHAIRMAN STANDARDS COMMITTEE APPROVED — FEB.22.2007 DATE
DEPUTY DIRECTOR

ATMS CABINET DISCONNECT AND TRANSFORMER FRAME

STANDARD DRAWING TITLE

STD DWG
AT 9

DGN File: D:\StandardsandSpecsSection\Standards Committee\MeetingFiles\2007\4-August32.07\Hwy\Incomrgs\at09.dgn
13-AUG-2007

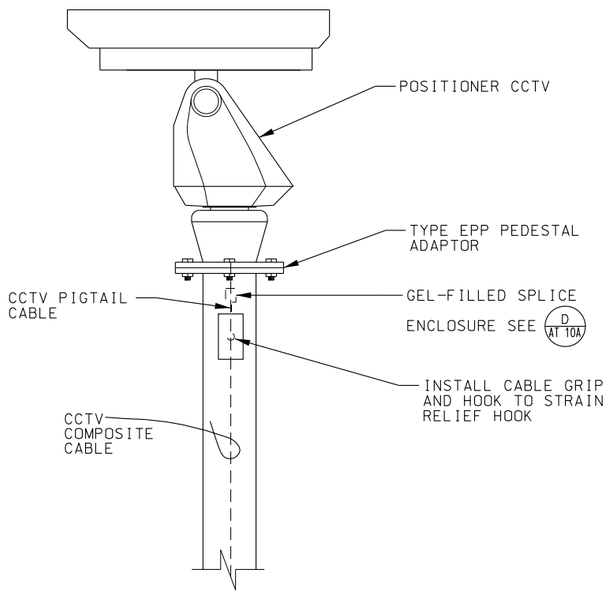

A AT 10A CCTV MOUNTING DETAIL
PEDESTAL MOUNTED POSITIONER CCTV

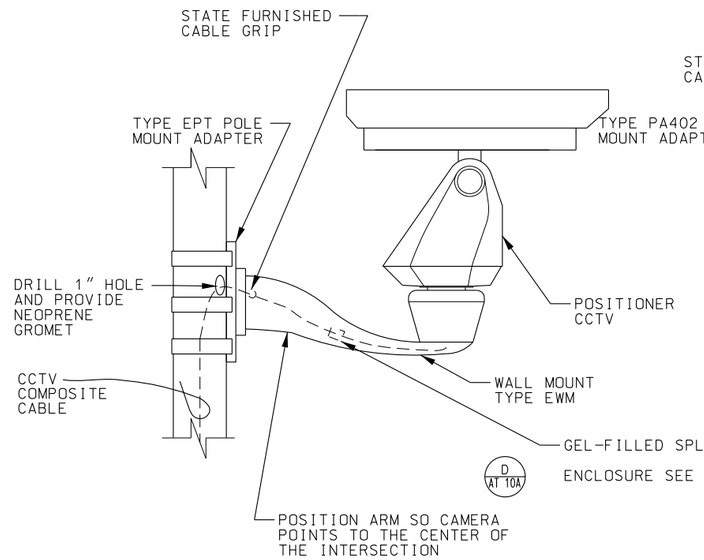

B AT 10A CCTV MOUNTING DETAIL
POLE MOUNTED POSITIONER CCTV

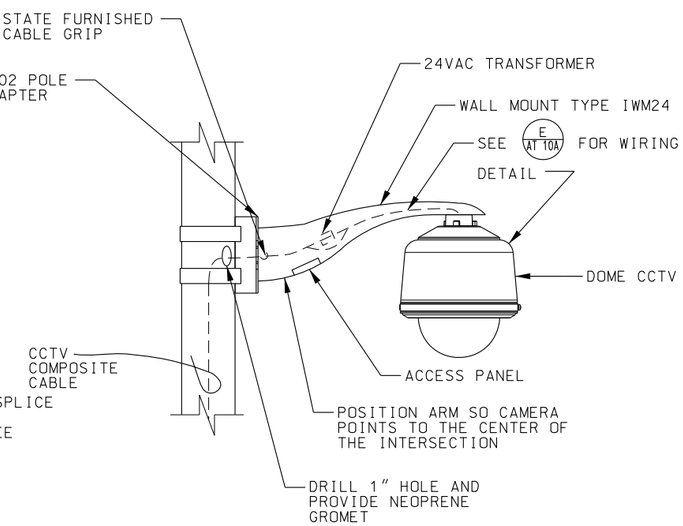

C AT 10A CCTV MOUNTING DETAIL
POLE MOUNTED DOME CCTV

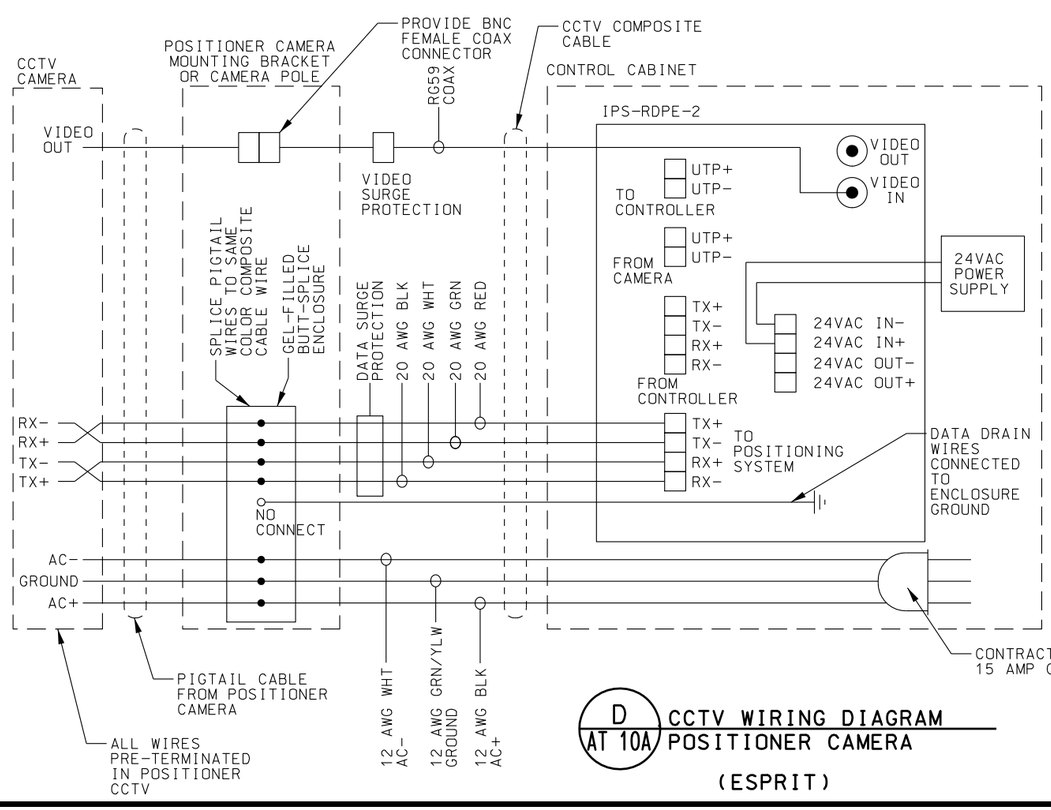

D AT 10A CCTV WIRING DIAGRAM
POSITIONER CAMERA
(ESPRIT)

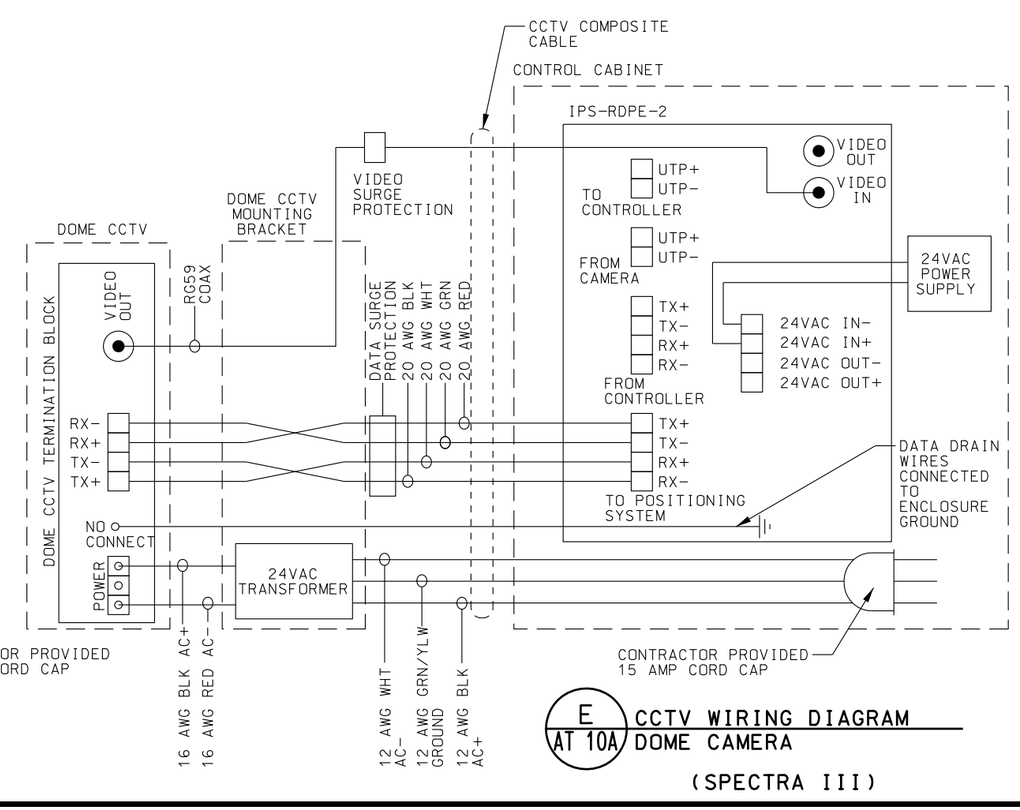

E AT 10A CCTV WIRING DIAGRAM
DOME CAMERA
(SPECTRA III)

NO.	DATE	APPR.	REMARKS
1	2/24/05	S.S.	REVISED CAMERA MOUNTING AND ADDED WIRING.
1	7/23/07	T.J.M	TITLE CHANGED. REVISED CAMERA MOUNTING AND ADDED WIRING.

REVISIONS

UTAH DEPARTMENT OF TRANSPORTATION
STANDARD DRAWINGS FOR ROAD AND BRIDGE CONSTRUCTION
SALT LAKE CITY, UTAH

RECOMMENDED FOR APPROVAL — FEB.24,2005 DATE
CHAIRMAN STANDARDS COMMITTEE APPROVED — FEB.24,2005 DATE
DEPUTY DIRECTOR

CCTV MOUNTING DETAILS
STANDARD DRAWING TITLE

STD DWG
AT 10A

DGN File: G:\Standards&SpecsSection\Standards Committee\MeetingFiles\20071-4-August30,07\Mgt\Incoming\at10A.dgn

13-AUG-2007

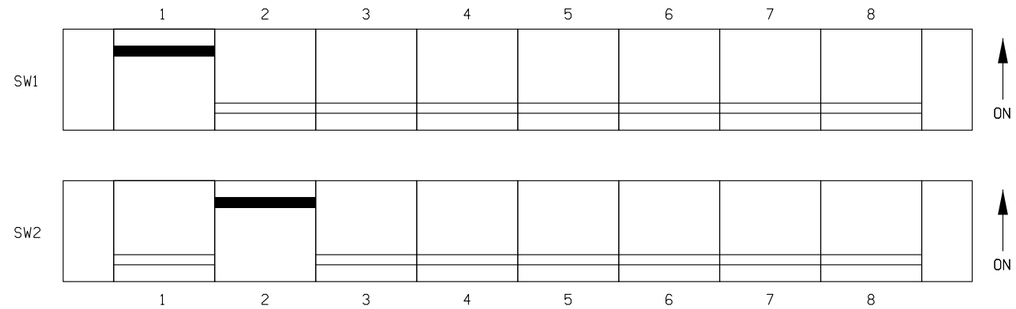

ESPRIT

NOTE:

SET ESPRIT POWER SUPPLY TO 115 VAC. POWER SUPPLY LOCATED IN BASE OF CAMERA.

B / AT 10B — POSITIONER CAMERA PROGRAMMING DIP SWITCH SETTINGS

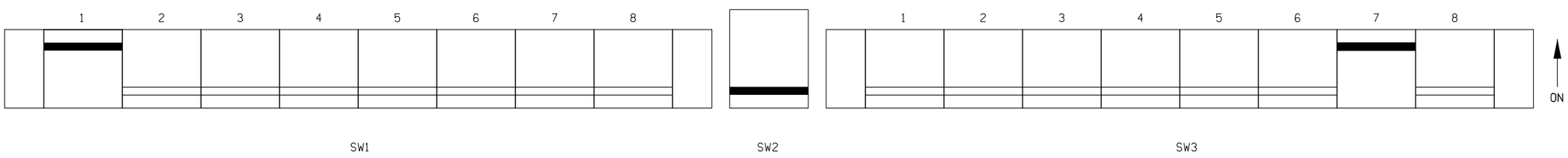

SPECTRA III

B / AT 10B — DOME CAMERA PROGRAMMING DIP SWITCH SETTINGS

NO.	DATE	APPR.	REMARKS

REVISIONS

UTAH DEPARTMENT OF TRANSPORTATION

STANDARD DRAWINGS FOR ROAD AND BRIDGE CONSTRUCTION
SALT LAKE CITY, UTAH

RECOMMENDED FOR APPROVAL — FEB.24,2005 DATE

CHAIRMAN STANDARDS COMMITTEE APPROVED — FEB.24,2005 DATE

DEPUTY DIRECTOR

CCTV SETTINGS

STANDARD DRAWING TITLE

STD DWG
AT 10B

DGN File: D:\StandardsandSpecsSection\Standards Committee\MeetingFiles\2007\14-August30,07Mtg\Incoming\at10B.dgn

13-AUG-2007

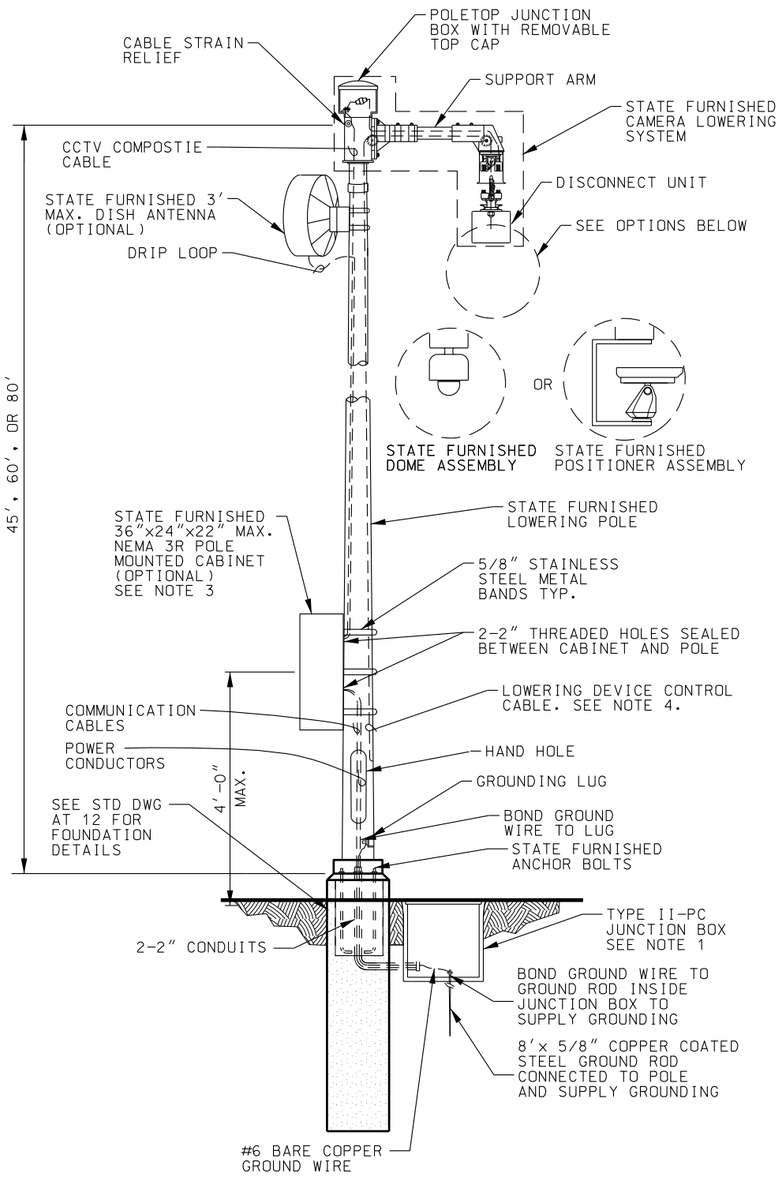

A AT 11 CAMERA LOWERING POLE DETAIL

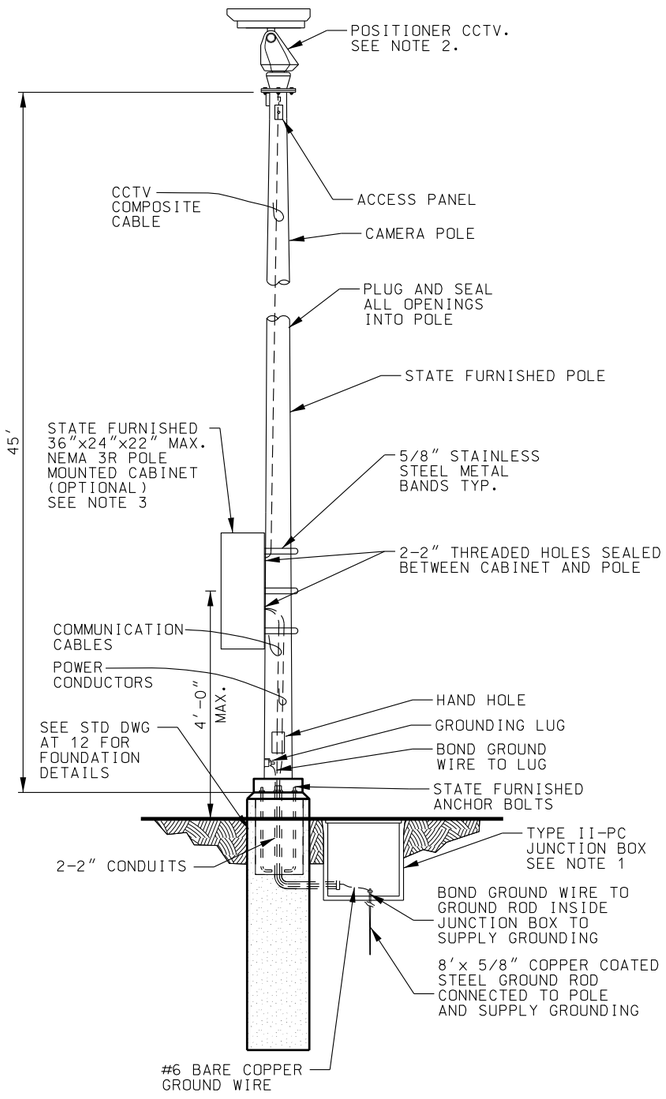

B AT 11 NON-LOWERING CCTV POLE DETAIL

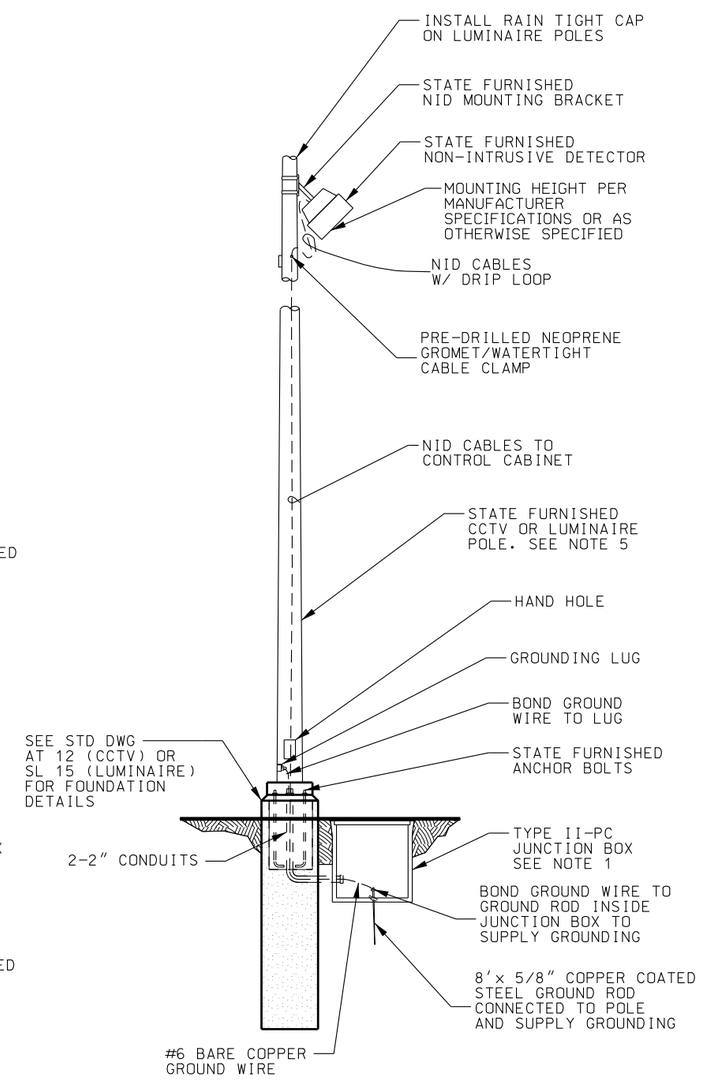

C AT 11 NID MOUNTING DETAIL

NOTES:

1. JUNCTION BOX REQUIRED UNLESS POLE IS WITHIN 20' OF CONTROL CABINET. REFER TO STD DWG AT 7 FOR JUNCTION BOXES.
2. REFER TO STD DWG AT 10A FOR MOUNTING DETAILS.
3. POLE MOUNTED CABINET REQUIRED UNLESS PAD MOUNTED ATMS CABINET IS PROVIDED.
4. LOWERING CABLE MUST NOT CONTACT ANY OTHER CABLE.
5. REFER TO SL 14 FOR LUMINAIRE POLE DETAILS. DO NOT MOUNT DOME CAMERAS ON LUMINAIRE POLES.

REVISIONS

NO.	DATE	APPR.	REMARKS
1	2/24/05	S.S.	ENTIRE DRAWING REVISED.
2	02/23/06	L.M.	UPDATED DRAWING REFERENCE AND ADDED CAP CALLOUT ON DETAIL C.
3	07/23/07	T.J.M	REVISED SHEET NAME, ADDED NEW CAMERA LOWERING POLE DETAILS & MODIFIED NOTES.

UTAH DEPARTMENT OF TRANSPORTATION
STANDARD DRAWINGS FOR ROAD AND BRIDGE CONSTRUCTION
SALT LAKE CITY, UTAH

RECOMMENDED FOR APPROVAL — FEB.23,2006 DATE
CHAIRMAN STANDARDS COMMITTEE — FEB.23,2006 DATE
APPROVED — DEPUTY DIRECTOR

CCTV POLE AND NID MOUNTING DETAILS

STANDARD DRAWING TITLE

STD DWG AT 11

DGN File: O:\StandardsandSpecsSection\Standards Committee\MeetingFiles\2007\4-August30.07Mtg\Incoming\at11.dgn
13-AUG-2007

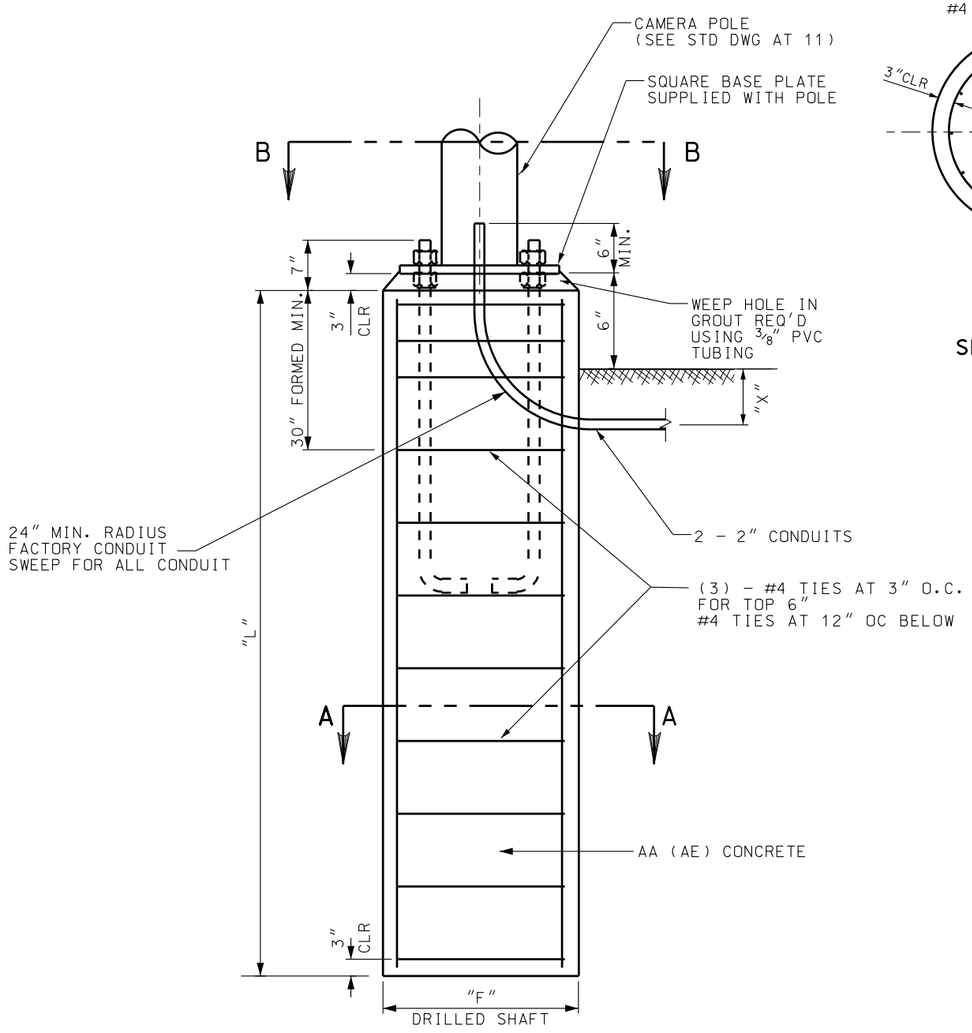

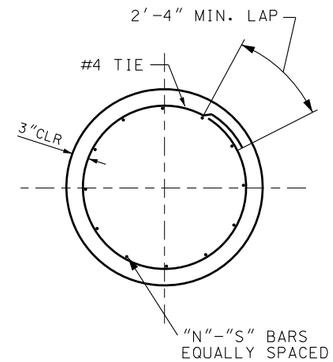

SECTION A-A

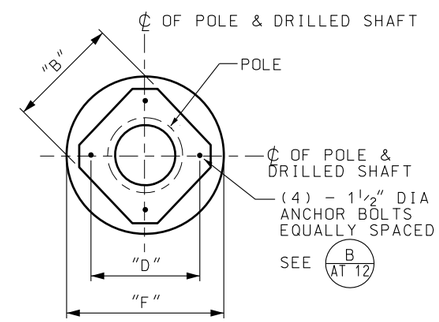

SECTION B-B
FOR 45' POLES

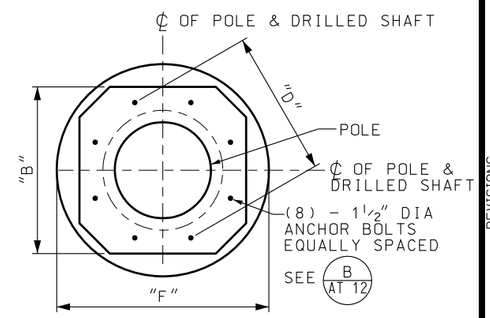

SECTION B-B
FOR 60' & 80' POLES

DRILLED SHAFT FOUNDATION DETAILS

TABLE 2 - POLE FOUNDATION DIMENSIONS

DESCRIPTION	"B"	"D"	"F"	"L"	"N"	"S"
45' NON LOWERING POLE	21.0	21.0	36"	9'-6"	12	#6
45' CAMERA LOWERING POLE	22.0	22.5	36"	10'-0"	12	#6
60' CAMERA LOWERING POLE	33.0	29.0	42"	11'-6"	16	#6
80' CAMERA LOWERING POLE	33.0	29.0	42"	15'-0"	16	#6

TABLE 1 - CONDUIT DEPTH "X"

18"	IF ENTERING ADJACENT JUNCTION BOX
AS REQUIRED BY TABLE 2 OF AT 6	IF NO ADJACENT JUNCTION BOX WITHIN 20 FEET OF POLE

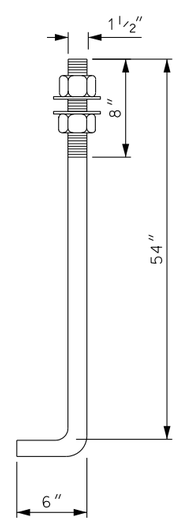

A AT 12 CCTV POLE FOUNDATION

B AT 12 ANCHOR BOLT DETAIL

NOTE:
1. USE STEEL ANCHOR BOLT TEMPLATES, TOP AND BOTTOM.

REVISIONS

NO.	DATE	APPR.	REMARKS
1	2/24/05	S.S.	TIE SIZE CORRECTED.
2	6/27/07	T.J.M	CAMERA LOWERING POLE FOUNDATION ADDED

UTAH DEPARTMENT OF TRANSPORTATION
STANDARD DRAWINGS FOR ROAD AND BRIDGE CONSTRUCTION
SALT LAKE CITY, UTAH

RECOMMENDED FOR APPROVAL — FEB.24,2005 DATE
CHAIRMAN STANDARDS COMMITTEE APPROVED — FEB.24,2005 DATE
DEPUTY DIRECTOR

CCTV POLE FOUNDATIONS FOR CCTV POLES
STANDARD DRAWING TITLE

STD DWG
AT 12

DGN File: G:\StandardsandSpecsSection\Standards Committee\MeetingFiles\2007\14-August30,07Mtg\Incoming\st12.dgn
13-AUG-2007

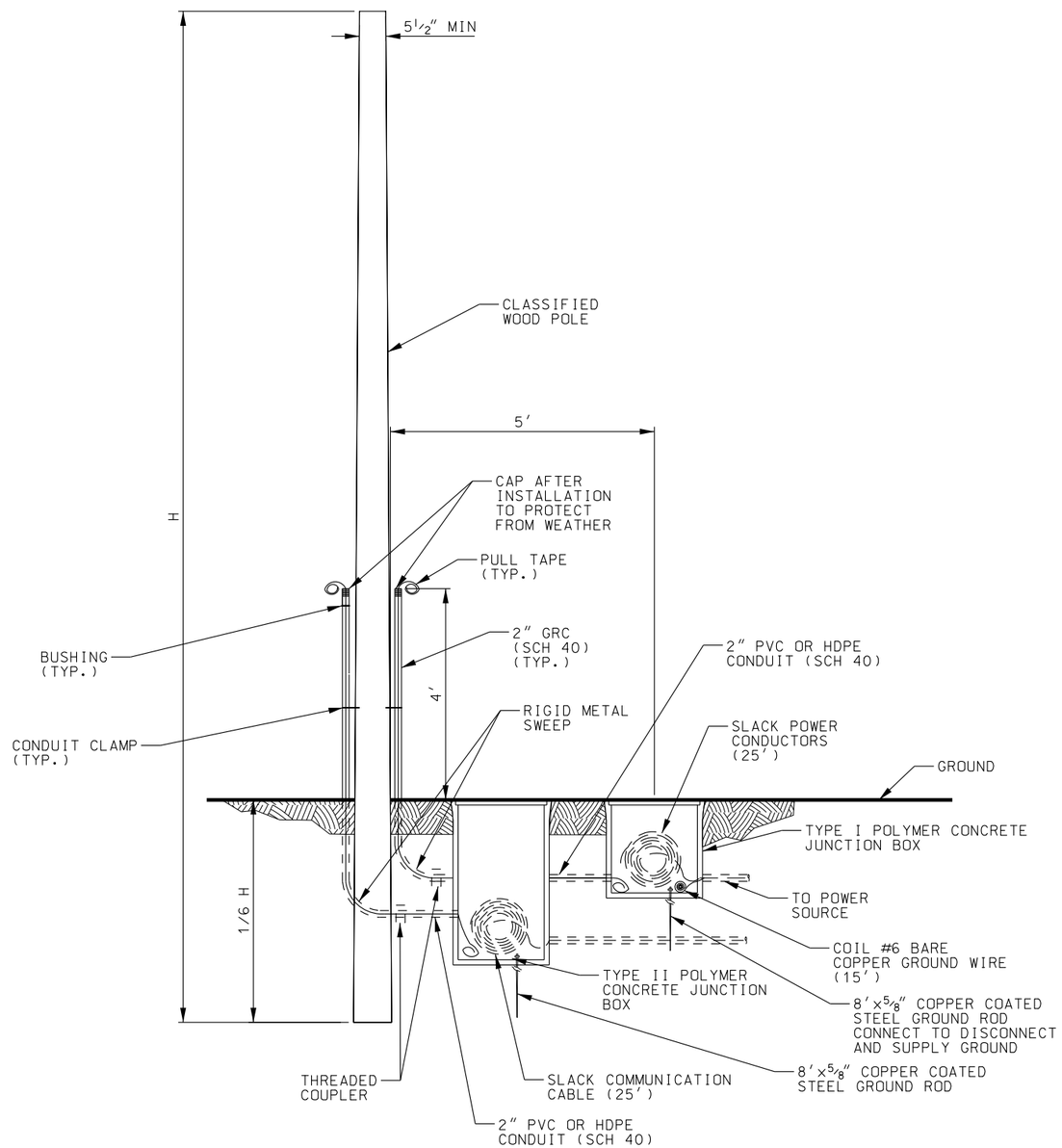

A / AT 13 HAR POLE DETAIL

NOTES:

1. SIZE POLE DIAMETER PER HAR VENDOR RECOMMENDATIONS, ACCOMODATING ALL EQUIPMENT ATTACHMENTS.
2. LOCATE POLE OUTSIDE AASHTO CLEAR ZONE OR SHEILD PER THE CURRENT EDITION OF THE AASHTO ROADSIDE DESIGN GUIDE.

REVISIONS

NO.	DATE	APPR.	REMARKS

UTAH DEPARTMENT OF TRANSPORTATION
STANDARD DRAWINGS FOR ROAD AND BRIDGE CONSTRUCTION
SALT LAKE CITY, UTAH

RECOMMENDED FOR APPROVAL — FEB.23,2006 DATE
CHAIRMAN STANDARDS COMMITTEE APPROVED — DATE
DEPUTY DIRECTOR — FEB.23,2006 DATE

HAR POLE DETAIL
STANDARD DRAWING TITLE

STD DWG
AT 13

DGN File: Q:\StandardsandSpecsSection\Standards Committee\MeetingFiles\2007\4-August30,07Mtg\Incoming\at13.dgn
13-AUG-2007

Standards Committee Submittal Sheet

Name of preparer: Jason Richins & Todd Mac Gillvray
Title/Position of preparer: Sr. Structures Engineer & ATMS Senior Engineer
Specification/Drawing/Item Title: Overhead Sign Structure & Variable Message Sign
Specification/Drawing Number: 02893 & 13557

Enter appropriate priority level: 4
(See last page for explanation) **2008**

Sheet not required on editorial or minor changes to standards. Check with Standards Section.

NOTES:

1. All Submittal Sheets must be completed and sent to the Standards and Specifications Section by the Standards Committee suspense date as shown on the Web. (http://www.udot.utah.gov/index.php/m=c/tid=303)
2. The Preparer of the Submittal Sheet or the Standards Committee member (or authorized substitute) responsible for the submittal must be present at the Standards Committee meeting and capable of discussing and answering all questions related to the submittal. The item will be postponed to a later meeting if one of these people is not present.
3. Notify the Standards and Specifications Section immediately of any changes that impact the presentation to include absence of sponsor or delay in presentation.

Complete the following: (Use additional pages as needed.)

A. Why? Detail the reason for changing the Standard (Specification or Drawing), what has initiated a new Standard, or what has caused a new or changed item of interest.

There aren't many differences in the sign structures for overhead freeway signs and VMS signs. Structures recently came out with a cantilever sign structure standard. It makes sense to pull the sign structure out of the VMS and Sign standards and make one that would work in both cases.

B. How is Measurement and Payment handled? Existing (from the measurement and payment document), modified, or new measurement and payment to be included with all Standard Specifications or Supplemental Specifications.

New measurement and payment with the same items that were in the other specifications.

028930010 24" Overhead Sign Structure Each
Includes all labor, equipment, materials, and incidental items necessary to provide and install the Overhead Sign structure where specified in the contract. Includes all work associated with development, review, and verification of Shop Drawings and Overhead Sign structural design items. Includes VMS Catwalk.

028930020 48" Overhead Sign Foundation Each
Includes all labor, equipment, materials, and incidental items necessary to provide Overhead Sign Foundations. Includes conduit steel reinforcement, anchor bolt templates, and grounding materials associated with the Overhead Sign Foundation.

C. Stakeholder Notification for AGC and ACEC:

By email provide the AGC and ACEC Standards Committee member a copy of all pertinent information relating to the specification or drawing. Detail all responses below. Indicate if no comments were received.

Note: There is a two-week response time set for this item.

Refer to the Standards Committee Web site, Members page at http://www.udot.utah.gov/index.php/m=c/tid=659 for the respective e-mail addresses.

AGC Comments: (Use as much space as necessary.)

Eric Wells, with Granite, reviewed them and there were no comments.

ACEC Comments: (Use as much space as necessary.)

Tyler Yorgason with Civil Science had the following comments.

Section 02893
What are the references U. & V.
2.2 B. * 2.1 E is not a "Section"
3.1 B. & 3.2 A. say the same thing *"excavate" seems an odd term for drilled shafts. I would suggest 3.1 B. just say "Refer to Section 02466" and probably be at the end of the list. I would also suggest that 3.2 A. be deleted. Anything attempting to be covered here seems to be covered under C.

U & V are the welding standards.
2.2 B I changed the call out.
3.1 B Was moved and reworded as suggested.
3.2 A Was deleted.

Section 13557
Same general comment * get rid of "Definitions" article.
Article 3.6 should be in part 1 to be consistent with other standard sections.

"1.4 Definitions" is a required article as per UDOT Specification Writers' Guide.
3.6 Is consistent with the other VMS Standards. If we change it here we need to change all of the other VMS standards.

D. Stakeholders? From the list provided, document the stakeholders contacted, detailing: the company, name of contact, how contacted (by phone, email, hard copy, or in person), concerns, and comments of the change. Stakeholders:

Note: There is a two-week response time set for this item. Allow Stakeholders two weeks to process and respond to coordination requests. All areas should try to complete review and comment as soon as possible but within two weeks.

In-house (for example, preconstruction, materials, construction, safety, design, maintenance) (Include all applicable in-house areas even if not listed above.)

CONTACTED BY EMAIL

Region 1

Materials Eng Rodney Terry	Asked if there were any changes needed to minimum Sampling and Testing Guide. None are anticipated at this time.
District Eng. Kevin Griffin	Left phone message
District Eng. Denis Simper	No Comments
Precon. Eng. Rex Harris	Left phone message

Region 2

Region Materials Eng John Butterfield	Left phone message
District Eng Betty Purdie	Left phone message
District Eng Rob Wight	from Michelle Page 1.5.A had a bit of a redundancy in A and A.1; Consider "A. Shop Drawings" and then at the end of A.1 tack on "for all fabricated materials." These changes were made.
Precon. Eng. Bill Lawerence	No Comments

Region 3

Materials Eng Jim Cox	No Comment
District Eng. Bob Westover	No Comments
District Eng. Scott Andrus	On 13557, there are still references to foundations, etc, if it pertains only to the VMS board this still needs some work as it is now it's somewhat confusing. The titles were left in and there is a reference that references the overhead sign structures. It is hard to see the reference for the redlines.
Precon. Eng. Brent Schvaneveldt	No Comments

Region 4

Materials Eng Larry Gay	
District Eng. Hugh Kirkham	
District Eng. Robert Dowell	No Comments
District Eng. Jim McConnell	
Precon Eng. Mike Miles	OK for him
Steve Ogden	No Comments

Complex

Safety Larry Montoya	2.2 A.1.a change to “T-shape and Z-shape members.” 3.2.c.2 change “6” to “12” and add “finish” before “ground surface.” 3.3.F add “non-paper” before ”material”.
Structures Boyd Wheeler	Many comments throughout the revisions.

Materials Degen Lewis Many comments throughout the revisions.

Construction Engineers

Todd Mac Gillvray Comments are included at the end of this document.

Contractors (Any additional contacts beyond "C" above.)

Suppliers

Leighton Jensen from Universal Industrial Sales, overhead sign fabricator, had the following comments;

"Really the only critical one is the pipe requirement - if the spec. only calls out ASTM A 53 grade B then we are really limited on what can be used. Most all of our other states will allow A252 Grade 2, A500 Grade B and/or Rolled Plate A36 or equivalent. It is more difficult and/or more expensive to acquire what is currently being called out in the spec. especially with the chemical requirements they are using. We would like to see a few more options for the Pipe/Tubing and not so restrictive chemical requirements (since the chemical part is typically shown to assist with the galvanizing of the structure and does not affect the yield or strength of the pipe). If you would like to further discuss this please call and talk with our purchasing department (Karl Johnson 801-785-0505) and he will review this item with you.

Under section D. Structural Tubing & Assoc. Hdwr. - Bullet #3 about the nuts should read grade 2H or DH (DH I believe is the replacement callout for 2H) (Karl could discuss this also with you)."

We looked at ASTM A 252 titled "Standard Specification for Welded and Seamless Steel Pipe Piles." This is a pile specification and at this time, we don't feel it will work for overhead sign structures.

We added ASTM A 500, Grade B. It is also referenced in the AASHTO's Standard Specifications for Structural Supports for Highway Signs, Luminaires and Traffic Signals.

We couldn't find anything in AASHTO or FHWA that says A 36 is ok to use on overhead sign structures. In the past, overhead signs were made without the chemical requirement and we had color variations in the galvanizing. The horizontals go a brown color and the verticals stay silver. It doesn't affect the strength but the sign supports look bad.

Consultants (as required) (Any additional contacts beyond "C" above.)

FHWA (To be accomplished as part of the two-week process before submitting to the Standards and Specifications Section for inclusion on the Standards Committee agenda.) (This is in addition to the requirements of UDOT Policy 08A5-1, procedure 08A5-1.3.)

No comments at this time.

Others (as appropriate)

E. Other impacted areas, systems, or personnel. (Consider all impacts and possible changes to these areas during the preparation process. Coordinate with all appropriate areas for the respective item. List all impacts and action taken.)

1. Minimum Sampling and Testing Guide (MS&T Guide)

We have been working with Degen Lewis, prior Concrete engineer. No changes are anticipated to the MS&T Guide, we may need to double check. (Charpy V-notch)

2. Business Systems (Electronic Bid System, Project Development Business System, Electronic Program Management, Computer-Aided Drafting and Design, etc.)

Minor changes needed.

3. Implementation Plan (Provide detailed instructions on how the subject item will be implemented to include notification of all interested parties and training requirements.)

Our review included multiple people in all the regions. They are aware of the changes.

F. Costs? (Estimates are acceptable.)

1. Additional costs to average bid item price.

May lower the cost due to another test option that can be used. (Added ASTM A 500)

2. Operational (For example, maintenance, materials, equipment, labor, administrative, programming).

New standard should be easier to locate the overhead sign information.

3. Life cycle cost.

No Change.

G. Benefits? (Provide details that can be used to complete a Cost – Benefit Analysis.) (Estimates are acceptable.) (If no costs, what is the benefit of making this change?)

Needed updates were made. Coordinated across divisions (ITS, Safety, Structures & Materials) to work out this standard.

H. Safety Impacts?

Nothing new.

I. History? Address issues relating to the current usage of the item and past reviews, approvals, and/or disapprovals.

Priority Explanation

Enter the appropriate priority in the box on the first page of the document.

Priority 1 Upon posting, this impacts all projects in construction and design with a Change Order, Addenda, and immediate change to projects being advertised.

Priority 2 Upon posting, this impacts projects being advertised.

Priority 3 Upon posting, the approved standard takes effect **four weeks** later for projects being advertised.

UDOT STRUCTURES DIVISION
COMMENT AND RESOLUTION SHEET

CODES:
A. Accept comment—will be corrected, added, or clarified.
B. DESIGNER WILL EVALUATE.
C. DELETE COMMENT
D. DEPARTMENT TO EVALUATE.

DOCUMENT CONTROL NUMBER: SECTION 02893	REVIEW TYPE:	REVIEWER(S): TODD MAC GILLVRAY	DATE: 8/1/07
DESCRIPTION: OVERHEAD SIGN STRUCTURE	DESIGNER: JASON RICHINS	DISCIPLINE: STRUCTURES	CRM:

ITEM NO.	DWG. NO.(1)	COMMENTS	CODE(2)	RESPONSE(2)	FINAL DISPOSITION(3)
1	1.1B	Replace "on the plans" with "in the contract" per Spec Writer's Guide.	A	changed	
2	All	Change date in footer to "January 1, 2008"	A	changed	
3	2.1.B.3.c.	Reword from passive to active voice. Delete "accompanying the anchor bolts" since this is understood. Say "Furnish nuts and washers conforming to …." or "Nuts and washers: Conform to …".	A	changed	
4	2.1.B.3.	Use parallel writing structure for a. through e. by beginning sentences/phrases with verb or subject. Easier to do all verbs in this case.	A	changed	
5	2.1.B.3.e	Reword to active voice and parallel structure. "Remove defects from galvanized steel threads, allowing the free running of nuts by hand along the entire length."	A	changed	
6	2.1.C.4	Reword to active voice. "Perform Charpy V-Notch tests for all…"	A	changed	
7	2.1.C.3	Say "Lock washer all bolts" or "Use lock washers on all bolts" instead, going from passive to active.	A	changed	
8	2.2.B	Refer to "this Section, article 2.1, Materials, paragraph E, All Other Structural Steel." instead. See spec writers guide.	A	Changed as per Barry's direction.	
9	2.1.A	Where is ASTM A 314 used? Haven't seen this material on sign plans, but I could have missed it.	A	They fasten the sign panel to the frame.	
10	3.3	Delete one line before and after article 3.3 heading.	A	changed	
11	3.3.A	Delete one line after 3.3.A..	A	changed	
12	3.3.D	Delete one line after 3.3.D.	A	changed	

SECTION 02893

OVERHEAD SIGN STRUCTURE

PART 1 GENERAL

1.1 SECTION INCLUDES

A. Materials and procedures for installing overhead sign structure.

B. Furnish and install sign connection hardware and catwalk as shown in the contract.

1.2 RELATED SECTIONS

A. ~~Section 02317: Structural Excavation~~

A~~B~~. Section 02466: Drilled Shaft

B~~C~~. Section 03055: Portland Cement Concrete

C~~D~~. Section 03211: Reinforcing Steel and Welded Wire

D~~E~~. Section 03310: Structural Concrete

E~~F~~. Section 05120: Structural Steel

1.3 REFERENCES

~~A. AASHTO M 31: Deformed and Plain Carbon Steel Bars for Concrete Reinforcement~~

A~~B~~. AASHTO M 111: Zinc (Hot-Dipped Galvanized) Coatings on Iron and Steel Products

B~~C~~. AASHTO M 164: High-Strength Bolts for Structural Steel Joints

C~~D~~. AASHTO M 232: Zinc Coating (Hot-Dip) on Iron and Steel Hardware

D~~E~~. AASHTO M 270: Structural Steel for Bridges

~~F. AASHTO M 284: Epoxy-Coated Reinforcing Bars: Materials and Coating Requirements~~

E~~G~~. AASHTO M 291: Carbon and Alloy Steel Nuts

F~~H~~. AASHTO M 293: Hardened Steel Washers

G~~I~~. ASTM A 53: Pipe, Steel, Black and Hot-Dipped, Zinc-Coated, Welded and Seamless

H~~J~~. ASTM A 307: Carbon Steel Bolts and Studs, 60 000 PSI Tensile Strength

I~~K~~. ASTM A 314: Stainless Steel Billets and Bars for Forging

J~~L~~. ASTM A 500: Cold-Formed Welded and Seamless Carbon Steel Structural Tubing in Rounds and Shapes

~~M. ASTM A 513: Electric-Resistance-Welded Carbon and Alloy Steel Mechanical Tubing.~~

~~N. ASTM A 1011: Steel, Sheet and Strip, Hot-Rolled, Carbon, Structural, High-Strength Low-Alloy, High-Strength Low-Alloy with Improved Formability, and Ultra-High Strength~~

K~~O~~. ASTM B 221: Aluminum and Aluminum-Alloy Extruded Bars, Rods, Wire, Profiles, and Tubes

L~~P~~. ASTM B 308: Aluminum-Alloy 6061-T6 Standard Structural Profiles

M~~Q~~. ASTM B 429: Aluminum-Alloy Extruded Structural Pipe and Tube

N~~R~~. ASTM C 1107: Packaged Dry, Hydraulic-Cement Grout (Nonshrink)

O~~S~~. ASTM F 593: Stainless Steel Bolts, Hex Cap Screws, and Studs

P~~T~~. ASTM F 1554: Anchor Bolts, Steel, 36, 55, and 105-ksi Yield Strength

Q~~U~~. AASHTO/AWS D1.5

R~~V~~. AWS D1.1 & D1.2

1.4 DEFINITIONS Not Used

~~Not used.~~

1.5 SUBMITTALS

A. Shop Drawings:
   1. Submit five sets on 11 inch x 17 inch sheets with the department project designation data, drawing number, and sheet number in the lower right corner for all fabricated materials.
   2. All details are subject to modification or approval.
   3. Do not order materials or begin work until receiving final approval of the shop detail drawings.
   4. Do not deviate from the approved shop drawings unless authorized in writing. Contractor is responsible for costs incurred due to faulty detailing or fabrication.
   5. Engineer reserves the right to retain these drawings up to 14 calendar days unless they are submitted electronically in which case 7 calendar days will apply, without granting an increase in the number of working days for the project. This right applies each time the drawings are submitted.

B. Mill Test Report (MTR) for all structural steel and aluminum. Provide item number and name on all materials submittals. Refer to Section 05120.

PART 2 PRODUCTS

2.1 MATERIALS

A. Fasteners: As specified. Meet ASTM A 314, Class 304, 18-8, Stainless Steel.

B. Foundation
   1. Concrete: Class AA(AE). Refer to Sections 03055 and 03310.
   2. Coated Reinforcing Steel: Refer to Section 03211.
   3. Anchor bolts:
      a. Furnish anchor bolts conforming to AASHTO F 1554 grade 55.
      b. Do not weld anchor bolts to reinforcing steel.
      c. Furnish nuts and washers that conform to AASHTO M 291 and M 293 specifications respectively.
      d. Galvanize nuts, washers, and the anchor bolts in accordance with AASHTO M 232.
      e. Remove defects from galvanized steel threads, allowing nuts to be free running by hand the entire length of threads.

C. Structural Steel: General

1. Hot dip galvanize all structural steel after fabrication in accordance with AASHTO M 111. Structural steel may be metallized using electric arc sprayed zinc wire as an alternative.
2. Welding design and fabrication: Where applicable in accordance with the AASHTO/AWS D 1.5 Specifications. Where not applicable in accordance with AWS D 1.1.
3. Galvanize bolts, nuts, and washers in accordance with AASHTO M 232. Use Lock washers on all bolts.
4. Perform Charpy V-Notch tests for all main load carrying tension members with a ½-inch steel thickness or greater. Test results must meet requirements for zone 2.

D. Structural Tubing and Associated Hardware:

1. Use low carbon steel conforming to ASTM A 53 or A 500 Grade B, except use chemical composition requirements of: carbon ≤ 0.25 percent, phosphorus ≤ 0.04 percent, manganese ≤ 1.35 percent, and silicon ≤ 0.05 percent. Conform to ASTM A 53 or A 500 Grade B for other elements.
2. Bolts: Conform to AASHTO M 164 Specifications. Use them at splice plates, mounting assemblies, and vertical supports attaching the sign and catwalk to the mounting assemblies.
3. Nuts: Conform to AASHTO M 291 Specifications, Grade 2H or DH.
4. Washers: Conform to AASHTO M 293 Specifications. Use lock washers on all bolts except, on splice plate connections use direct-tension indicator washers instead.
5. Galvanize bolts, nuts, washers: Conform to AASHTO M 232.

E. All Other Structural Steel:

1. All other shapes and plates: Conform to AASHTO M 270 Grade 36.
2. Bolts: Conform to ASTM A 307 Specifications.
3. Stainless Steel Bolts: Conform to ASTM F 593 Type 304 Specifications.
4. Nuts: Conform to AASHTO M 291 Specifications.
5. Washers: Conform to AASHTO M 293 Specifications. Use lock washers on all bolts.
6. Galvanize bolts, nuts, washers: AASHTO M 232.
7. Entire sign assembly with mounting brackets: Galvanize to AASHTO M 111.

F. Welding design and fabrication: AASHTO/AWS D1.5 or AWS D1.1 specifications.

G. Non-shrink grout: Conform to ASTM C 1107.

2.2 VMS CATWALK

A. Aluminum: General
   1. Use 6061-T6 aluminum in accordance with:
      a. ASTM B 308 for I-beams, H-beams, channels, angles, T-shape, and Z-shape members.
      b. ASTM B 429 for pipe and tube.
   2. Grating: Use 5052 H32 aluminum expanded metal conforming to ASTM B 221 with the size shown in the contract.
   3. Welding: In accordance with the AWS D1.2.

B. Steel: If approved by the Engineer refer to this Section, Article 2.1 Paragraph E.

PART 3 EXECUTION

3.1 PREPARATION

A. Coordinate utility location.

B. Verify the roadway cross-section information, sign dimensions and clearances, shown on the plan before fabrication.

C. Fabricate structural supports and catwalk.

D. Refer to Section 02466.

3.2 OVERHEAD SIGN FOUNDATIONS

A. Anchor Bolts:
   1. Provide anchor bolt template during installation of anchor bolts. Fabricate the bolt template of ¼-inch thick minimum steel plate, similar to anchor plate details. Match drill to each base plate.

B. Earthwork:
   1. Place compacted embankments before drilling.
   2. Forms drilled shaft to 12 inches minimum below finish ground surface. Refer to Section 02466.
   3. Compact backfill to a density equal to surrounding materials, before erecting post.

C. Place Coated Reinforcing:
   1. Place as per Section 02466.

D. Place Concrete:
   1. Place as per Section 02466.

3.3 INSTALLATION - GENERAL

A. Survey and construct foundations to within ± 0.02 ft horizontal and vertical tolerances, establishing base plate elevations in accordance with project plans.

B. Do not remove a sign that is being replaced until the new sign is placed, uncovered and operational.

C. Verify the design height of both vertical supports, and length of horizontal support based on the 'as-built' foundation field survey. Meet vertical clearance requirements during construction. Obtain Engineer's approval for all dimension changes.

D. Review shop-drawings and relate to survey information to assure consistency.

E. Establish proper elevation and orientation of all signs, structures, and verify proper sign post lengths as dictated by construction slopes.

F. Cover signs that require temporary covering with an opaque non-paper material. Secure at the rear of the sign so that the sign is not damaged. Maintain covering until removed.

G. Fill the void between the base plate and top of foundation with a non-shrink grout after completing the sign erection.

H. Structural Pipe:
   1. Provide hand holes for the overhead pipe frame on one side only.
   2. Locate inserts at the bottom of the mast arm. Weld 1 ½-inch diameter insert in each hole. Thread inserts before galvanizing and provide galvanized plugs.
   3. Rake post as necessary during sign erection using leveling nuts to level the sign panels. At final position, create a snug tight condition by wrench tightening both top and bottom anchor bolt nuts against the base plate until full contact is made. Tighten top nuts one-sixth turn past snug tight and retighten lower nuts to maintain full contact.

END OF SECTION

SECTION 13557

VARIABLE MESSAGE SIGN~~ AND SUPPORT~~

~~**Delete Section 13557 and replace with the following:**~~

PART 1 GENERAL

1.1 SECTION INCLUDES

A. Install and test all ~~Department f~~State-Furnished items including VMS sign assembly, VMS access platform, ATMS cabinet, and VMS controller.

B. Furnish, install, and test VMS support structures, sign connection hardware, catwalk, cabinet foundation, communications cable and any additional equipment required. Furnish all incidental items required to provide a complete cable connection between VMS controllers. Test the installed VMS and adjust the viewing angle as required.

1.2 RELATED SECTIONS

A. Section 01554:~~: T~~ Traffic Control

~~B. Section 02466: Drilled Caisson~~B. Section 02893: Overhead Sign Structure

~~C. Section 03055: Portland Cement Concrete~~

~~D. Section 03211: Reinforcing Steel and Welded Wire~~

~~E. Section 03310: Structural Concrete~~

~~F~~C. Section 05120: Structural Steel

D~~G~~. Section 13551: General ATMS Requirements

E. Section 13553: ATMS Conduit

F~~H~~. Section 13554: Polymer Concrete Junction Box

G~~I~~. Section 13555: ATMS Cabinet

HJ. Section 13595: ATMS Integration

1.3 REFERENCES Not Used

~~Not used.~~A. ~~AASHTO M 31: Deformed and Plain Billet-Steel Bars for Concrete Reinforcement~~

~~B. AASHTO M 232: Zinc (Hot-dip Galvanized) on Iron and Steel Hardware (nuts, washers, and anchor bolts)~~

~~C. AASHTO M 270: Carbon and High-Strength Low-Alloy Structural Steel Shapes, Plates, and Bars and Quenched and Tempered Alloy Structural Steel Plates for Bridges~~

~~D. AASHTO M 284: Epoxy Coated Reinforcing Bar~~

~~E. AASHTO M 291: Carbon and Alloy Steel Nuts~~

~~F. AASHTO M 293: Hardened Steel Washers~~

~~G. AASHTO M 314: Standard Specification for Anchor Bolts, Steel, 36, 55, and 105-ksi Yield Strength~~

~~H. AASHTO Standard Specifications for Structural Supports for Highway Signs, Luminaires and Traffic Signals, 4th Edition, 2001, with Interim~~

~~I. ASTM A 53: Pipe, Steel, Black and Hot-Dipped, Zinc-Coated, Welded and Seamless~~

~~J. ASTM A 123: Zinc (Hot-dip Galvanized) Coatings on Iron and Steel Hardware~~

~~K. ASTM A 307: Carbon Steel Bolts and Studs, 60,000 PSI Tensile Strength~~

~~L. ASTM B 221: Aluminum and Aluminum-Alloy Extruded Bars, Rods, Wire, Profiles, and Tubes~~

~~M. ASTM B 308: Aluminum-Alloy 6061-T6 Standard Structural Profiles~~

~~N. ASTM B 429: Aluminum-Alloy Extruded Structural Pipe and Tube~~

~~O. ASTM F 593: Stainless Steel Bolts, Hex Cap Screws, and Studs~~

~~P. ANSI/AASHTO/AWS Structural Welding Code Specifications~~

1.4 DEFINITIONS Not Used

~~Not used.~~

1.~~5~~4 SUBMITTALS

~~A. Mill Certificates for all structural steel. Refer to Section 05120.~~

~~B. Shop Drawings for all structure steel. Refer to Section 05120.~~

~~C~~A. Provide all of the following submittals as described in Section 13551:

1. Contractor Furnished Material and Equipment Lists
2. Test Reports for the Cable & Conductor Test, the Local Field Operations Test, and the ~~Thirty~~ 30 Day ATMS Burn-In Test
3. Completion Notice
4. Compliance Certificate
5. Manufacturer's Equipment Documentation
6. As-Built Drawings with GPS locations

~~D. Provide item number and name on all materials certificates.~~

PART 2 PRODUCTS

2.1 VMS FOUNDATIONS

A. ~~Concrete: Class AA(AE) required. Refer to Sections 03055 and 03310.~~

~~B. Reinforcing Steel: Use coated deformed billet-steel bars in accordance with AASHTO M 284 or ASTM A 123 and AASHTO M 31 Grade 60. Refer to Section 03211.~~

~~C. Anchor Bolts:~~

~~1. In accordance with AASHTO M 314 Grade 36. Refer to AASHTO Standard Specifications for Structural Supports for Highway Signs, Luminaires and Traffic Signals, Section 5.17.~~

~~2. Thread the anchor bolts where shown and allow free running nuts, by hand, for the entire length.~~

~~3. Galvanize the anchor bolts, all nuts and washers, in accordance with AASHTO M 232.~~

~~4. Do not weld anchor bolts to reinforcing steel.~~

~~5. Nuts: Use AASHTO M 291 Specifications.~~

~~6. Washers: Use AASHTO M 293 Specifications.~~Refer to Section 02893.

2.2 JUNCTION BOX

A. Refer to Section 13554.

2.3 VMS SUPPORTS

A. ~~Structural Steel: General~~

~~1. Hot-dip galvanize all structural steel after fabrication in accordance with ASTM A 123. Structural steel may be metallized using electric arc sprayed zinc wire as an alternative.~~

~~2. Welding: In accordance with the ANSI/AASHTO/AWS D1.1 Specifications.~~

~~3. Galvanize all bolts, nuts, and washers in accordance with AASHTO M 232.~~

~~4. Charpy V-Notch tests are required for all main load carrying tension members with a ½ inch steel thickness or greater. Test results must meet requirements for zone 2.~~

~~B. Structural Pipe:~~

~~1. Use low carbon steel conforming to ASTM A 53 Grade B, except use chemical composition requirements of: carbon ≤ 0.25 percent, phosphorus ≤ 0.04 percent, manganese ≤ 1.35 percent, and silicon ≤ 0.05 percent. Use ASTM A 53 Grade B for other elements.~~

~~2. Bolts, nuts, and washers: Refer to Section 05120.~~

~~C. All Other Structural Steel:~~

~~1. All other shapes and plates: Use AASHTO M 270 Grade 36.~~

~~2. Bolts: Use ASTM A 307.~~

~~3. Stainless Steel Bolts: Use ASTM F 593 Type 304.~~

~~4. Nuts: Use AASHTO M 291.~~

~~5. Washers: Use AASHTO M 293. Use lock washers on all bolts.~~

~~6. Galvanize entire sign assembly with mounting brackets: ASTM A 123.~~Refer to Section 02893.

~~2.4 VMS CATWALK~~

~~A. Aluminum: General~~

~~1. Use 6061-T6 aluminum in accordance with:~~

~~a. ASTM B 308 for I-beams, H-beams, channels, angles, tees, and zees.~~

~~b. ASTM B 429 for pipe and tube.~~

~~2. Grating: Use 5052 H32 aluminum expanded metal conforming to ASTM B 221 with the size shown in the contract.~~

~~3. Welding: In accordance with the ANSI/AASHTO/AWS D1.2 Specifications.~~

PART 3 EXECUTION

3.1 PREPARATION

A. Notify the ITS Project Manager at least 14 calendar days before picking up the Overhead VMS display, VMS controller, and VMS cable (fiber optic).

B~~A~~. Load, transport, and install all S~~s~~tate-F~~f~~urnished materials per the manufacturer's instructions and as shown in the contract.

C~~B~~. Provide foundations, VMS supports, junction boxes, ground rod, grounding lug, conduit, and all additional miscellaneous items required for a complete and operational VMS.

D. Deploy traffic control devices, personnel, or both. Refer to Section 01554.

~~C. Install all wiring, conduit, and junction boxes as shown in the contract.~~
~~1. Field locate all conduit and junction boxes to avoid drainage areas and steep slopes whenever possible.~~
~~2. Protect existing conductors while installing cables and conductors.~~
~~3. Install surge suppressors at the VMS Sign Controller and ATMS Cabinet. Minimum specifications for surge suppressors are as follows:~~
~~a. Protects Pairs 1-8~~
~~b. Protects all Pins (8)~~
~~c. Maximum Surge of 100 mA~~
~~d. Turn on at 10 mA~~
~~e. Typical Capacitance of 55 pF~~
~~f. Series Resistance less than 0.02 Ω~~
~~g 0 to 100 percent Humidity~~
~~h. Operates in -40 degrees F (-40 degrees C) to 185 degrees F (85 degrees C) Temperatures~~

~~D. Furnish and install all incidental items, such as wire nuts, grommets, tape connectors, and electrical nuts, necessary to make the VMS system complete.~~

~~E. After installation, the exterior of all equipment must be free of all loose rust and mill scale, dirt, oil, grease and other foreign substances.~~

~~F. Restore work area to the original condition or better after work is completed.~~

3.2 ~~CONSTRUCTION SEQUENCE~~INSTALLATION

A. Install all wiring, conduit, and junction boxes as shown in the contract.
   1. Field locate all conduit and junction boxes to avoid drainage areas and steep slopes whenever possible.
   2. Protect existing conductors while installing cables and conductors.
   3. Install surge suppressors at the VMS Sign Controller and ATMS Cabinet when connected by conductive communications cable. Minimum specifications for surge suppressors are as follows:
      a. Protects Pairs 1-8
      b. Protects all Pins (8)
      c. Maximum Surge of 100 mA
      d. Turn on at 10 mA
      e. Typical Capacitance of 55 pF
      f. Series Resistance less than 0.02 Ω
      g 0 to 100 percent Humidity
      h. Operates in -40 degrees F (-40 degrees C) to 185 degrees F (85 degrees C) Temperatures

B. Remove shipping supports and connect all wiring and cables in a neat and orderly fashion and verify all parts are properly seated and functional.

C. Fabricate structural supports and catwalk and mount the VMS to the steel structure. Follow manufacturer's recommendations for bolt torque requirements and tightening. Refer to Sections 02893 and 05120.

~~A. Deploy traffic control devices and/or personnel. Refer to Section 01554.~~

D. Install $1^1/_2$-inch watertight flexible conduit and fittings between the sign and sign support inserts. Use high-grade silicon seal to ensure a watertight seal around all fittings. Refer to Section 13553.

~~B. Fabricate structural supports and catwalk. Construct foundations, establishing base plate elevations in accordance with project plans. Obtain Engineer's approval for all dimension changes.~~

~~C. Survey the constructed base plate locations, have the Engineer approve their layout before erecting the sign structure, fit the structure to the foundations' anchor bolts, and meet vertical clearance requirements.~~

E. Make final adjustments to sign horizontal and vertical angles. Orient the VMS perpendicular to the viewing angle of motorists 800 feet before the sign. The Engineer may order adjustments to the sign angle during the initial installation.

F. Install power cabling and terminate in VMS cabinet as per plans, details and VMS manufacturer instructions.

G. Furnish and install all incidental items, such as wire nuts, grommets, tape connectors, and electrical nuts, necessary to make the VMS system complete.

H. Install State-Furnished VMS fiber-optic controller cable between VMS and VMS controller in ATMS cabinet.

I. Clear equipment exterior of all loose rust and mill scale, dirt, oil, grease and other foreign substances.

J. Restore work area to the original condition or better after work is completed.

~~D. Remove shipping supports and connect all wiring and cables in a neat and orderly fashion, verify all parts are properly seated and functional and make final adjustments to sign horizontal and vertical angles. Orient the VMS sign perpendicular to the viewing angle of motorists 800 feet before the sign. The Engineer may order adjustments to the sign angle during the initial installation.~~

3.3 VMS FOUNDATIONS

A. ~~Excavation~~

~~1. Perform as described in Sections 02466 and 13551.~~

~~B. Anchor Bolts:~~

~~1. Provide anchor bolt template during installation of anchor bolts. Fabricate the bolt template of ¼ -inch thick minimum steel plate, similar to anchor plate details. Match drill to each base plate.~~

~~2. Fill the void between the base plate and top of foundation with non-shrink grout after completing the sign erection.~~

~~C. Earthwork~~

~~1. Place compacted embankments prior to drilling.~~

~~2. Form caissons to a minimum of 6 inch below the ground surface. Refer to Section 02466. Place compacted backfill before erecting post.~~Refer to Section 02893.

3.4 VMS SUPPORTS

A. ~~Structural Pipe:~~

~~1. Provide hand holes for the overhead pipe frame on one side only.~~

~~2. Locate inserts at the bottom of the mast arm . Weld 1 ½ -inch diameter insert in each hole. Thread inserts before galvanizing and provide galvanized plugs.~~

~~3. Rake post as necessary during sign erection using leveling nuts to level the sign panels. At final position, create a snug tight condition by wrench tightening both top and bottom anchor bolt nuts against the base plate until full contact is made. Tighten top nuts one-sixth turn past snug tight and retighten lower nuts to maintain full contact.~~

~~B. All Other Structural Steel:~~

~~1. Use one sign-mounting bracket at each sign support. See sign fabricator's drawings for number and location of supports (i.e., channels or Z-bracket).~~

~~2. Pre-tension steel rod to 11,000 lbf.~~

~~3. Sign placement on horizontal member may be adjusted up to 3/8 inch upward for VMS platform to match catwalk elevation.~~

~~C. Earthwork:~~

~~1. Place and compact backfill prior to erecting supports.~~Refer to Section 02893.

3.5 ATMS CABINET

A. ~~Install ATMS cabinet according~~Refer to Section 13555.

3.6 TESTING AND ACCEPTANCE

A. Successfully complete the following tests:

1. Cable and Conductor Test: Obtain UDOT's newest version (at time of bid) of the ATMS Cable and Conductor Test from the UDOT Web site. Refer to http://www.udot.utah.gov/go/standardsreferences~~http://www.udot.utah.gov/index.php/m=c/tid=719~~.
2. Local Field Operations Test: Obtain UDOT's newest version (at time of bid) of the Variable Message Sign Local Field Operations Test form from the UDOT Web site. Refer to http://www.udot.utah.gov/go/standardsreferences~~http://www.udot.utah.gov/index.php/m=c/tid=719~~.
   a. Conduct the Local Field Operations test after the Cable and Conductor test has been successfully completed and the Cable and Conductor Test Report has been approved by the Engineer.
   b. Verify physical construction has been completed in accordance with the ~~plans and specifications~~contract and that the connecting cabling has been properly installed.
   c. Furnish all equipment, appliances, and labor necessary for the test.
3. Acceptance Tests: Refer to Section 13595.

END OF SECTION

Standards Committee Submittal Sheet

Name of preparer: Jason Richins
Title/Position of preparer: Structures Design Squad Leader
Specification/Drawing/Item Title: Thin Bonded Polymer Overlay, Modular Expansion Joint, & Water proofing membrane
Specification/Drawing Number: 03372, 05835, & 07105

Enter appropriate priority level:
(See last page for explanation) **3**

Sheet not required on editorial or minor changes to standards. Check with Standards Section.

NOTES:

1. All Submittal Sheets must be completed and sent to the Standards and Specifications Section by the Standards Committee suspense date as shown on the Web. (http://www.udot.utah.gov/index.php/m=c/tid=303)
2. The Preparer of the Submittal Sheet or the Standards Committee member (or authorized substitute) responsible for the submittal must be present at the Standards Committee meeting and capable of discussing and answering all questions related to the submittal. The item will be postponed to a later meeting if one of these people is not present.
3. Notify the Standards and Specifications Section immediately of any changes that impact the presentation to include absence of sponsor or delay in presentation.

Complete the following: (Use additional pages as needed.)

A. Why? Detail the reason for changing the Standard (Specification or Drawing), what has initiated a new Standard, or what has caused a new or changed item of interest.

Thin Bonded Polymer Overlay: We have been including a Special Provision on all projects with a Polymer Overlay. We sat down with Structures Design, Structures Operations and Materials to make any needed changes, and to make it a Standard. We feel comfortable enough with Polymer Overlays that a Standard is needed.

Modular Expansion Joints is a new standard also. The joints that fall under this standard have a wider movement and wouldn't fall under the expansion joint standard. We used the expansion joint standard as a starting point and made changes as per the AASHTO LRFD Construction Specification and the Legacy Highway special.

Waterproofing Membrane is mostly editorial changes. I took out the **low temperature flexibility test** . I searched for two hours to find the test that was referenced. Montana DOT made reference to the same test, but I couldn't find the test method. I suggest we remove it unless someone knows where the test can be found. The suppliers that I found on the internet didn't reference the test either.

B. How is Measurement and Payment handled? Existing (from the measurement and payment document), modified, or new measurement and payment to be included with all Standard Specifications or Supplemental Specifications.

Two new measurement and payment items will need to be created for Thin Bonded Polymer Overlay and Modular Expansion Joints.
Waterproofing Membrane shouldn't have any changes.

C. Stakeholder Notification for AGC and ACEC:

By email provide the AGC and ACEC Standards Committee member a copy of all pertinent information relating to the specification or drawing. Detail all responses below. Indicate if no comments were received.

Note: There is a two-week response time set for this item.

Refer to the Standards Committee Web site, Members page at http://www.udot.utah.gov/index.php/m=c/tid=659 for the respective e-mail addresses.

AGC Comments: (Use as much space as necessary.)

Eric Wells reviewed the Standards and had no comments.

ACEC Comments: (Use as much space as necessary.)

Tyler Yorgason

Section 03372
This section is rather messy and I would suggest it needs a lot of work before going to the Standards Committee. Submittal should always go to the "Engineer" and be absolutely necessary. The only other comment I'm going to offer at this time is that Part 2 Products appears to be mostly Part 3 Execution. Section needs to be rearranged in proper format.

With the help of Patti, this has been reworked. The warranty needs to go to UDOT Bridge Operations, so they can follow it for 5 years. Maybe it could go to the engineer first then to bridge operations. Either way works for me.

Section 05835
2.2 B. - Appears specific to a project and should be reworded
3.10 - Delete "Integrity"
3.8 C. should be rewritten in active voice
3.12 A. conflicts with 3.8 C. when design strength is reached before 72 hours * I would suggest deleting 3.12 A. * if left, drop the word "plan", but I think this is already adequately covered under 1.5 D.

2.2 B was changed, 3.10 was changed, 3.8 C was corrected and added the design strength, then I deleted 3.12 A.

Section 07105
No comments

D. Stakeholders? From the list provided, document the stakeholders contacted, detailing: the company, name of contact, how contacted (by phone, email, hard copy, or in person), concerns, and comments of the change. Stakeholders:

Note: There is a two-week response time set for this item. Allow Stakeholders two weeks to process and respond to coordination requests. All areas should try to complete review and comment as soon as possible but within two weeks.

In-house (for example, preconstruction, materials, construction, safety, design, maintenance) (Include all applicable in-house areas even if not listed above.)

CONTACTED BY EMAIL

Region 1

Materials Eng Rodney Terry	Asked if there were any changes needed to minimum Sampling and Testing Guide. None are anticipated at this time.
District Eng. Kevin Griffin	Left phone message
District Eng. Denis Simper	No Comments
Precon. Eng. Rex Harris	Left phone message

Region 2

Region Materials Eng John Butterfield	Left phone message
District Eng Betty Purdie	Left phone message
District Eng Rob Wight	from Michelle Page; I did not see anything wrong with these specs as far as content. I have used each of them and agree with the changes/comments you have already addressed in them. One thing, 03372's font does not match our standard. These changes will be made.
Precon. Eng. Bill Lawerence	No Comments

Region 3

Materials Eng Jim Cox	They seem okay. How do they correlate with the ones Robert Nash sent out on expansion joints? I replied to him, I based mine off of his Standard and added things that were different to my joints. Mine is for bigger movements 4-10 inches. Bob's is for joints from 2-4 inches.
District Eng. Bob Westover	No Comments
District Eng. Scott Andrus	No Comments on this standard
Precon. Eng. Brent Schvaneveldt	No Comments

Region 4
Materials Eng Larry Gay
District Eng. Hugh Kirkham
District Eng. Robert Dowell No Comments
District Eng. Jim McConnell
Precon Eng. Mike Miles OK for him

Complex
Structures Boyd Wheeler Many comments throughout the revisions.
Materials Degen Lewis Many comments throughout the revisions.

Construction Engineers

Contractors (Any additional contacts beyond "C" above.)

Suppliers

Consultants (as required) (Any additional contacts beyond "C" above.)

FHWA (To be accomplished as part of the two-week process before submitting to the Standards and Specifications Section for inclusion on the Standards Committee agenda.) (This is in addition to the requirements of UDOT Policy 08A5-1, procedure 08A5-1.3.)

No Comments at this time.

Others (as appropriate)

E. Other impacted areas, systems, or personnel. (Consider all impacts and possible changes to these areas during the preparation process. Coordinate with all appropriate areas for the respective item. List all impacts and action taken.)

1. Minimum Sampling and Testing Guide (MS&T Guide)

Most everything is handled by Material Certifications. I am not aware of any needed changes.

2. Business Systems (Electronic Bid System, Project Development Business System, Electronic Program Management, Computer-Aided Drafting and Design, etc.)

Minor changes needed.

3. Implementation Plan (Provide detailed instructions on how the subject item will be implemented to include notification of all interested parties and training requirements.)

Most of the EMII's in the regions were on the review panel. That will help get it out. We will let people know as we are contacted with questions.

F. Costs? (Estimates are acceptable.)

1. Additional costs to average bid item price.

Shouldn't see any changes.

2. Operational (For example, maintenance, materials, equipment, labor, administrative, programming).

3. Life cycle cost.

G. Benefits? (Provide details that can be used to complete a Cost – Benefit Analysis.) (Estimates are acceptable.) (If no costs, what is the benefit of making this change?)

The benefits are that we don't have to add these as specials to every project. They will be in our printed standards so more people will be aware of them.

H. Safety Impacts?

Nothing obvious, these products have been used for many years and it is time for a standard.

I. History? Address issues relating to the current usage of the item and past reviews, approvals, and/or disapprovals.

Priority Explanation

Enter the appropriate priority in the box on the first page of the document.

Priority 1 Upon posting, this impacts all projects in construction and design with a Change Order, Addenda, and immediate change to projects being advertised.

Priority 2 Upon posting, this impacts projects being advertised.

Priority 3 Upon posting, the approved standard takes effect **four weeks** later for projects being advertised.

SECTION 03372

THIN BONDED POLYMER OVERLAY

PART 1 GENERAL

1.1 SECTION INCLUDES

A. Materials and procedures for applying a protective crack treatment and bridge deck overlay using either an epoxy-urethane polymer (Type 1), or a Modified Epoxy polymer (Type 2) with a broadcast aggregate wearing surface.

1.2 RELATED SECTIONS

A. Polymer Overlay System – Apply two layers of a two-part polymer resin after applying the pretreatment and saturate it with a broadcast aggregate before it cures. Mix the polymer using volumetric mixing proportions according to the Manufacturer's recommendations.

1.3 REFERENCES

A. AASHTO T 242: Frictional Properties of Paved Surfaces Using a Full-Scale Tire

B. ASTM C 109: Compressive Strength of Hydraulic Cement Mortars (Using 2-in. or [50 mm] Cube Specimens)

C. ASTM C 501: Relative Resistance to Wear of Unglazed Ceramic Tile by the Taber Abraser

D. ASTM C 566: Total Evaporable Moisture Content of Aggregate by Drying

E. ASTM C 778: Standard Sand

F. ASTM D 570: Water Absorption of Plastics

G. ASTM D 638: Tensile Properties of Plastics

H. ASTM D 790: Flexural Properties of Unreinforced and Reinforced Plastics and Electrical Insulating Materials

I. ASTM D 971: Interfacial Tension of Oil Against Water by the Ring Method

J. ASTM D 2240: Rubber Property – Durometer Hardness

K. ASTM D 4065: Standard Practice for Plastics: Dynamic Mechanical Properties: Determination and Report of Procedures

L. ASTM D 4285: Indicating Oil or Water in Compressed Air

M. American Concrete Institute (ACI)

N. California Test Method

1.4 DEFINITIONS

Polymer Overlay System - A two-part polymer resin system applied as a pretreatment and saturated it with a broadcast aggregate before it cures. The polymer uses volumetric mixing proportions according to the Manufacturer's recommendations.

1.5 SUBMITTALS

A. Manufacturer:
   1. Submit the name of the Manufacturer of the polymer overlay materials and the name and phone number of the Manufacturer's Technical Support Representative at the Pre-Construction Meeting.

B. Certificate of Compliance:
   1. Submit to the Engineer for approval at least 10 days prior to placement a Certificate of Compliance from an independent nationally recognized laboratory stating that the polymer overlay materials meet the requirements listed in Tables 1 - 5 and other material requirements contained in this specification. Additional approval needed for any substitutes.

C. The Manufacturer furnishes at least one-quart sample of each component from each lot to the UDOT laboratory to verify material supplied.

D. Before final acceptance is given, submit a Warranty letter to the UDOT Bridge Operations Engineer stating that the polymer Manufacturer and the Contractor jointly guarantee the wearing surface against all defects incurred during normal traffic for a period of five years, including any delamination or reduced skid resistance less than 40, as measured per AASHTO T 242.
   1. The guarantee period commences on the date of work acceptance, typically the date traffic is allowed on surface.

PART 2 PRODUCTS

2.1 POLYMER OVERLAY MATERIALS

A. Thin Bonded Polymer bridge deck overlay system using either an Epoxy-Urethane (Type 1) co-polymer or modified Epoxy (Type 2) polymer as specified on the plan or detail sheets, which includes all materials, surface preparation, application of a pretreatment for crack filling and bonding, and two coats of a polymer resin broadcast with a high wear, high skid aggregate that chemically cures to provide an impervious wearing surface.

Table 1

PHYSICAL PROPERTIES OF THE POLYMER OVERLAY SYSTEM	
Property	**Value**
Compressive Strength, min. psi	7,000
Tensile Strength, min. psi	2,500
Tensile Elongation, percent min.	35 ±5
Water Absorption, percent by wt. Max.	0.20
Shore D Hardness, 77°F min.	65 ±5
Gel Time, minutes	22-31
Abrasion Resistance, oz., max.	0.003
Adhesion to Concrete	100% failure in concrete
Flexural Creep: Total Movement in 7 days	.0065 inches minimum
Flexural Yield Strength, min. psi	5,000
Percent Solids	100

1. The cured epoxy-urethane system conforms to a load bearing capacity of retaining 85 percent of its original load bearing strength at (tensile strength) as 20 percent strain using ASTM D 638.
2. Type 1 – Epoxy-Urethane Co-Polymer:
   a. Provide Polymer resins consisting of a blend of epoxy and urethane materials that meet the physical requirements outlined in other parts of this Section.
   b. The polymer overlay is to be free of any fillers, volatile solvents and the use of external/conventional flexiblizers is not permitted.
   c. The use of metered mixing equipment as outlined in other parts of this Section is required with the use of this material.
   d. In general, the use of a Type 1 polymer (with equipment) is intended for high wear conditions and rapid construction schedules, and is acceptable for use on all bridge deck environments.
3. Type 2 – Modified Epoxy Polymer:
   a. Provide Polymer resins consisting of modified epoxy materials that meet the physical requirements outlined in other parts of this Section.

b. The use of additives, fillers, volatile solvents, and flexiblizers to modify the physical properties of the epoxy to meet physical requirements are acceptable.

c. The use of metered mixing equipment as outlined in other parts of this Section is NOT required with the use of this material but is highly recommended.

d. Limit the use of a Type 2 polymer to low wear conditions, and moderate construction schedules.

e. For projects specifying a Type 2 (Modified Epoxy) polymer, a Type 1 (epoxy-urethane) polymer may be substituted for the Type 2 polymer.

4. The modulus of the cured polymer system complies with the requirements of Table 2, using a variable temperature Dynamic Mechanical Analysis (DMA) at a frequency of 1 HZ with a 0.3 percent strain using ASTM D 4065.

Table 2

VISCO-ELASTIC PROPERTIES OF THE POLYMER OVERLAY SYSTEM		
TEMPERATURE	**STORAGE MODULUS Psi**	**LOSS MODULUS psi**
14°F	$1.45X10^5$	$8.70X10^3$
68°F	$1.01X10^5$	$1.30X10^4$
122°F	$5.80X10^3$	$4.35X10^3$
140°F	$1.45X10^3$	$1.01X10^3$
158°F	$8.70X10^2$	$2.90X10^2$

B. Steel Shot Blast recommended by Manufacturer.

C. Pretreatment and Crack Filler to comply with the physical properties in Table 1

Table 3

PHYSICAL PROPERTIES OF THE PRETREATMENT SYSTEM	
Property	**Value**
Compressive Strength, min. psi	5,500 – 6,000
Tensile Strength, min. psi	3,100 – 3,400
Tensile Elongation, percent min.	35 ±5
Water Absorption, percent by wt. Max.	<0.10
Shore D Hardness, 77°F min.	70 ±5
Gel Time, minutes	48-52 (7 oz.)
Adhesion to Concrete	100% failure in concrete
Surface tension	Less than 0.0012 pounds/in^3
Percent Solids	100

D. Material Requirements: Meet the properties specified in the tables of this Section and other sections of this specification, and also meet the following correspondence tests for quality control:

1. Compressive Strength: Refer to ASTM C 109
   a. Thoroughly mix the two components of the resin in their appropriate ratios.
   b. Add two volumes of graded silica sand in accordance with ASTM C 778 to one volume of mixed resin.
   c. Prepare the samples according to the requirements of ASTM C 109 and cure for 7 days at 73° ±4°F.
2. Tensile Strength and Elongation:
   a. Cure samples at 73°F ±4°F and 50 ±5 percent relative humidity. Refer to ASTM D 638 for specimen Type I or Type II.
   b. Speed of testing: 0.5 inch/min.

3. Water Absorption:
   a. Prepare sample specimens according to ASTM D 570 Section 4.1 and cure at 73°F ±4°F and 50 ±5 percent relative humidity. Refer to ASTM D 570.
   b. Perform tests as per Section 6.1 ASTM D 570
4. Shore D Hardness:
   a. Prepare specimen per ASTM D 570 Section 4.1 and cure at 73°F ±4°F. Refer to ASTM D 2240.
5. Gel Time: Determine gel time using the following procedure:
   a. Measure 4 oz. of Part A and 2 oz. of Part B each at 77°F, into an unwaxed paper cup and record the time and mix immediately
   b. Pour 3.5 oz. of this mixture into a 6 oz. unwaxed paper cup and placed on a wooden bench top.
   c. Starting 20 minutes from the time recorded above, probe the mixture every 2 minutes with a small stick until a small ball forms in the center of the container.
   d. Consider the gel time as the total time, including mixing, required for the ball to form.
   e. Perform the test in a room or enclosed area maintained at 77°F ±4°F and 50 ±5 percent relative humidity.
6. Abrasion Resistance: Tests to be done using a CS-17 wheel and a 2.2 pound load for 1,000 cycles. Refer to ASTM C 501.
7. Adhesion to Concrete: ACI-503-R, Pull Out Test.
8. Flexural Creep: California Test Method 419.
9. Flexural Yield Strength: ASTM D 790.
10. Surface Tension: ASTM D 971.

E. Aggregate

1. Non-friable, non-polishing, clean, and free of surface moisture.

2. Proven record of durability in this type of application.
3. 100 percent of the aggregate has at least one mechanically fractured face for materials being retained on the #10 sieve.
4. Thoroughly washed, kiln dried to maximum moisture content of 0.2 percent by weight per ASTM C 566.
5. Washington Stone is recommended.
6. Use alternate aggregates with Manufacturer's and Engineer's approval.
7. Meet the physical properties of Table 4 and Table 5:

Table 4

AGGREGATE PROPERTIES	
GLACIAL GRAVEL	**BASALT QUARTZITE GRANITE (% by Weight)**
$Si0_2$	75.03
Al_2O_3	11.49
Fe_2O_3	3.57
CaO	2.84
MgO	1.59
SO_3	0.08
Na_2O	2.58
K_2O	0.99
Combined Alkali	3.20
Ignition Loss	1.72
Mohs Scale Hardness	6.50
ASTM 566 (water absorption)	0.2%

Table 5

AGGREGATE GRADATION	
Sieve Size	**Percent Passing**
0.187 in; No.6	100
0.078 in; No.10	10 – 35
0.033 in; No.20	0 – 10

PART 3 EXECUTION

3.1 SURFACE PREPARATION

A. Pothole Patching
   1. Repair any minor deck surface potholes prior to installation of the polymer system using a cementitious patching material that meets other specifications and is compatible with the polymer system being used.
   2. Use polymer patching materials for potholes less than 2 inches in depth and in accordance with the Manufacturer's and Engineer's recommendations.
   3. Include any costs associated with the surface defects and pothole repairs less than 1 inch in depth in the Bid Item for the Polymer Overlay System.

B. Shot-Blasting
   1. Clean the entire concrete deck surface with steel shot blast to remove any oil, dirt, rubber, or other materials that may be detrimental to the polymer overlay bonding and curing according to the Manufacturer recommendations. Refer to ASTM D 4285.

C. Curbs
   1. Sandblasting equipment or mechanical grinders are permitted with approval of the Manufacturer and Engineer in areas that cannot be reached with the steel shot-blasting.

D. Traffic
   1. Traffic is not allowed on any portion of the deck that has been shot-blasted.
   2. Overlay equipment will be allowed on cleaned surfaces with Manufacturer's supervision.

E. Weather
   1. All treated surfaces are to be dry at the time of application.
   2. Do not apply the polymer overlay system when it has rained within 24 hours or is expected to rain within 8 hours.
   3. Moisture content in the concrete substrate is not to exceed 4.5 percent when measured by an electronic meter.
   4. The minimum recommended temperature is 50°F and increasing.

F. Surfacing Window
   1. Do not apply polymer overlays before April 15, or after September 30.

3.2 APPLICATION

A. Check the Concrete Surface
   1. Clean the concrete surface and apply a two-component pretreatment and Polymer Overlay Systems to the bridge deck to fill minor cracks and increase the bond strength between the overlay and the deck surfaces according to the Manufacturer's specifications.

B. Use Metered Mixing Equipment for Type 1 Polymers (optional for Type 2 Polymers)
   1. Use special equipment capable of metering, mixing and distributing the polymer.
   2. Use owner operated machinery that is approved by the polymer Manufacturer.
   3. Use an application machine that features positive displacement volumetric metering pumps controlled by a hydraulic power unit.
   4. Store components in temperature controlled reservoirs capable of maintaining 100°F ±10°F to insure optimum mixing.
   5. Check mixing ratio at the pump outlets as well as cycle counting capabilities to monitor output on standard features.
   6. Use motionless in-line mixing so as to not overly shear the material or entrap air in the mix.
   7. Maximize material working time by mixing it immediately before dispensing.

C. Verify the Thickness of Individual Layers
   1. Manufacture recommends the number of layers and the application rates of the liquid in the various layers in order to achieve a minimum overlay thickness of 0.375 inch.

D. First Layer
   1. Manually or mechanically measure and mix the components and evenly distribute the liquid on the clean, dry deck surface at the rate recommended by the Manufacturer.
   2. Wet the entire deck surface and allow 1-2 hours for the liquid to achieve full depth penetration into cracks as well as adequately encapsulate any steel grid.
   3. Evenly broadcast medium size coarse silica sand after the liquid is allowed to penetrate and apply subsequent application after 8-12 hours.

E. Second Layer
   1. Completely remove excess or loose aggregate from the previous coat by vacuum or with compressed air prior to the application.

2. Mix the components with the mechanical application equipment and evenly distribute the liquid on the clean, dry deck surface at the rate recommended by the Manufacturer.

F. Time Limits For Aggregate

1. Use the following maximum time allowed between the first and second coat of liquid before broadcasting the aggregate:

Above 90°F	10 minutes
80°F to 90°F	15 minutes
70°F to 80°F	20 minutes
60°F to 70°F	25 minutes
50°F to 60°F	35 minutes

G. Broadcasting Aggregate

1. Use truck-mounted equipment capable of dispensing the aggregate onto the deck in a uniform manner as directed or approved by the Manufacturer.
2. Broadcast the aggregate to cover the surface so that no wet spots appear and before the polymer begins to gel.
3. Drop the aggregate vertically so the level of the liquid is not disturbed.
4. Broadcast the aggregate in the first and second layers of the liquid according to Table 4 and Table 5 to saturate until no wet spots remain.

H. Remove Excess Aggregate

1. Remove all loose and excess aggregate after the overlay has hardened and before applying subsequent coats using a power vacuum or other method.

I. Longitudinal Joints in the Overlay

1. Stagger and overlap joints between successive coats so that no ridges appear between two adjacent lanes.

J. Traffic

1. Allow traffic on the final layer or in between layers after the resin has cured as determined by the Manufacturer and after removal of all excess and loose aggregate.

K. Job Site Material Storage

1. Store on the job site in a dry, weather protected facility away from moisture and maintain the material within the temperature range of 50-100 degrees F or as per Manufacturer's recommendations, during transport to the job site and in the application machine tanks.

L. Handling Liquid Materials on the Job
   1. Provide protective gloves, clothing, boots, and goggles to workers and inspectors directly exposed to the material.
   2. Provide product safety data sheets to all workers and inspectors as obtained from the Manufacturer.

M. Aggregate
   1. Store all aggregate in a dry, moisture-free atmosphere.
   2. Fully protect the aggregate from any contaminants on the job site and stored to not be exposed to rain or other moisture sources.

3.3 QUALITY CONTROL

A. Technical Support Representative:
   1. Manufacturer's representative is on the job site at all times and may consult with the Engineer to suspend any item of work that is suspect and does not meet the requirements of this Section.
   2. Work may resume only after the Manufacturer's representative and the Engineer are satisfied that the Contractor has taken appropriate remedial action.

B. Prior Performance:
   1. The selected material must have a satisfactory performance in Utah or at least 2-years from the time of placement.
   2. Products without a 2-year prior satisfactory performance will be considered as experimental, should not be used for bidding purposes, and will only be considered for use with the approval of the Engineer after the award of the contract.

C. Packing Requirement:
   1. Pack all materials in strong, substantial containers.
   2. Identify the containers as Part A and Part B and plainly mark with:
      a. Manufacturer's name
      b. Manufacturer's address
      c. Name of the product
      d. Mixing proportions and instructions
      e. Lot and batch numbers
      f. Date of manufacture
      g. Quantity contained therein

END OF SECTION

SECTION 05835

MODULAR EXPANSION JOINT

PART 1 GENERAL

1.1 SECTION INCLUDES

A. Install new modular expansion joint system and recessed parapet cover plate.

B. Remove existing expansion joint system from bridge deck and install new modular expansion joint system and recessed parapet cover plate.

1.2 RELATED SECTIONS

A. Section 03055: Portland Cement Concrete

B. Section 03211: Reinforcing Steel and Welded Wire

C. Section 03310: Structural Concrete

D. Section 03392: Penetrating Concrete Sealer

E. Section 05120: Structural Steel

1.3 REFERENCES

A. AASHTO M 111: Zinc (Hot-Dip Galvanized) Coatings on Iron and Steel Products

B. AASHTO M 164: High-Strength Bolts for Structural Steel Joints

C. AASHTO M 232: Zinc Coating (Hot-Dip) on Iron and Steel Hardware

D. AASHTO M 235: Epoxy Resin Adhesives

E. AASHTO M 270: Structural Steel for Bridges

F. AASHTO M 291: Carbon and Alloy Steel Nuts

G. AASHTO M 293: Hardened Steel Washers

H. ASTM C 578: Rigid, Cellular Polystyrene Thermal Insulation

I. ASTM D 395: Rubber Property-Compression Set

J. ASTM D 412: Vulcanized Rubber and Thermoplastic Rubbers and Thermoplastic Elastomers-Tension

K. ASTM D 471: Rubber Property-Effect of Liquids

L. ASTM D 573: Rubber-Deterioration in an Air Oven

M. ASTM D 1149: Rubber Deterioration-Surface Ozone Cracking in a Chamber

N. ASTM D 2240: Rubber Property-Durometer Hardness

O. AASHTO/AWS D 1.5

P. AASHTO LRFD Bridge Design Specifications

Q. American Institute of Steel Construction (AISC)

1.4 DEFINITIONS **Not Used**

~~Not Used~~

1.5 SUBMITTALS

A. Shop drawing requirements: Comply with Section 05120. Shop drawings and calculations shall be stamped and signed by an engineer who is registered as a Professional Engineer in the State of Utah. The calculations shall include a fatigue design and a load factor design for all structural elements, connections and splices.

B. Certification: Comply with Section 05120, except that AISC, Simple Steel Bridge Structures (SBR) Certification is required.

C. Show complete details for the joint seal assembly, anchorage components, and method of installation to be followed. Include the concrete recess details and any required revisions or additions to concrete, reinforcement, structural steel or other components.

D. Temporary bridging plan for any Modular Expansion Joint for which construction traffic is anticipated following installation.

E. Mill Test Report (MTR) for all structural steel. Provide item number and name on all materials submittals. Refer to Section 05120.

PART 2 PRODUCTS

2.1 MATERIALS

A. Portland Cement Concrete: Class AA(AE). Refer to Section 03055.

B. Cement: Refer to Section 03055.

C. Structural Steel: Galvanized all structural steel as per AASHTO M 111 except where stainless steel and those surfaces coated with PTFE.
   1. Steel Extrusions: AASHTO M 270, Grade 36.
   2. Plates: AASHTO M 270, Grade 36.
   3. Round Bars: AASHTO M 270, Grade 36.
   4. Shear Studs: AASHTO M 270, Grade 36.
   5. Weld: AASHTO/AWS D1.5.

D. Bolts, Nuts, and Washers: Galvanize as per AASHTO M 232.
   1. Bolts: AASHTO M 164.
   2. Nuts: AASHTO M 291.
   3. Washers: AASHTO M 293.

E. Lubricating Material: Follow manufacturer recommendation.

F. Epoxy Resin Adhesive: Follow AASHTO M 235.
   1. Type II.
   2. Choose class rating consistent with the application temperature.

G. Reinforcing Steel (Coated): Refer to Section 03211.

H. Rigid Plastic Foam: Type 9, density of 2 lb~~s~~/ft^3. ASTM C 578.

I. Neoprene Gland: Single convolution type with the following physical properties:

Table 1

Property Method	Requirements	ASTM
Tensile Strength, min. psi	2,000	D 412
Elongation at break, min. percent	250	D 412
Hardness, Type A Durometer (modified)	55 ± 5	D 2240
Compression Set, 70 hr. at 212 degrees F. Method B (modified)	40 percent	D 395
Oven Aging, 70 hr. at 212 degrees F. Tensile Strength. Loss, max. Elongation, loss, max.	 20 percent 20 percent	D 573
Hardness, Type A Durometer (points change)	0 to + 10	D 2240
Oil Swell, ASTM Oil 3, 70 hr at 212 degrees F. Weight Change, max	45 percent	D 471
Ozone Resistance, 20 percent Strain, 300 pphm in air 70 hr. at 104 degrees F. (modified)	No cracks	D 1149

2.2 JOINT SYSTEMS

A. Use only one modular expansion joint system on any single project.

B. The following systems are acceptable: ~~for this project and are detailed in the plans.~~

1. D. S. Brown Modular Expansion Joint Systems.
2. Watson Bowman Acme Modular Expansion Joint Systems.

C. The transverse separation beams, support bars, and other structural elements are to be fatigue tested and designed following the guidelines provided in the current edition of the AASHTO LRFD Bridge Design Specification.

PART 3 EXECUTION

3.1 FABRICATION

A. For Modular Expansion Joint: Comply with Section 05120 except AISC, SBR Certification is required.

B. After fabrication of the expansion joint and anchorage system, check the gland face and top of the extruded steel shape of each section for straightness. Use a string line stretched taut from curb angle point to curb angle point.

C. Shop Tolerances:
   1. Steel surfaces are not to deviate from the string line by more than ~~1/8~~ $\frac{1}{8}$ inch.
   2. No surface is to deviate more than $^{3}/_{32}$ inch when the string line is stretched between either end or crown point and the point of maximum departure from true.

3.2 PREPARATION FOR MODULAR EXPANSION JOINT MODIFICATION

A. Asphalt Removal
   1. Make saw cuts parallel to existing joints to define the removal area.
   2. Remove asphalt surfacing in such a manner that the concrete deck is not damaged.

B. Concrete Saw Cuts
   1. Place the saw cuts at the offset shown on the plans and saw 1 inch deep in the concrete deck parallel to existing joints to define work area.

C. Prevent debris from falling into streams, pedestrian areas, and traffic areas and on railroad tracks.

3.3 CONCRETE REMOVAL FOR MODULAR EXPANSION JOINT MODIFICATION

A. Use jackhammer method to remove existing concrete.
   1. Partial Depth Removal: Use 30-pound class hand operated jackhammers or smaller.
   2. Full Depth Removal: Use 90-pound class hand operated jackhammers or smaller.
   3. Operate jackhammers at an angle greater than 45 degrees as measured from the deck surface.

B. Parapet:
   1. Remove parapet concrete in the prescribed limits shown on the plans.
   2. Where existing electrical conduit is encountered, protect the conduit from damage.

3.4 REINFORCING STEEL FOR MODULAR EXPANSION JOINT MODIFICATION

A. Existing Reinforcing Steel: Clean steel that remains in place thoroughly of all corrosion and adhering materials by sandblasting.

B. New Reinforcing Steel: Place coated reinforcing steel after sandblasting operations are complete.

3.5 REINFORCING STEEL

A. Form and place reinforcing steel as shown on plans.

3.6 SYSTEM INSTALLATION

A. Install expansion joint system according to the manufacturer's recommendations.

B. A factory-trained representative must be present during setting of the system, placement of concrete, installation of neoprene seal element, and during the watertight integrity test.

C. ~~Ensure~~Verify the assembly provides a smooth riding joint without slapping of components or wheel tire rumble.

3.7 JOINT WIDTH

A. Form the joint width, as shown on the plans, using rigid plastic foam. Anchor securely.

B. Place rigid plastic foam between sections of concrete parapet to maintain separation of sections.

3.8 PLACE CONCRETE

A. Clean concrete and steel surfaces before coating with an epoxy adhesive. Follow adhesive manufacturer's application instructions.

B. Place concrete according to Section 03055 and Section 03310 and apply a penetrating concrete sealer according to Section 03392.

C. Keep ~~No~~ traffic off ~~is allowed on~~ the expansion joint system for 72 hours after placing concrete or until concrete has reached it's design strength.

3.9 INSTALL JOINT GLAND

A. Install the gland after the complete steel extrusion installation to ensure that the length of the joint has a continuous seal.

B. Lubricate the steel extrusion cavity before installing the neoprene gland.

C. Remove the foam used to form the joint opening and any other objects prior to watertight integrity test. Gland convolution should hang freely after installation.

3.10 WATERTIGHT ~~INTEGRITY~~ TEST

A. Joint areas must be capable of holding water for ~~1~~one hour without leaking.

B. If joint areas fail the test, remove any leaking seals, clean steel extrusion grooves, and reinstall the seals.

C. Install new seals when leakage persists.

D. Field Tolerances: Recheck steel surfaces for straightness under shop tolerance requirements after installing joint system in its final position and before placing concrete.

E. Final In-Place Tolerances:
   1. Re-check the extrusion gland face after concrete placement. It is not to deviate from the string line by more than ~~1/4~~¼ inch. The parallel extrusion faces are not to deviate from each other by more than ~~1/8~~⅛ inch at any location.
   2. Place the top of the extrusion to meet the grade requirements shown on the plans.

3.11 RECESSED PARAPET COVER PLATE

A. Place recessed parapet cover plate as shown on plans.

~~3.12 TEMPORARY BRIDGING PLAN~~

~~A. No traffic is allowed on the expansion joint system for 72 hours after placing concrete or until concrete has reached it's design strength.~~

END OF SECTION

SECTION 07105

WATERPROOFING MEMBRANE

PART 1 GENERAL

1.1 SECTION INCLUDES

A. Prepare an entire concrete deck and the approach slabs, or specified structure joint areas for waterproofing membrane.

B. Place waterproofing membrane.

1.2 RELATED SECTIONS

A. Section ~~02751: Partial Depth Repair of Concrete Pavement~~ 03934: Structural Pothole Patching

1.3~~2~~ REFERENCES

A. ASTM C 578: Rigid, Cellular Polystyrene Thermal Insulation

B. ASTM D 5: Penetration of Bituminous Materials

C. ASTM D 36: Softening Point of Bitumen (Ring-and-Ball Apparatus)

D. ASTM D 146: Sampling and Testing Bitumen~~--~~Saturated Felts and Woven Fabrics for Roofing and Waterproofing

E. ASTM D 882: Tensile Properties of Thin Plastic Sheeting

F. ASTM D 3236: Apparent Viscosity of Hot Melt Adhesives and Coating Materials

G. ASTM E 96: Water Vapor Transmission of Materials

H. ASTM E 154: Water Vapor Retarders Used in Contact with Earth Under Concrete Slabs, on Walls, or as Ground Cover

~~I. Vermont DOT: Low Temperature Flexibility Test~~

1.4 DEFINITIONS Not Used

~~NOT USED~~

1.5 SUBMITTALS

A. Manufacturer's product data, specifications, and recommended installation instructions.

1.6~~4~~3 WEATHER LIMITATIONS

A. Do not work during wet conditions or when the deck or ambient air temperatures are below 50 degrees F.

B. Do not apply the membrane unless the deck is surface dry.

1.7~~5~~4 SCHEDULING

A. Notify the Engineer at least one week before installing the membrane.

~~1.6 5 SUBMITTALS~~

~~A. Manufacturer's product data, specifications, and recommended installation instructions.~~

PART 2 PRODUCTS

2.1 HOT POURED POLYMER MEMBRANE

A. Characteristics:
   1. Single Component Elastomeric Material
   2. Applied hot
   3. Spreadable to uniform thickness after cooling
   4. ASTM C 578

B. Mechanical Properties:
   1. Penetration, Max: 100
   2. Pliability, at 10 degrees F: No cracks when bent 180 degrees over a 1-inch mandrel.

2.2 RUBBERIZED ASPHALT MEMBRANE

A. Characteristics:
   1. Laminate Form
   2. Heat Resistant
   3. Self-adhesive surface protected by special release paper

B. Mechanical Properties:

Property	Method	Value
Thickness, inch min.		0.065
Permeance-Perms, grains/sq ft·hr·inhg	ASTM E 96, Method B	0.10
Tensile Strength, psi	ASTM D 882, (modified for 1 inch opening)	50
Elongation, percent	ASTM D 882, (modified for 1 inch opening)	75
Puncture Resistance (Mesh), lb	ASTM E 154	200
Pliability, at -15 degrees F	ASTM D 146	No cracks in mesh or rubberized asphalt when bent 180 degrees over a ~~1/4~~¼ inch mandrel

2.3 PATCHING CONCRETE

A. ~~Subject to Engineer's approval~~Refer to Section 03934~~2751~~.~~Select from the Performance Data Products Listing (PDPL) maintained by the UDOT Research Division.~~

2.4 FIBERGLASS MATTING

A. Weight = 1.5 lb~~s~~/yd^2

2.5 BINDER

A. Compatible with the matting material and conforming to the following requirements:

Property	Method	Value
Penetration, 0.1 mm	ASTM D 5	40-82
Softening point, min.	ASTM D 36	155 degrees F
380 degrees F. viscosity, cps	ASTM D 3236	1000 - 1800

~~Low temperature flexibility, max.~~	~~Vermont DOT (modified)~~	~~0 degrees F~~

PART 3 EXECUTION

3.1 PREPARATION

A. Concrete deck:
   1. Sandblast to remove asphalt and all other foreign material from the entire deck, approach slabs and sides of the parapet for a height of 4 inches above the concrete deck.
   2. Vacuum or use compressed air to remove all dust and loose material from the deck.
   3. Remove all sharp ridges and projections that could puncture the membrane.
   4. Patch holes or spalled areas in the concrete deck with patching concrete to provide a flat deck surface. Refer to Section 0393~~402751~~.

B. Asphalt Surface: When membrane will be placed on an asphalt surface, apply a 1/2 inch layer of Hot Mix Asphalt as shown on the plans to provide a flat deck surface.

C. Joints and Cracks: Bond a 12 inch wide strip of woven fiberglass reinforcing to the deck over cracks and joints greater than $^{3}/_{16}$ inch wide using a compatible binder.

3.2 APPLY MEMBRANE

A. Use either hot poured polymer membrane or rubberized asphalt membrane.

B. Hot pour polymer membrane: Follow manufacturer's recommendations for application temperatures, equipment, and procedures.
   1. Primer: Apply primer according to the instructions of the membrane manufacturer, if required.
   2. Application Rate: Apply at a uniform rate to yield a minimum membrane thickness of $^{3}/_{32}$ inch.
   3. Vertical Surfaces: Apply the membrane on existing vertical surfaces and curb faces to a height 1 inch above that required for the asphalt surfacing overlay without splattering.
   4. Defects: Repair membrane that exhibits pin holes surface blisters, crazing or cracking after cooling.
   5. Protection: Protect the membrane from damage by using asphalt roofing felt (30 lb~~s~~/200 ft^2~~sq ft~~) when asphalt surfacing is not placed within four

hours of placing waterproofing membrane. Observe the following characteristics and procedures when using the asphalt roofing felt:

a. Cover entire surface and lay dust side up.
b. Lay parallel to the centerline of the roadway with a minimum overlap of 4 inches between adjoining sections.
c. Bond overlap with suitable mastic or cement.
d. Place free of wrinkles, bubbles or other defects. Repair any placement defects.

6. Traffic: Allow only necessary rubber tire vehicles on the membrane system.
   a. Do not allow public traffic.
   b. Maintain the roofing material in good condition until covered with pavement.
7. Preparation for overlaying: Do not use a tack or prime coat on the top surface of the asphalt rolled roofing.

C. Rubberized Asphalt Membrane: Follow membrane manufacturer's recommendations for application temperatures, equipment, and procedures.

1. Primer: Use primer furnished by the manufacturer of membrane material. Apply primer to all surfaces to be covered by the membrane according to the manufacturer's recommended procedure and application rate.
2. Placement: Overlap prefabricated membrane strips ~~a minimum of~~at least 4 inches. Place joints such that a shingling effect will be achieved in which water will drain effectively.
3. Bonding: Use hand rollers or other satisfactory pressure apparatus on the membrane to assure firm and uniform contact with the primed surfaces. If necessary to assure a good seal at joints, an adhesive may be required or use a wide tipped torch to cause tackiness.
4. Placement: Place the membrane on the vertical face of the concrete curb to the height of the finished overlay surfacing.
5. Defects: Protect the entire membrane from developing wrinkles, air bubbles, or other placement defects. Patch any torn or cut areas and narrow overlaps using a satisfactory adhesive and a piece of membrane. Extend the patch at least 4 inches beyond any defect. Bond the patch firmly to the surface.
6. Traffic: Allow only necessary rubber tire vehicles on the membrane. Do not allow public traffic. Maintain the membrane in good condition until covered with pavement.
7. Preparation for Overlaying: If required by the membrane manufacturer, apply a bond coat of an acceptable adhesive to the surface of the membrane.

3.3 ASPHALT SURFACING OVERLAY

A. Place required surfacing after the membrane has cured according to manufacturer's recommendations. Deposit, spread, and roll asphalt material so the membrane will not be damaged.

END OF SECTION

Standards Committee Submittal Sheet

Name of preparer: Jason Richins
Title/Position of preparer: Sr. Design Engineer
Specification/Drawing/Item Title: Structural Concrete Repair, Parapet/Parapet End Modification, Structural Pothole Patching, and Sealing Existing Concrete Slope Protection Joints
Specification/Drawing Number: 03924, 03933, 03934, & 07921

Enter appropriate priority level:
(See last page for explanation) **3**

Sheet not required on editorial or minor changes to standards. Check with Standards Section.

NOTES:

1. All Submittal Sheets must be completed and sent to the Standards and Specifications Section by the Standards Committee suspense date as shown on the Web. (http://www.udot.utah.gov/index.php/m=c/tid=303)
2. The Preparer of the Submittal Sheet or the Standards Committee member (or authorized substitute) responsible for the submittal must be present at the Standards Committee meeting and capable of discussing and answering all questions related to the submittal. The item will be postponed to a later meeting if one of these people is not present.
3. Notify the Standards and Specifications Section immediately of any changes that impact the presentation to include absence of sponsor or delay in presentation.

Complete the following: (Use additional pages as needed.)

A. Why? Detail the reason for changing the Standard (Specification or Drawing), what has initiated a new Standard, or what has caused a new or changed item of interest.

03924 Structural Concrete Repair - I will be submitting this as a new standard, because we have updated and combined five standards. (03921, 03922, 03923 & 03935 into 03924)

03933 Parapet/Parapet End Modification - Mostly editorial changes.

03934 Structural Pothole Patching - We added Rapid Setting Repair Mortar and made editorial changes. I believe contractors are using the rapid setting repair mortar now.

07921 Sealing Existing Concrete Slope Protection Joints - We changed the wording to have the contractor mark the existing joints in the presence of the Engineer, instead of having the Engineer mark the joints.

B. How is Measurement and Payment handled? Existing (from the measurement and payment document), modified, or new measurement and payment to be included with all Standard Specifications or Supplemental Specifications.

The measurement and payment items will need to be combined from the five standards to the one standard.
The other three shouldn't have any changes.

C. Stakeholder Notification for AGC and ACEC:

By email provide the AGC and ACEC Standards Committee member a copy of all pertinent information relating to the specification or drawing. Detail all responses below. Indicate if no comments were received.

Note: There is a two-week response time set for this item.

Refer to the Standards Committee Web site, Members page at http://www.udot.utah.gov/index.php/m=c/tid=659 for the respective e-mail addresses.

AGC Comments: (Use as much space as necessary.)

Eric Wells reviewed the Standards and had no comments.

ACEC Comments: (Use as much space as necessary.)

Tyler Yorgason

Sections 02893, 03372, 03924, 03933, 03924, 05835, 07105, 07921, 13557
General comment: At one time there was discussion about adding a standard numbered article for "definitions." Several of these sections include such an article and then have "not used." My understanding is that it was determined not to add a standard article for "Definitions." In some cases, or sections, there may be unique terms needing to be defined, in which case I would say it would be fine to add the article, but not as a standard numbered article. Although I'm sure it will sound like a stretch, it may actually lead to some confusion and somehow be construed as eliminating, or not using Definitions * Section 00570.

Definitions are now required in the current spec writers manual.

Section 03924
No comments - other than it may be better to have the information in article 1.7 moved under 2.1 E.

Change was made.

Section 03933
No comments

Section 03934
3.4 C. "*follow the manufacturer's requirements"
Good catch!

Section 07921
Article 1.4 should be titled "Submittals"
3.3 A. * Looks like need to add the word "as" same as in 3.4 A. to be consistent
Good comments.

D. Stakeholders? From the list provided, document the stakeholders contacted, detailing: the company, name of contact, how contacted (by phone, email, hard copy, or in person), concerns, and comments of the change. Stakeholders:

Note: There is a two-week response time set for this item. Allow Stakeholders two weeks to process and respond to coordination requests. All areas should try to complete review and comment as soon as possible but within two weeks.

In-house (for example, preconstruction, materials, construction, safety, design, maintenance) (Include all applicable in-house areas even if not listed above.)

CONTACTED BY EMAIL
Region 1

Materials Eng Rodney Terry	Asked if there were any changes needed to minimum Sampling and Testing Guide. None are anticipated at this time.
District Eng. Kevin Griffin	Left phone message
District Eng. Denis Simper	No Comments
Precon. Eng. Rex Harris	Left phone message

Region 2

Region Materials Eng John Butterfield	Left phone message
District Eng Betty Purdie	Left phone message
District Eng Rob Wight	from Michelle Page;

Section 03924:
1) 3.1.B.6 - "If reinforcing steel is epoxy coated, touch up the damaged epoxy coating." How practical is this? Typically, on structures we are repairing the steel is so deteriorated/oxidized the coating would not bond.
95% of the current repairs are on black rebar structures, soon we will have the case of repairing epoxy coated bars. In such a case if the rebar is corroded we would want to clean it and recoat the epoxy. If not the surrounding epoxy would actually accelerate the corrosion at the repair location.

2) 3.2.B - "delaminated concrete" should be "delamination repair" to match the heading of Section 3.4
Good catch.
3) 3.3.B.3 - A maximum spacing of ports is indicated, what about a minimum? Any concerns with someone getting carried away, spacing them too close and actually further splitting the crack and/or delaminating it?
Because of the crack, the pressure shouldn't build up enough pressure to split the crack any more. Closer spacing may be needed to fill the cracks. I don't think a minimum would be needed. The contractor is going to want to fill the cracks with the least amount of holes.
4) 3.3.D - Consider putting temperature ranges in the table; i.e. Less than 66, between 66-90, and greater than 90
We talked about the ranges and we are worried that if it was a range a contractor could say the temperature is only 89, I have 36 hours when 24 would be more accurate. We added "Follow manufacture's recommendations." We feel that interpolation between the temperatures would be better.
5) 3.4 - Add a removal section as well as a sandblasting section similar to 3.5. Consider stating how to remove or adding a submittal of method requirement to the RE for approval (both sections).
3.1 is the removal section for 3.4, we did add the protection for the sandblasting to match the other sections.
6) 3.6 - Consider adding protection items from 3.5.B
Added.

Section 03933:
1) 3.2.B.1 - Again, consider defining removal method or requiring a submittal of method for RE approval ~ Too many times the Contractor can get carried away ripping off the parapets and inducing great stress on the beams/girders/diaphragms.
New submittal was added and reference in 3.2 B
2) 3.8 - Consider adding protection items here as well.
Added

Section 07921:
1) 3.2.A - Again, consider specifying the cleaning of the existing joint or requiring a submittal method for RE approval.
Submittal was added.
2) 3.3.A - Minor grammatical error, add an "as" between "cracks" and "field".
Added.

Section 03934:
1) 2.3.A - Delete "The Engineer designates a trial area to" and capitalize the "D" on "demonstrate".
Done
2) 2.3.B - Consider using the work hydrodemolition instead of hydrodemolisher.
Done

3) 3.2.A.1.c - "Protect any reinforcing steel encountered." Does this need clarification? i.e. are you thinking of anything specific OR should this be re-worded to something along these lines "Remove delaminated concrete above/below reinforcing steel without damaging; all repairs to reinforcing steel damaged during removal are at the Contractor's expense . . ." ~ consider specifying how far below the steel to remove for adequate bond/cover.
We added a section "e" with the depth of removal called out and added about damaged rebar to be replaced at contractor's expense.

4) 3.2.B - Consider adding a notification statement here ~ i.e. Notify the engineer immediately should a blow through occur.
Good idea!

5) 3.4 - "Place concrete within four hours . . ." Is four hours reasonable? i.e. Typically a Contractor cleans the bars the day or evening before, especially where dealing with large and/or numerous areas of patching.
We looked at it. Four hours is what has been in the standard for years. We can change it to 8 hours with the stipulation that they will be required to reblast if the rebar is left overnight.

6) 3.4.D --Consider adding an acceptance section regarding patch failure wherein it is stated that all patch failure repairs are completed at no additional cost to the Department.
I called and talked with Michelle, she wanted a section at the front 1.5 saying what she said above. It was added.

Precon. Eng. Bill Lawerence	No Comments

Region 3

Materials Eng Jim Cox	No Comments
District Eng. Bob Westover	No Comments
District Eng. Scott Andrus	On 03933 Part 3.3 B 1, there is a reference to AASHTO M235 which doesn't seem to be tied into anything. Added "refer to" in front of AASHTO M 235.
Precon. Eng. Brent Schvaneveldt	No Comments

Region 4

Materials Eng Larry Gay	
District Eng. Hugh Kirkham	
District Eng. Robert Dowell	No Comments
District Eng. Jim McConnell	
Precon Eng. Mike Miles	OK for him

Complex

Structures Boyd Wheeler	Many comments throughout the revisions.
Materials Degen Lewis	Many comments throughout the revisions.

Construction Engineers

Contractors (Any additional contacts beyond “C” above.)

Suppliers

Consultants (as required) (Any additional contacts beyond “C” above.)

FHWA (To be accomplished as part of the two-week process before submitting to the Standards and Specifications Section for inclusion on the Standards Committee agenda.) (This is in addition to the requirements of UDOT Policy 08A5-1, procedure 08A5-1.3.)

No Comments at this time.

Others (as appropriate)

E. Other impacted areas, systems, or personnel. (Consider all impacts and possible changes to these areas during the preparation process. Coordinate with all appropriate areas for the respective item. List all impacts and action taken.)

1. Minimum Sampling and Testing Guide (MS&T Guide)

2. Business Systems (Electronic Bid System, Project Development Business System, Electronic Program Management, Computer-Aided Drafting and Design, etc.)

Item numbers will need to be redone to match new spec numbers in PDBS.

3. Implementation Plan (Provide detailed instructions on how the subject item will be implemented to include notification of all interested parties and training requirements.)

Most EMIIs in the regions now know about these.

F. Costs? (Estimates are acceptable.)

1. Additional costs to average bid item price.

Minor changes if at all.

2. Operational (For example, maintenance, materials, equipment, labor, administrative, programming).

3. Life cycle cost.

G. Benefits? (Provide details that can be used to complete a Cost – Benefit Analysis.) (Estimates are acceptable.) (If no costs, what is the benefit of making this change?)

Cleaner better written standards.

H. Safety Impacts?

I. History? Address issues relating to the current usage of the item and past reviews, approvals, and/or disapprovals.

Priority Explanation

Enter the appropriate priority in the box on the first page of the document.

Priority 1 Upon posting, this impacts all projects in construction and design with a Change Order, Addenda, and immediate change to projects being advertised.

Priority 2 Upon posting, this impacts projects being advertised.

Priority 3 Upon posting, the approved standard takes effect **four weeks** later for projects being advertised.

SECTION 03924

STRUCTURAL CONCRETE REPAIR AND SEALING

PART 1 GENERAL

1.1 SECTION INCLUDES

A. Materials and procedures for the repair of columns, pedestals, bent and pier caps, diaphragms, wingwalls, abutment backwalls, beam ends and parapets.

B. Sealing of columns, pedestals, bent and pier caps, diaphragms, wingwalls, abutment backwalls, beam ends and parapets.

1.2 RELATED SECTIONS

A. Section 03055: Portland Cement Concrete

B. Section 03310: Structural Concrete

C. Section 03392: Penetrating Concrete Sealer

1.3 REFERENCES

A. AASHTO M 235: Standard Specification for Epoxy Resin Adhesives

B. AASHTO T 106: Standard Method of Test for Compressive Strength of Hydraulic Cement Mortar (Using 50-mm or 2-in. Cube Specimens)

C. AASHTO T 161: Standard Method of Test for Resistance of Concrete to Rapid Freezing and Thawing

D. ASTM C 882: Standard Test Method for Bond Strength of Epoxy-Resin Systems Used with Concrete by Slant Shear

E. ASTM C 1042: Standard Test Method for Bond Strength of Latex Systems Used with Concrete by Slant Shear

F. ASTM D 4285: Standard Test Method for Indicating Oil or Water in Compressed Air

1.4 DEFINITIONS NOT USED~~.~~

1.5 SUBMITTALS

A. Manufacturer's product data, specifications, and recommended installation instructions for all materials.

B. At the request of the Engineer, provide evidence that epoxy injection equipment operators have at least the two years experience required in the methods and materials of the selected system for application of epoxy injection per this Section, Article 3.3.

C. Supply engineering calculations that are signed and stamped by a P.E. licensed in the State of Utah for girder jacking when it is required for pedestal repair.

1.6 ACCEPTANCE

A. For Delamination Repair:
   1. Rebuild the areas to original shape, ± ~~1/8~~⅛ inch.
   2. Remove and repair if the patching fails to bond. Department does not allow additional compensation for repair of failed patches.

B. For Epoxy Injection:
   1. Penetration of 95 percent of all cracks from $^{1}/_{64}$ inch to ~~1/4~~¼ inch wide is required.

PART 2 PRODUCTS

2.1 MATERIALS

A. Patching Concrete:
   1. Only use products recommended for vertical application by the manufacturer. Obtain Engineer's approval before use.
   2. Use a product that meets AASHTO T 106 and T 161, and meets ASTM C 882 or C 1042

B. Repair Concrete:
   1. Portland Cement Concrete: Class AA (AE). Refer to Section 03055.
   2. Aggregate: ~~3/4~~¾ inch maximum.

C. Substrate Coating: Use a bonding agent or primer recommended by the patching concrete manufacturer.

D. Epoxy Resin Adhesive
   1. Use an appropriate Epoxy Resin Adhesive meeting AASHTO M 235.
      a. Select Type and Class for the application.

E. Epoxy injection:
   1. Use only products for which vertical crack injection is recommended by the manufacturer.
   2. Use appropriate cap seal material recommended by the particular epoxy manufacturer.
   3. Deliver the packages materials in unopened packages with labels clearly indicating the following:
      a. Name of Manufacturer
      b. Manufacturer's product name or product number
      c. Manufacturer's lot number
      d. Mix ratio
      e. SPI Hazardous Material Rating and appropriate warnings for handling

F. Surface Sealing Material: Refer to 03392.

2.2 EQUIPMENT REQUIREMENTS

A. Repair Concrete Mixer:
   1. Use an approved type of small mixer to batch out the repair concrete when specifically approved by the Engineer.

B. Epoxy Injection:
   1. At least two pumps having the following characteristics:
      a. Electric-powered and portable.
      b. Positive displacement.
      c. Positive-ratio control of exact proportions of the two components at the nozzle.
      d. In-line metering and mixing.
   3. Automatic pressure control capable of discharging the mixed adhesive at any preset pressure up to 200 psi ± 0.5 psi and equipped with a manual pressure control override.
   4. Capable of maintaining the volume ratio of the injection material prescribed by the manufacturer within a tolerance of ± 5 percent by volume at any discharge pressure up to 200 psi.
   5. Sensors on both the component A and B reservoirs that automatically stop the machine when only one component is being pumped to the mixing head.

C. Sand blaster:

1. When required, supply a Sand blaster that meets the requirements in ASTM D 4285.

PART 3 EXECUTION

3.1 PREPARATION FOR STRUCTURAL CONCRETE REPAIR

A. Locate the repair areas:

1. Sound the items requiring this work and mark the limits of delaminated areas for repair work in the presence of the Engineer.

B. Preparation for Delamination Repair:

1. Make ½ inch deep saw cuts in the sound concrete surrounding the damaged areas.
2. Remove all damaged, shattered, and delaminated concrete.
3. Remove all loose materials by dry sweeping.
4. Sandblast clean all exposed reinforcing steel and concrete surfaces before placing new concrete. Protect in place any sound epoxy coated or galvanized rebar. Sand blast with an air compressor that meets the requirements in ASTM D 4285.
5. Prevent sandblasting material and debris from falling into streams, pedestrian areas, traffic areas, or onto railroad tracks.
6. Clean by blowing with clean and dry compressed air at 90 psi.
7. ~~If reinforcing steel is epoxy coated, t~~Touch up the damaged epoxy coating prior to placing concrete if reinforcing steel is epoxy coated.

C. For Pedestal repair:

1. ~~When needed to complete the work and as directed by the engineer, p~~Provide jacks~~,~~ and all other equipment required for girder jacking when needed to complete the work and as directed by the engineer. ~~See the Submittal Section~~Refer to this Section, article 1.5 for other requirements.

3.2 CRACK REPAIR

A. Repair cracks from $^{1}/_{64}$ inch to ~~1/4~~¼ inch wide by epoxy injection and sealing.

B. Repair cracks greater than ~~1/4~~¼ inch wide as "delamination repair."

3.3 EPOXY INJECTION

A. Installers:
   1. Injection equipment operators must have at least two years experience in the methods and materials of the selected system for application of epoxy injection.
   2. Injection equipment operators must know the technical aspects of:
      a. Correct material selection and use.
      b. Equipment operation, maintenance, and troubleshooting.

B. Preparation:
   1. Sandblast the concrete surfaces clean.
   2. Seal cracks.
   3. Provide entry ports for the epoxy injection. Space ports a maximum of 6 inches.

C. Epoxy Injection:
   1. Proceed from lower to higher ports.
   1. When epoxy appears at a higher port, plug the port being injected and move to a higher port.

D. Epoxy Sealing:
   1. Grind flush all ports extending above the concrete surfaces.
   2. Apply the sealant at the minimum application rate of 0.09 gal/yd^2.
   3. Cover the entire length of the crack with epoxy sealant for at least 6 inches on both sides of the crack.
   4. Mask the member so a straight vertical line is produced at the cutoff point.
   5. Apply a second coat at the same application rate as soon as the first coat is dry to the touch. Follow manufacture's recommendations. Do not exceed the following times between coats:

Table 1

Time Requirements	
Hours	**Temperature (Degrees F)**
72	66
36	77
24	90

3.4 DELAMINATION REPAIR

A. Form Work
   1. Use forms and braces to place new concrete to the original dimensions.
   2. Vibration is required in the forms when the area between forms and existing concrete surface will allow use of vibrators.

B. Use one type of repair concrete.

C. Placing concrete when thickness to be placed is less than or equal to 3 inches:
   1. Use patching concrete.
   2. Coat the cleaned concrete using the manufacturer's recommended primer.
   3. Place patching concrete in layers not exceeding the manufacturer's recommended application thickness per layer.
   4. Apply the surface sealer recommended by the manufacturer.
   5. Consult the manufacturer's recommendations for finishing.

D. Placing concrete when thickness to be placed is greater than 3 inches:
   1. Apply an epoxy-resin adhesive to the cleaned concrete surface of the repair area before placing the new concrete.
   2. Place the concrete and allow it to cure following the requirements of Section 03310.
   3. After the concrete has properly cured, sandblast the finished concrete surfaces and coat with a penetrating type epoxy sealer. Follow the manufacturer's procedure.

E. Finished surfaces: Provide the look of one color.

3.5 PARAPET SURFACE REPAIR

A. Remove loose and spalled concrete before sandblasting.

B. Sandblast the top and traffic face of the parapet surfaces to remove all dirt, grease, laitance, rust and corrosion before placing concrete or sealer.
   1. Prevent sandblasting material and debris from falling into streams, pedestrian areas, traffic areas, or onto railroad tracks.
   2. Sand blast with an air compressor that meets the requirements in ASTM D 4285.

C. After sandblasting, coat concrete substrate with the manufacturer's recommended primer of the particular patching concrete.

D. Place concrete within the manufacturer's prescribed time period after sandblasting and prime coating has been completed.

E. Patching Concrete:
1. Apply the one component, non-shrinking patching concrete uniformly to build back the original surfaces of the face and top areas of the parapets to within ± ~~1/8~~⅛ inch of the original surface. Allow concrete to cure in accordance with the requirements of the manufacturer's recommendation.
2. If the patch fails to bond to the existing concrete, remove the patch completely and repair again.

F. Finishing Surfaces:
1. Provide a uniform color matching existing parapet.
2. Finish according to Section 03310. Follow manufacturer's recommendations for procedure.

G. Coating Parapet Surfaces:
1. Allow concrete to properly cure.
2. Sandblast all curing compound from the top and traffic face of the parapet.
3. Coat all sandblasted surfaces with the penetrating concrete sealer following the manufacturer's recommended procedure.

H. If wingwalls, overhanging portions of the deck, ~~and/~~or exterior beam surfaces become stained or discolored due to water or concrete leaking from the forms, provide a satisfactory treatment to restore these surfaces to a uniform color.

I. Remove sandblasting materials and debris from the deck after the work is complete.

3.6 SEALING

A. Preparation for Sealing Concrete Surfaces:
1. Sandblast the entire exposed surfaces clean of all dirt, grease, and laitance.
2. Prevent sandblasting material and debris from falling into streams, pedestrian areas, traffic areas, or onto railroad tracks.

B. Concrete Surfaces
1. Coat the entire exposed surface with the penetrating concrete sealer following the manufacturer's application procedures and recommendations. Refer to Section 03392.

END OF SECTION

SECTION 03933

PARAPET/PARAPET END MODIFICATION

PART 1 GENERAL

1.1 SECTION INCLUDES

A. Methods and materials for modifying existing concrete parapet systems to:
   1. Meet current standards.
   2. Prepare the parapet system for attachment of guardrail system or precast concrete barrier.

1.2 RELATED SECTIONS

A. Section 03055: Portland Cement Concrete

B. Section 03211: Reinforcing Steel and Welded Wire

C. Section 03310: Structural Concrete

D. Section 03392: Penetrating Concrete Sealer

1.3 REFERENCES

A. AASHTO M 111: Zinc (Hot-Dip Galvanized) Coatings on Iron and Steel Products

B. AASHTO M 213: Preformed Expansion Joint Fillers for Concrete Paving and Structural Construction (Non-extruding and Resilient Bituminous Types)

C. AASHTO M 235: Epoxy Resin Adhesives

D. AASHTO M 270: ~~Carbon and High-Strength Low-Alloy Structural Steel Shapes, Plates, and Bars and Quenched and Tempered Alloy~~ Structural Steel ~~Plates~~ for Bridges

1.4 DEFINITIONS NOT USED

1.5 SUBMITTALS

A. Manufacturer's product data, specifications, and recommended installation instructions.

B. Submit a method of removal to the Engineer before removing concrete on the parapet.

PART 2 PRODUCTS

2.1 MATERIALS

A. Portland Cement Concrete, Class AA(AE). Refer to Section 03055.

B. Cement: Refer to Section 03055.

C. Reinforcing Steel (Coated): Refer to Section 03211.

D. Connection Bar:
1. AASHTO M 270, Grade 36.
2. Galvanized. AASHTO M 111.

E. Guardrail Preset Anchors: Follow plans.

F. Surface Sealing Material ~~(penetrating type)~~: ~~Subject to Engineer's approval~~Refer to 03392.~~.Refer to Section 03392.~~
~~1. Selected from the Accepted Products Listing available at Research Web site. Refer to http://www.udot.utah.gov/index.php/m=c/tid=719.~~

G. Preformed Joint Filler: As specified. AASHTO M 213.

H. Anchoring Epoxy:
1. Use an appropriate Epoxy Resin Adhesive meeting AASHTO M 235. Select Type and Class for the application.

~~Type I. AASHTO M 235~~
~~2. Class rating consistent with the application temperature.~~
~~3. Refer to the Accepted Products Listing. Listing available at Research Web site. Refer to http://www.udot.utah.gov/index.php/m=c/tid=719.~~
~~4. AASHTO M 235.~~

PART 3 EXECUTION

3.1 PREPARATION

A. Locate existing electric conduit, protect from damage.

B. Carefully remove existing parapet railing and brackets, and deliver to the UDOT maintenance shed designated by the Engineer.

3.2 CONCRETE REMOVAL

A. Prevent debris from falling into streams, pedestrian areas, traffic areas or railroad tracks.

B. For parapet modification to meet standards:
   1. Remove the existing parapet concrete. Prevent damage to wingwalls and deck surface.
   2. Remove loose and spalled concrete. Sandblast the removal areas.
   3. Refer to this Section, ~~A~~article 1.~~4~~5, paragraph B.

C. For preparing parapet end modifications:
   1. Make saw cuts 1 inch deep to define the work area.
   2. Remove concrete using 90 pound class hand-held jackhammers or smaller. Prevent damage to wingwall.
   3. Remove approach slab curb between the parapet end and the approach slab end.
   4. Remove loose and spalled concrete and sandblast the removal areas.

3.3 REINFORCING STEEL

A. Existing Reinforcing Steel:
   1. Refer to the design plans for specific directions.
   2. Thoroughly clean by sandblasting remaining steel of all corrosion and adhering materials.

B. New Reinforcing Steel:
   1. For ~~parapet end~~ modifications: Use epoxy resin adhesive to attach rebar as indicated on the plans. Refer to AASHTO M 235.
   2. Place new coated reinforcing steel after sandblasting operations are complete.

3.4 PLACE CONCRETE

A. Refer to Section 03055 and Section 03310.

B. Clean concrete and steel surfaces. Dampen existing concrete before placing new concrete.

3.5 CONNECTION BARS

A. For modifying to meet standards: Provide two bars for each parapet end.

B. For preparing parapet end modifications: Provide two bars for each parapet end modification except where noted otherwise.

3.6 FORMS

A. Clean forms thoroughly.

~~B. Coat forms with an approved release agent from the Accepted Products Listing available at Research Web site. Refer to http://www.udot.utah.gov/index.php/m=c/tid=719.~~

~~C~~B. Coat forms with a release agent ~~Use a release agent guaranteed in writing by the manufacturer~~that does ~~-~~not ~~to~~ stain concrete or impair bonding properties of any concrete protective surface coating.

3.7 FINISHING

A. Refer to Section 03310.

3.8 COATING CONCRETE SURFACES

A. Allow concrete to properly cure.

B. Sandblast the top and traffic face of the parapet of all curing compound.

C. Coat all sandblasted surfaces with the penetrating concrete sealer. Follow the manufacturer's recommended procedure.

3.9 STAINING

A. When any concrete surface of the structural members become stained, provide a treatment to restore to a uniform color.

END OF SECTION

SECTION 03934

STRUCTURAL POTHOLE PATCHING

PART 1 GENERAL

1.1 SECTION INCLUDES

A. Repair potholes and delaminated areas on bridge decks and approach slabs.

1.2 RELATED SECTIONS

A. Section 01571: Temporary Environmental Controls

B. Section 03055: Portland Cement Concrete

C. Section 03390: Concrete Curing

1.3 REFERENCES

A. ~~A.~~ AASHTO M 235: Epoxy Resin Adhesives

B. ASTM C 882: Standard Test Method for Bond Strength of Epoxy Resin Systems Used with Concrete by Slant Shear

1.4 DEFINITIONS NOT USED

1.5 SUBMITTALS

A. Submit a plan for handling water approved by the Engineer before the water blasting operation begins. ~~See~~ Refer to this Section, ~~A~~article 3.2 ~~this section~~.

1.6 ACCEPTANCE

A. Remove and repair the patching if it fails to bond. Department does not allow additional compensation for continual repair of failed patches.

PART 2 PRODUCTS

2.1 MATERIALS

A. Portland Cement Concrete: Class AA(AE), ~~3/4~~¾ inch maximum aggregate. Refer to Section 03055.

~~B. Cement: Refer to Section 03055.~~
B. Rapid Setting Repair Mortar: Meet the requirements in ASTM C 882

C. Epoxy Resin Adhesive:
1. Type II.
2. Choose class rating consistent with the application temperature.
3. AASHTO M 235.

D. Water: Use water containing no hazardous or toxic materials.

2.2 EQUIPMENT

A. Jackhammer: 30 pound class.

B. Water Blast Equipment:
1. Provide a complete concrete removal system capable of removing concrete to the specified depth.
2. Equipped with a full rotation water jet. Use a water jet having an angle of impingement of 60 degrees or less as measured from the deck surface.

2.3 TESTING AND CALIBRATING HYDRODEMOLITION EQUIPMENT

A. ~~The Engineer designates a trial area to d~~Demonstrate that the equipment, personnel, and method of operations are capable of producing results satisfactory to the Engineer.

B. Do not change parameters once the operation parameters of the hydrodemolish~~er~~ process are defined and satisfactorily demonstrated.

C. Maintain an inventory of common wear parts and replacement accessories for the equipment on the job site.

PART 3 EXECUTION

3.1 PREPARATION

A. Locate all unsound concrete in the deck and approach slabs and mark a rectangular area surrounding each pothole in the presence of the Engineer.
   1. Refer to pothole patching plan.
   2. Remove any asphalt surfacing prior to sounding survey.

3.2 CONCRETE REMOVAL

A. Use either the jackhammer or hydrodemolition method described below.

1.~~B.~~ Jackhammer Method:
   a.~~1.~~ Saw Cuts: Make saw cuts 1 inch deep at the rectangular limits of the repair areas.
   ~~2.~~b. Remove concrete using 30 pound class jackhammer.
   ~~3.~~c. Operate jackhammer at an angle greater than 45 degrees as measured from the deck surface. Protect any reinforcing steel encountered. Replace any reinforcing steel damaged at the contractor's expense.
   ~~4.~~d. Pneumatic hammers heavier than 15 pound class will not be permitted for removals in areas directly below the top reinforcing steel.
   e. If the delamination occurs at the depth of the top matte of steel, remove the concrete to ½ inch below the bottom of top matte of steel.

~~C.~~ 2. Hydrodemolition Method:
   ~~1.~~a. Remove delaminated concrete to the required depth using hydrodemolition methods. Required depth depends on the delamination depth.
   ~~2.~~b. Provide the water necessary for the hydrodemolition operation. Use water containing no hazardous or toxic materials.
   ~~3.~~c. Collect water and debris from the removal operations retention basins or sediment traps. Refer to Section 01571 and EN series Standard Drawings.
      1)~~a.~~ Use pond liners to limit the amount of water leached into the soil from retention basins at the ends of the bridge. Contain waste water, along with concrete debris from the removal operation, in holding ponds for 12 hours before discharging of the water.

2)~~b.~~ The ponds must be equipped with a turn-down elbow to eliminate oil or floatables from being discharged. Dispose of remaining material in the holding ponds in the proper manner.

3)~~c.~~ Clean all water that is returned to the stream bed of sediments and debris. Use temporary slope drains to return water to the stream. Do not allow water to run across traveled lane.

~~4. Light Jackhammer Removal Method:~~

~~a.~~d. Use a jackhammer to remove concrete that cannot be removed with the water blast equipment.

1)~~b.~~ Operate jackhammer at an angle greater than 45 degrees as measured from the deck surface. Protect any reinforcing steel encountered.

2)~~c.~~ Pneumatic hammers heavier than 15 pound class will not be permitted for removals in areas directly below the top reinforcing steel.

~~D.~~B. Blow Through:

1. If removal blows completely through the bridge deck, immediately stop the equipment, notify the engineer and make the necessary adjustments to limit the area of complete concrete removal. Use sandbags to limit the flow of water through the hole, if necessary.
2. Lower a rope through the hole and lift a ¾ ~~3/4~~ inch thick piece of plywood large enough to cover the hole with a 2 inch overlap on all sides.
3. Secure the plywood tightly against the bottom of the slab using ~~1/4~~¼ inch to ~~1/2~~½ inch threaded tie rods fastened to 2 x 4 studs at the top of the deck. Remove the forms as soon as the concrete is set and patch the hole.
4. Use treated plywood to facilitate stripping.

3.3 BONDING CONCRETE

A. Apply an epoxy resin adhesive to the repair area to assist in bonding the fresh concrete to the hardened concrete.

1. Apply the material according to the manufacturer's specifications.
2. Keep the repair area clean until new concrete has been placed.

3.4 PATCHING CONCRETE

A. Sandblast clean all exposed concrete surfaces and reinforcing steel prior to placing new concrete. Place concrete within ~~four~~ eight hours after sandblasting has been completed. Reblasting will be required, if blasted rebar is left overnight.

B. Provide new rebar splices to existing rebars, equivalent size, wherever a section loss greater than 50 percent occurs.

C. Place concrete and strike off level with deck surface. Cure a minimum of four days using the water method. Refer to Section 03390. If using Rapid Setting Repair Mortar, follow the manufacturer's requirements.

D. Patch failure: if the patch fails to bond to the existing concrete, remove the patch completely and repair the pothole again.

3.5 PROTECTION

A. Prevent debris from falling into streams, pedestrian areas, traffic areas, or railroad tracks.

END OF SECTION

SECTION 07921

SEALING EXISTING CONCRETE SLOPE PROTECTION JOINTS

PART 1 GENERAL

1.1 SECTION INCLUDES

A. Seal existing concrete slope protection joints.

1.2 RELATED SECTIONS

A. Section 03055: Portland Cement Concrete

B. Section 03152: Concrete Joint Control

1.3 REFERENCES

A. ASTM C 578: Rigid, Cellular Polystyrene Thermal Insulation

B. ASTM D 412: Vulcanized Rubber and Thermoplastic Rubbers and Thermoplastic Elastomers-Tension

1.4 DEFINITIONS Not Used

1.5 ~~CERTIFICATES~~SUBMITTALS

A. Furnish the certificates of compliance and sealant material test results for each lot of material supplied.

PART 2 PRODUCTS

2.1 MATERIALS

A. Rigid Plastic Foam
   1. Type 9, density of 2 lb~~s~~/ft^3
   2. ASTM C 578

B. Backer Rod: Refer to Section 03152.

C. Portland Cement Concrete
1. Refer to Section 03055.
2. Maximum aggregate size of ~~3/4~~¾ inch.

D. Cement: Refer to Section 03055.

E. Sealant Material with the following characteristics:
1. Applied cold and curable under field conditions.
2. Polyurethane based, gun grade.
3. Elastomer, non-sag seal.
4. Bonds tightly to concrete sides and joints.
5. Physical properties when cured 21 days at 75 degrees F as in Table 1.

Table 1

Physical Properties		
Property	**Value**	**Method**
Modulus of elasticity at 100 percent elongation	132 psi	ASTM D 412
Hardness	40 ± 5	Shore A
Elongation (at break)	450 percent	ASTM D 412
Recovery	Greater than 90 percent	
Tensile strength	190 psi	ASTM D 412
Adhesive in peel	20 lb~~s~~/inch	
Adhesive Loss	0 percent	
Service Range	- 40 degrees F to 150 degrees F	
Initial Cure, Tack Free (depending on temperature and humidity)	6 to 8 hours	
Final Cure	5 to 8 days	
Staining Characteristics	Non-staining	

PART 3 EXECUTION

3.1 JOINT LOCATIONS

A. ~~The Engineer must m~~Mark the existing joints and the joint limits in the presence of the Engineer. This applies to all joints that require sealing according to the Typical Vertical Joint Sealing Detail, and Typical Contraction Joint Sealing Detail in the plans.

3.2 PREPARING JOINT AND CRACKS

A. ~~Clean~~Remove the existing joint material and all other debris from the designated joints. Keep concrete surfaces in the joints clean and dry at the time the backing rod and sealant are placed.

B. Remove curing compounds, oil, grease, dirt, and any other foreign materials from the joint concrete surfaces by sandblasting.

3.3 SEALING HORIZONTAL JOINTS AND CRACKS

A. Seal the horizontal joints and cracks as field marked. ~~by the Engineer.~~

B. Use a backer rod when the joint or crack width is greater than ~~1/2~~½ inch.

C. Start at one side and proceed to the other side on horizontal grooves (cracks or joints).

3.4 SEALING VERTICAL JOINTS AND CRACKS

A. Seal the vertical joints and cracks as field marked. ~~by the Engineer.~~

B. Start from top to bottom on vertical grooves (cracks or joints.)

3.5 SEALING ALONG WINGWALLS AND BACKWALL JOINTS

A. Place the rigid plastic foam material (styrofoam) against the surface of all structural members before placing the joint sealant.

B. Anchor the rigid plastic foam in place with a compatible adhesive.

C. Recess the styrofoam ~~3/8~~⅜ inch in the joints so a groove is formed above the styrofoam filler.

D. Fill the groove above the styrofoam with sealant so the joint is sealed over completely.

3.6 PLACING SEALANT

A. Place with a hand- or power-operated caulking gun.

B. Tool the sealant using a concave pointing tool with soap solution.

C. Do not place sealant unless temperature is at least 50 degrees F and rising.

3.7 LARGE JOINT AND CRACK SEPARATION

A. Re-establish the original joint design by filling vertical or horizontal joints with concrete when joint widths are greater than 2 inches.

B. Fill vertical or horizontal cracks with concrete when crack widths are greater than 2 inches.

END OF SECTION

Standards Committee Submittal Sheet

Name of preparer: Jerry L. Chaney
Title/Position of preparer: Environmental Engineer
Specification/Drawing/Item Title: Standard Specification "Environmental Protection"
Specification/Drawing Number: 01355

Enter appropriate priority level:
(See last page for explanation) **3**

Sheet not required on editorial or minor changes to standards. Check with Standards Section.

NOTES:

1. All Submittal Sheets must be completed and sent to the Standards and Specifications Section by the Standards Committee suspense date as shown on the Web. (http://www.udot.utah.gov/index.php/m=c/tid=303)
2. The Preparer of the Submittal Sheet or the Standards Committee member (or authorized substitute) responsible for the submittal must be present at the Standards Committee meeting and capable of discussing and answering all questions related to the submittal. The item will be postponed to a later meeting if one of these people is not present.
3. Notify the Standards and Specifications Section immediately of any changes that impact the presentation to include absence of sponsor or delay in presentation.

Complete the following: (Use additional pages as needed.)

A. Why? Detail the reason for changing the Standard (Specification or Drawing), what has initiated a new Standard, or what has caused a new or changed item of interest.

Numerous items in the current specification needed additional clarification to ensure compliance with environmental laws

B. How is Measurement and Payment handled? Existing (from the measurement and payment document), modified, or new measurement and payment to be included with all Standard Specifications or Supplemental Specifications.

Not Applicable

C. Stakeholder Notification for AGC and ACEC:

By email provide the AGC and ACEC Standards Committee member a copy of all pertinent information relating to the specification or drawing. Detail all responses below. Indicate if no comments were received.

Note: There is a two-week response time set for this item.

Refer to the Standards Committee Web site, Members page at http://www.udot.utah.gov/index.php/m=c/tid=659 for the respective e-mail addresses.

AGC Comments: (Use as much space as necessary.)
No response to date.

ACEC Comments: (Use as much space as necessary.)
One comment:
"1.11 E. Suggest eliminating the statement in parentheses - "(from a few hours to a few months)" - "variable and dependent upon the nature and condition of the discovered item" is sufficient.
Response – Comment incorporated.

D. Stakeholders? From the list provided, document the stakeholders contacted, detailing: the company, name of contact, how contacted (by phone, email, hard copy, or in person), concerns, and comments of the change. Stakeholders:

Note: There is a two-week response time set for this item. Allow Stakeholders two weeks to process and respond to coordination requests. All areas should try to complete review and comment as soon as possible but within two weeks.

In-house (for example, preconstruction, materials, construction, safety, design, maintenance) (Include all applicable in-house areas even if not listed above.)

Construction Engineers
One comment:
Maybe you want to include the definition for "disclosure of hazardous waste". I'm not sure how many people will look it up and therefore may not comply.
Response – Comment incorporated.

Contractors (Any additional contacts beyond "C" above.) - None

Suppliers – Not applicable

Consultants (as required) (Any additional contacts beyond "C" above.) - None contacted

FHWA (To be accomplished as part of the two-week process before submitting to the Standards and Specifications Section for inclusion on the Standards Committee agenda.) (This is in addition to the requirements of UDOT Policy 08A5-1, procedure 08A5-1.3.)

One comment:
Section 1.9 NOISE AND VIBRATION CONTROL paragraph B 5 defines vibration as ground movements resulting from construction related activities. Paragraph C requires that construction work be suspended when "Project related construction noise or vibration does not meet specifications." The specification defines noise levels, but does not define a level of vibration or a way to determine when vibration becomes a problem. This needs to be defined to be enforceable.

Response – Comment incorporated

Others (as appropriate)
UDOT Region Environmental Staff

Comments:
1) Section 1.4, part D. regarding hazardous waste cleanup.
We shouldn't assume that UDOT is going to cleanup any hazardous waste encountered in construction. This can be very costly in delays, in performing the cleanup work, and in transportation and disposal.
The specification is written to dispose of the hazardous materials as extra work. It is directing and authorizing the contractor to proceed without regard to cost, without an approved plan, or without an approved change order. UDOT may elect to leave the waste in place for the responsible party to cleanup. When trenching through a LUST site for pipe, it may be reasonable to simply back fill the pipe with the excavated material and leave it for the responsible party to remediate.
Response - Comment incorporated, language clarified.

Rather than say the waste will be cleaned up to EPA and DEQ standards, the Contractor should be directed to notify the Engineer to obtain direction on how to proceed.
Response – Comment not incorporated, EPA & DEQ standards must be met

2) Section 1.6 Streams

When motorized equipment is planned for use in or near streams or other water bodies a SPCC plan should be required. Guidelines for the spill prevention control and countermeasure plan can be found on the EPA's website. I've always felt this was a weakness in our specifications. This is typically an agency requirement when there is a chance for contaminating water. The plan should include inspecting equipment for leaks and preventative maintenance of potential leaks. It should include having spill containment materials available. There should be phone numbers immediately available of who to notify in the event of a spill, such as a downstream public water supplier with a diversion for a treatment plant. One hydraulic line break on a piece of equipment in or near a stream can kill fish and otherwise highly impact a surface or subsurface water source.
Response – Comment not incorporated, new Storm Water Pollution Prevention Plan outline should serve the need described in this comment

E. Other impacted areas, systems, or personnel. (Consider all impacts and possible changes to these areas during the preparation process. Coordinate with all appropriate areas for the respective item. List all impacts and action taken.)

1. Minimum Sampling and Testing Guide (MS&T Guide) - Not Applicable

2. Business Systems (Electronic Bid System, Project Development Business System, Electronic Program Management, Computer-Aided Drafting and Design, etc.)
No impacts expected

3. Implementation Plan (Provide detailed instructions on how the subject item will be implemented to include notification of all interested parties and training requirements.)

All potential users and interested parties will be trained on the revised specification via special meetings and conference breakout sessions

F. Costs? (Estimates are acceptable.)

1. Additional costs to average bid item price. - None

2. Operational (For example, maintenance, materials, equipment, labor, administrative, programming). - None

3. Life cycle cost. - Not applicable

G. Benefits? (Provide details that can be used to complete a Cost – Benefit Analysis.) (Estimates are acceptable.) (If no costs, what is the benefit of making this change?)

Benefits include additional clarification and information provided by the revised specification.

H. Safety Impacts? - None

I. History? Address issues relating to the current usage of the item and past reviews, approvals, and/or disapprovals.

Some sections of the current specification contain language that is unclear or unenforceable. The proposed revisions will remedy this situation.

Priority Explanation

Enter the appropriate priority in the box on the first page of the document.

Priority 1 Upon posting, this impacts all projects in construction and design with a Change Order, Addenda, and immediate change to projects being advertised.

Priority 2 Upon posting, this impacts projects being advertised.

Priority 3 Upon posting, the approved standard takes effect **four weeks** later for projects being advertised.

SECTION 01355

ENVIRONMENTAL PROTECTION

PART 1 GENERAL

1.1 GENERAL PROVISIONS

A. Comply with all Federal, State, local laws and regulations, and provisions of this Section.

B. Prevent pollution of streams, lakes, ponds, and reservoirs with sediment, fuels, oils, bitumens, chemicals, or other harmful materials and pollution of the atmosphere from particulate and gaseous matter.

C. Use Best Management Practices to prevent hazardous material releases by segregating wastes, providing secondary containment and having spill kits and absorbents on hand.

1.2 RELATED SECTIONS Not Used

1.3~~2~~ REFERENCES

A. ANSI

B. ~~U.S. Code of Federal Regulations~~Title 40, Code of Federal Regulations (CFR) ~~CFR~~

C. U. S. Environmental Protection Agency Regulations

D. Utah Administrative Code

E. Utah State Department of Environmental Quality Regulations

1.4 DEFINITIONS Not Used

1.5 SUBMITTALS Not Used

1.6~~3~~ HAZARDOUS MATERIAL - DISCOVERED DURING CONSTRUCTION

A. Immediately suspend work in the area and notify the Engineer if abnormal conditions are encountered or exposed during construction that indicates the presence of a hazardous material, toxic or hazardous waste.
   1. Treat the conditions with extreme caution.
   2. Abnormal conditions include, but are not limited to, the following: presence of barrels; buried storage tanks; above ground tanks; obnoxious odors; excessively hot earth; stained and discolored soils; smoke; unidentifiable powders, sludges, pellets; or any other condition that could be a possible indicator of hazardous material, toxic or hazardous waste.

B. Execute the following notifications if a petroleum-based or hazardous waste spill occurs that meets the definition for disclosure as defined in Title 40 CFR Part 261, Subpart D – Lists of Hazardous Wastes. Refer to http://www.udot.utah.gov/go/standardsreferences. ~~(http://ecfr.gpoaccess.gov)~~.
   1. Notify the Engineer immediately after the discovery.
   2. Notify the Utah Department of Environmental Quality (DEQ) in accordance with R315.9 of Utah Administrative Code. 24-hour phone number: (801) 536-4123.
   3. Notify the DEQ in writing within five calendar days of the discovery.

C~~B~~. Resume operation in this area when directed by the Engineer. Continue working in other areas of the project, unless otherwise directed by the Engineer.

D~~C~~. Dispose of the hazardous material, toxic or hazardous waste under the requirements and regulations of the Utah State Department of Environmental Quality and United State Environmental Protection Agency.
   1. Consult with the Engineer on all issues related to the disposal of hazardous substances.
   2~~1~~. Perform necessary work required to dispose of these materials as extra work.
   3~~2~~. Disposition of waste materials requiring special procedures by certified personnel will be arranged by the Department with qualified persons to dispose of the material.

1.7 HAZARDOUS MATERIAL - CONTRACTOR CAUSED

A. Execute the following notifications if a petroleum-based or hazardous waste spill occurs that meets the definition for disclosure as defined in Title 40 CFR Part 261,~~.~~, Subpart D – Lists of Hazardous Wastes. Refer to http://www.udot.utah.gov/go/standardsreferences for the Electronic Code of Federal Regulations Web site. ~~(http://ecfr.gpoaccess.gov).~~ ~~Notify the Engineer and the Department of Environmental Quality of spills of petroleum based products or hazardous waste if the release would meet the definition of a hazardous waste as defined in Title 40 U.S. Code of Federal RegulationsCFR Part 261.~~

1. Notify the Engineer immediately after the discovery of the spill.
2. Notify the Utah Department of Environmental Quality (DEQ) in accordance with R315.9 of Utah Administrative Code. 24-hour phone number: (801) 536-4123.~~Notify the Department of Environmental Quality (DEQ) in writing within five calendar days of the discovery.~~
3. Notify the DEQ in writing within five calendar days of the discovery. ~~Notify the DEQ in accordance with R315.9 of Utah Administrative Code. 24-hour phone number: (801) 536-4123.~~

B. Capture and ~~D~~dispose of spilled material according to the requirements and regulations of the DEQ ~~Utah State Department of Environmental Quality~~.

C. Pay for all required clean-up operations.

1.8 ~~LIVE~~ STREAMS

A. Any work in or adjacent to a perennial or ephemeral stream or river requires a General Permit 40 (stream alteration permit) issued by the Utah Department of Water Rights (Utah Administrative Code: Rule R655-13 Stream Alteration).

1. Adhere to the General and Special Conditions associated with the permit.
2. Conform to stream disturbance limits identified in the plans.~~Ford or work in live streams or any live body of water (live water) only with approval from the Utah Division of Water Quality and Utah Division of Water Rights. Do not operate mechanized equipment in live water unless provided for in the Contract. Minimize stream siltation~~.

B. If a stream alteration permit is not issued for the project and work needs to be done in or adjacent to a stream, obtain approval from the ~~and~~ Utah Division of Water Rights before proceeding. ~~and I~~if construction activity

increases water turbidity in the stream by 10 NTUs or more notify the Utah Division of Water Quality.

C. ~~B.~~ When working in a live stream, ~~U~~use a dike or barrier to separate temporary work areas ~~or pits~~ located in ~~or adjacent to~~ streams from the main stream. Minimize ~~Prevent~~ sediment from entering ~~adjacent~~ streams.

~~A.~~

~~C.~~D. Use filtration, settling basins, or other methods to treat sediment-laden water before allowing it to enter a water body. ~~Treat water used to wash aggregate or water from other operations that produce sediment by filtration, settling basins, or other methods that reduce sediment concentrations to the level of the stream or lake into which it is discharged.~~

1.9 OPEN BURNING

A. Do not conduct open burning~~Prohibited~~ along highway rights-of-way without approval orders from the Executive Secretary of the Utah Division of Air Quality.

1.10 ABRASIVE BLASTING - VISIBLE EMISSION STANDARDS

A. **Visible Emission Standards:**

1. Abrasive blasting outside of Weber, Davis, Salt Lake and Utah Counties: Do not discharge into the atmosphere opacity darker than 40 percent for a period or periods aggregating more than three minutes in any one hour.
2. Abrasive blasting inside Weber, Davis, Salt Lake or Utah Counties where the performance standards in this article, paragraph C are used: Do not discharge into the atmosphere opacity darker than 20 percent for a period or periods aggregating more than three minutes in any one hour.
3. Abrasive blasting inside Weber, Davis, Salt Lake or Utah Counties where the performance standards in this article, paragraph C are not used: Do not discharge into the atmosphere opacity darker than 40 percent for a period or periods aggregating more than three minutes in any one hour.

B. **Visible Emission Evaluation Techniques:**

1. Read emissions from unconfined blasting at the densest point of the emission after a major portion of the spent abrasive has fallen out. Densest point will be between 6 ft and 25 ft from the impact surface of the abrasive blasting nozzle.

2. Judge emissions from unconfined blasting employing multiple nozzles as a single source unless each nozzle meets the emission and performance standards.
3. Read emissions from confined blasting at the densest point after the air contaminant leaves the enclosure.

C. **Performance Standards:** Any one of the following may be used as a performance standard.
1. Confined blasting
2. Wet abrasive blasting
3. Hydroblasting
4. Unconfined blasting using abrasives defined below:
   a. Before blasting, the abrasive will not contain more than one percent by weight material passing a #70 U.S. standard sieve.
   b. After blasting, the abrasive will not contain more than 1.8 percent by weight material 5 micron or smaller.
   c. Abrasives reused for dry unconfined blasting are exempt from the requirements of "after blasting," but must conform to the requirements of "before blasting" above.

D. **Abrasive Certification:** Sources using the performance standard for unconfined blasting must demonstrate they have obtained abrasives from persons who have certified (submitted test results) to the Utah Air Quality Executive Secretary at least annually that such abrasives meet the requirements outlined above for abrasives.

1.11 NOISE ~~AND VIBRATION~~ CONTROL

A. Identify haul routes and percussive noise sources that annoy sensitive receptors and prevent these sources from becoming a problem.

B. Definitions and Standards - Use terminology that meets applicable American National Standards Institute (ANSI) publications and commonly accepted practices of acoustical measurements.
1. Receptor - An occupied residential dwelling, church, hospital, school, outdoor stage, or structure confining other noise sensitive activities.
2. Noise Sensitive Zone - The land enclosed within a 1500-ft radius circle of any receptor.
3. Sound Level - The total sound pressure level from all concurrent construction activities related to the subject project, as measured with a sound level meter using the A-weighting network (ANSI S1.4). The standard notation is dB(A) or dBA.

4. Percussive Noise - Short burst(s) of banging or clattering noise including but not limited to blasting, pile driving, and jack-hammering.

C. Prohibitions - Suspend construction work under the following conditions:
1. Construction activity in a noise sensitive zone causes the sound level within 10 ft of the nearest receptor to exceed: 95 dBA in daytime (7 a.m. - 9 p.m.), or 55 dBA in nighttime (9 p.m. - 7 a.m.)
2. A noise sensitive zone on Sundays and State Holidays.
3. Project related construction noise ~~or vibration~~ does not meet specifications. Suspend the portion of construction work responsible for the problem until noise is reduced to the required noise standards.

D. Compliance:
1. Follow all local noise ordinances, except where a variance in accordance with local regulations has been granted.
2. Local noise ordinance variance does not provide an exemption from complying with the requirements of this article, paragraph C.

E. Percussive Noise:
1. Notify the Engineer at least two weeks in advance of any percussive noise activity that is expected to exceed the provisions of this article, paragraph C.
2. Coordinate notification of the public with the Engineer.

1.12 ENVIRONMENTAL CLEARANCE BY THE CONTRACTOR

A. Obtain and provide the following environmental clearances before beginning project activity when adding or selecting any ground- or resource-disturbing features such as material (gravel, borrow or waste) sites, equipment staging sites, office sites, water lines, holding ponds, etc., not provided in the Contract:
1. Cultural and Paleontological - Initiate consultation concerning proposed additional feature(s) with a Department staff archeologist. (Hiring a private archeological ~~subconsultant~~sub consultant and coordination with the Utah State Historic Preservation Office may be required.)
   a) The Department staff archeologist provides clearance to the Contractor via written notification. ~~See~~Refer to this Section, article 1.13~~10~~.
2. Threatened/~~ and~~ Endangered Species: Obtain written clearance from the U.S. Fish and Wildlife Service.
3. Wildlife Resources: Obtain written clearance from the State Division of Wildlife Resources.

43. Wetlands: Obtain written clearance from the U.S. Army Corps of Engineers.

54. Floodplains - Initiate consultation concerning the proposed additional feature(s) with the Region environmental staffHydraulics Section.

a) Subsequent coordination with the Federal Emergency Management Agency (FEMA) may be required.

b) The Region Hydraulic Engineer provides verification of non-interference by the Contractor with a floodplain or compliance with FEMA guidelines to the Contractor.

65. Prime, Unique, and Important Farmland - Initiate consultation concerning the proposed additional features with the farmland specialist with the Region's Environmental Engineer.

a) Subsequent coordination by the Contractor with the U.S. Natural Resources conservation service may be required.

b) The Region provides written clearance to the Contractor.

76. Utah Pollutant Discharge Elimination System (UPDES) - Obtain UPDES permit for storm water discharge from Utah Division of Water Quality (DWQ).

a) Comply with the requirements of the permit including submittal of Notice of Intent (NOI) form to DWQ and development and approval of the storm water pollution prevention plan by the DWQ when required.

87. Air Quality: Obtain construction approval from the Utah Division of Air Quality if construction project or area of disturbance outside of the project is in an area of air quality non-attainment for any pollutant.

B. Contractor is responsible for all costs of pursuing and obtaining all the above clearances, and is not entitled to time extension for delays encountered in obtaining these clearances.

1.13 DISCOVERY OF HISTORICAL, ARCHAEOLOGICAL, OR PALEONTOLOGICAL OBJECTS, FEATURES, SITES, HUMAN REMAINS, OR MIGRATORY AVIAN SPECIES

A. Immediately suspend construction operations in the vicinity (minimum 100-ftoot buffer around the perimeter) of the discovery if a suspected historic, archaeological, or paleontological item, feature, or site is encountered, or if suspected human remains are encountered.

B. Verbally notify the Engineer of the nature and exact location of the findings.

C. The Engineer contacts the UDOT Region staff archaeologist, who will assess the nature of the discovery and determine the necessary course of action.

D. ~~If bats or migratory birds are discovered on structures, n~~Notify the Engineer who in turn notifies~~,~~ the Region Environmental Manager and the UDOT Wildlife Biologist if bats or migratory birds are discovered on structures.~~.~~

1. Coordinate to determine the necessary course of action.

E. Protect the discovered objects or features and provide written confirmation of the discovery to the Engineer within two calendar days.

F. The Engineer keeps the Contractor informed concerning the status of the restriction.

1. The time necessary for the Department to handle the discovered item, feature, or site is variable, dependent on the nature and condition of the discovered item.
2. The Engineer will provide written confirmation when work may resume in the area.

~~**1.10 DISCOVERY OF HISTORICAL, ARCHEOLOGICAL, OR PALEONTOLOGICAL OBJECTS**~~

~~A. Immediately suspend construction operations in the vicinity of the discovery if a suspected historic, archeological or paleontological item, feature, prehistoric dwelling sites or artifacts of historic or archeological significance are encountered.~~

~~B. Verbally notify the Engineer of the nature and exact location of the findings.~~

~~C. The Engineer contacts the State archeological authorities to determine the disposition of the objects.~~

~~D. Protect the discovered objects and provide written confirmation of the discovery to the Engineer within two calendar days.~~

~~E. The Engineer keeps the Contractor informed concerning the status of the restriction.~~

~~1. The time necessary for the Department to handle the discovered item, feature, or site is variable and dependent on the nature and condition of the discovered item.~~
~~2. Expect a two week or more delay in the vicinity of the discovery.~~

~~3. The Engineer will provide written confirmation when the restriction is terminated.~~

PART 2 PRODUCTS Not used

PART 3 EXECUTION Not used

END OF SECTION

Standards Committee Submittal Sheet

Name of preparer: Robert Nash
Title/Position of preparer: CE III/Design Engineer
Specification/Drawing/Item Title: Painting for Structural Steel, Cleaning and Repainting Structural Steel, and Cleaning and Overcoating Structural Steel
Specification/Drawing Number: Section 09972, 09991, and 09992

Enter appropriate priority level:
(See last page for explanation) **3**

Sheet not required on editorial or minor changes to standards. Check with Standards Section.

NOTES:

1. All Submittal Sheets must be completed and sent to the Standards and Specifications Section by the Standards Committee suspense date as shown on the Web. (http://www.udot.utah.gov/index.php/m=c/tid=303)
2. The Preparer of the Submittal Sheet or the Standards Committee member (or authorized substitute) responsible for the submittal must be present at the Standards Committee meeting and capable of discussing and answering all questions related to the submittal. The item will be postponed to a later meeting if one of these people is not present.
3. Notify the Standards and Specifications Section immediately of any changes that impact the presentation to include absence of sponsor or delay in presentation.

Complete the following: (Use additional pages as needed.)

A. Why? Detail the reason for changing the Standard (Specification or Drawing), what has initiated a new Standard, or what has caused a new or changed item of interest.

Systematic update was done for 2008 Specifications. Added submittal requirements. Removed AISC category III painting endorsement because it was deemed not stringent enough. Added enforcement language.

B. How is Measurement and Payment handled? Existing (from the measurement and payment document), modified, or new measurement and payment to be included with all Standard Specifications or Supplemental Specifications.

Nothing is changed.

C. Stakeholder Notification for AGC and ACEC:

By email provide the AGC and ACEC Standards Committee member a copy of all pertinent information relating to the specification or drawing. Detail all responses below. Indicate if no comments were received.

Note: There is a two-week response time set for this item.

Refer to the Standards Committee Web site, Members page at http://www.udot.utah.gov/index.php/m=c/tid=659 for the respective e-mail addresses.

AGC Comments: (Use as much space as necessary.)

ACEC Comments: (Use as much space as necessary.)

Tyler Yorgason- Civil Science-.Thank you for your e-mail.

Section 09972:

1) Page 2 - Paragraphs F thru I should be E thru H.
2) Page 5, Paragraph C - "1. Refer to Section 05120." Should be shown as a sub paragraph.

Response-I agree will correct.

Section 09972
1.3 Submittals
D. Suggest adding "product" between "Manufacturer's" and "information"

Response-Thank you for the comment. Later in that sentence we refer to "coating materials" which is the product. I believe it is clear and concise as it now reads. Will leave as is.

I don't believe hypens are necessary in D.1. and in 2.1 C.

Response-I agree. Will remove hyphens in both locations.

G. This seems unclear. It appears 1-10 are elements of the QCP. Perhaps the statement G. should include at the end "that addresses the following:" It appears 1-5 would have some frequency, but maybe that would be addressed in the contractor's QCP.

Response- Thank you for the comment however I disagree. I believe this needs to be here. Will leave in.

H. What are the daily reports to include? Or does the Engineer know what to request?

Response-This gives the Engineer the option of requesting information he needs, mostly items in G but could also include painter qualifications, quality and progress of work.

1.5 A. 1. a. This seems difficult to administer prior to contract award, unless it is just an after the fact check * disallowing personnel certified after contract award. What I mean to say is that the Department will not check into qualifications of contractor or subcontractor certifications prior to awarding the contract.

Response-This is not a change from the existing specification. If the Department does not check prior to contract award this would still allow them to get certified personnel.

1.6 A. No commas are necessary in this sentence and should be removed.
Also, captitalization is not necessary for "preparation" or "painting".

Response- I agree. Will correct.

(There is random misuse of capitalization throughout the specification * examples - "Zinc", "Epoxy", and "Urethane" in 2.1 A., "Mist Coat" in 3.2 A.7.)

Response-Will check this.

3.2 A.5. Just say "approved by the Engineer". The Engineer may in fact have a "representative", but is the only person having authority.

Response- Thank you for the comment. The person checking this will most likely be the materials inspector at the fabrication shop. I do not see any harm in the way this is. Will leave as is.

3.5 E. Should this be either OSHA or MSHA rather than the Bureau of Mines and include a reference?

Response- Thank you for the comment. This is as it now stands in the existing specification. I would assume that the Bureau of Mines might have more stringent guidelines due to the requirements of mining protection. Please let me know if you have more information on this subject. Will leave as is for now.

3.7. This article is superfluous. It's too bad it seems necessary to put language in each section regarding consequences for failing to meet the contract specifications. Note the language under Section 00727 (Control of Work) article 1.3:
B. The Engineer has the authority to suspend the work, wholly or in part, by written order without liability to the Department if the Contractor does not:
1. Correct conditions unsafe for the project personnel or the public, or
2. Perform work properly or comply with contract provisions, or
3. Comply with the Engineer's orders

C. The Engineer can suspend work wholly or partially for:a
1. Periods of unsuitable weather, or
2. Conditions unsuitable for the prosecution of the work, or
3. Any other condition or reason determined to be in the Department's interest

Response- Thank you for the comment. Our materials inspectors who deal with this suggested this. I would defer to them. There is material here specific to this area that is only generally covered elsewhere. Will leave as is.

Section 09991 & 09992
Most of the same comments from 09972 apply to these sections also.

Probably should add reference to the CFR based on inclusion in 1.3 H.
Don't need "published in the Federal Register" or the date * just the reference to the title and part.

Response- Thank you for the comments. Will check related comments from 09972. This is not changed from existing specification. Reference to Federal Standards I believe covers this. "Published in the Federal Register" helps to clarify. Will leave as is.

D. Stakeholders? From the list provided, document the stakeholders contacted, detailing: the company, name of contact, how contacted (by phone, email, hard copy, or in person), concerns, and comments of the change. Stakeholders:

Note: There is a two-week response time set for this item. Allow Stakeholders two weeks to process and respond to coordination requests. All areas should try to complete review and comment as soon as possible but within two weeks.

In-house (for example, preconstruction, materials, construction, safety, design, maintenance) (Include all applicable in-house areas even if not listed above.)

In order received.
Robert Dowell District Engineer-I have no comments on any of the specification changes.

Robert Westover-Operations Engineer Region 3-09972

1.5.A.1.a requires certification prior to awarding the contract. Somehow, the construction division needs to be aware of this requirement so that they don't award until they get the certifications.
The above comment applies to the other specs as well.

Response- Thank you for your e-mail. The requirements for certification in the proposed specification prior to contract award are already in the existing specification. The only change made was removing AISC Category III Certification as an alternative for work done in the shop, since it was felt it was not stringent enough. I will check to see how this is being handled at this time.

Larry Gay –Materials Engineer Region 4- Revisions look very good. I have no additional comments.

James Cox Materials Engineer-I have no comments on the three specifications cited. The changes seem appropriate.

Brent Schvaneveldt-Preconstruction Engineer Region 3-No comments

Dennis Simper-District Engineer Region 1-No comments.

Mike Miles-Preconstruction Engineer Region 4-No comment

Bill Lawrence-Preconstruction Engineer Region 2-No comments

Richard Clarke-UDOT Maintenance Engineer-No Comments

Construction Engineers

Contractors (Any additional contacts beyond “C” above.)
Gordon Olsen of Olsen Beal-Ref section 09991 Removal of paint from existing structures including red lead. You have limited this work to only one contractor in the state of Utah . We have in the past been permitted to use our vacuum blast equipment for removal of small areas of red lead for repair work and the areas for new stiffener welding . Recent jobs this permission has been granted for are the I 215 widening at 3800 south project # I 215 9 115 16 the second was the Utah County bridge rehabilitation and widening which involved 10 structures. We also used this procedure on the Hurricane Arch bridge when we did the rivet removal.

All this work was done in accordance with our red lead removal process which has been submitted and is very familiar to Boyd Wheeler. It is part of the AISC advanced erector program of which I would like to fax a copy to you if you would give me your fax number. The logistics of having one painting contractor layout and do small areas of removal is very expensive and almost impossible to coordinate.

We have been using this program in all the surrounding states and is written into the standard specification for Nevada.

Response- Thank you for your e-mail. I feel that this should not be addressed in this particular specification but should be handled on a project by project basis with a special provision modifying the structural steel specification. Permission can still be granted on each project.

Suppliers

Consultants (as required) (Any additional contacts beyond “C” above.)

FHWA (To be accomplished as part of the two-week process before submitting to the Standards and Specifications Section for inclusion on the Standards Committee agenda.) (This is in addition to the requirements of UDOT Policy 08A5-1, procedure 08A5-1.3.)

Anthony Sarhan-FHWA-I have no comment at this time. The specs are still under review in our office and I will let you know of any comments as they arise.

Others (as appropriate)

E. Other impacted areas, systems, or personnel. (Consider all impacts and possible changes to these areas during the preparation process. Coordinate with all appropriate areas for the respective item. List all impacts and action taken.)

1. Minimum Sampling and Testing Guide (MS&T Guide)

No change.

2. Business Systems (Electronic Bid System, Project Development Business System, Electronic Program Management, Computer-Aided Drafting and Design, etc.)

No change.

3. Implementation Plan (Provide detailed instructions on how the subject item will be implemented to include notification of all interested parties and training requirements.)

No training issues are anticipated.

F. Costs? (Estimates are acceptable.)

1. Additional costs to average bid item price.

No additional costs are anticipated.

2. Operational (For example, maintenance, materials, equipment, labor, administrative, programming).

No additional costs are anticipated.

3. Life cycle cost.

No additional costs are anticipated.

G. Benefits? (Provide details that can be used to complete a Cost – Benefit Analysis.) (Estimates are acceptable.) (If no costs, what is the benefit of making this change?)

Clarifications, updates and corrections will improve Specification. No costs are anticipated.

H. Safety Impacts?

No safety impacts.

I. History? Address issues relating to the current usage of the item and past reviews, approvals, and/or disapprovals.

Not applicable

Priority Explanation

Enter the appropriate priority in the box on the first page of the document.

Priority 1 Upon posting, this impacts all projects in construction and design with a Change Order, Addenda, and immediate change to projects being advertised.

Priority 2 Upon posting, this impacts projects being advertised.

Priority 3 Upon posting, the approved standard takes effect **four weeks** later for projects being advertised.

SECTION 09972

PAINTING FOR STRUCTURAL STEEL

PART 1 GENERAL

1.1 SECTION INCLUDES

A. Prepare and paint all surfaces except where indicated otherwise.

1.2 RELATED SECTIONS Not Used

1.3 REFERENCES

A. ASTM D 4285 Standard Test Method for Indicating Oil or Water in Compressed Air

B. ASTM D 4417 Standard Test Methods for Field Measurement of Surface Profile of Blast Cleaned Steel

C. ASTM E 11:Standard Specification for Wire Cloth and Sieves for Testing Purposes

D. Federal Standards

E. The Society for Protective Coatings (SSPC)

F. Northeast Protective Coatings Committee (NEPCOAT)

~~G.Manufacturer Recommendations~~

1.4 DEFINITIONS Not Used

1.5 SUBMITTALS

A. Detailed plan for approval for protection methods that includes Environmental Protection.

B. Source and gradation of the blast abrasive.

C. Type and source of solvent, if required.

D. Manufacturer's information regarding the specified coating materials, including:
1. Required wet and dry film thickness
2. Project safety data
3. Thinning recommendations
4. Temperature requirements
5. Profile recommendations
6. Mixing and application procedures
7. Required equipment

E. Test samples

F. Provide Engineer with a copy of Quality Control Plan. At a minimum it must contain procedures and verification of the following:
1. Compression air check (ASTM D 4285)
2. Dry film thickness (SSPC-PA2)
3. Air temperature
4. Humidity and Dew point
5. Surface temperature
6. Abrasive cleanliness check (SSPC AB 2)
7. Degree of cleanliness achieved
8. Surface profile (ASTM D 4417 method C)
9. Batch number and amount of thinner used
10. Batch number of paint used
11. Mixing procedures
12. Paint repair procedures for scratches, gouges, holidays, mud cracking, runs, and sags

G. Provide daily reports to Engineer upon request
1.Submit no later than 24 hours following the completion of work.

H. Copy of SSPC Certifications

1.6 TEST SAMPLES

A. Department tests samples from each batch or lot of paint prior to use.
1. Submit samples to the Engineer.
2. Paints must match the spectrum samples on file in the UDOT Central Laboratory.

B. Reject paint that does not match the standard.

1.7 PAINTER AND SANDBLASTER QUALIFICATIONS

A. Responsible Parties:

1. Contractors and subcontractors performing surface preparation or coatings applications in the field:
   a. Certification required prior to contract award by The Society for Protective Coatings to the requirements of SSPC QP 1.
   b. Remain certified for the duration of the project.
2. Contractors, subcontractors and/or fabricators performing shop surface preparation or coatings applications:
   a. Certification required prior to contract award by The Society for Protective Coatings to the requirements of SSPC QP 3 enclosed shop.
   b. Remain certified for the duration of the project.
   a. Do not perform work if certification has expired.
   b. Requests for time extension for any delay to the completion of the project due to an inactive certification will not be considered and liquidated damages applies.
   c. Notify the Department of any change in certification status.

1.8 PAYMENT PROCEDURES

A. Surface preparation and painting are included in the contract lump sum price for structural steel.

PART 2 PRODUCTS

2.1 MATERIALS

A. Select a complete 3-part coating system consisting of a zinc primer, epoxy or urethane intermediate coat and aliphatic urethane top coat from the NEPCOAT Qualified Products List. Refer to http://www.udot.utah.gov/go/standardsreferences~~http://www.udot.utah.gov/index.php/m=c/tid=719~~ for a link to this list.

B. Use paint color No. 26293 for the first field coat and No. 26306 for the top coat following Federal Standard 595.

C. Use manufacturer's information regarding the specified coating materials, including required wet and dry film thickness, project safety data, thinning recommendations, temperature requirements, profile recommendations, mixing and application procedures, and required equipment.

D. Properly mix coating system. Meet the manufacturer's recommendations and project specifications. Ensure the bottom of the container is free of any unmixed pigments prior to use.

E. Use necessary equipment for the proper application of the specified coating, observing safety practices found in SSPC Paint Application Guide No. 3, "A Guide to Safety in Paint Application."

F. Use wet and dry film thickness gauges for testing the coating thickness during and after application.

PART 3 EXECUTION

3.1 INSPECTION

A. Engineer examines surfaces prior to surface preparation and prior to application of each succeeding coating. Correct any condition that is determined, by the Engineer, to negatively affect a proper coating application.

B. Provide safe access to permit inspection of the steel before and after painting. Use rubber rollers or other approved protective devices for scaffold fastenings. Do not mar or damage freshly coated surfaces.

3.2 PREPARING SURFACES

A. Painted steel: Clean surfaces with clean petroleum solvents and then blast clean to a near-white condition following SSPC-SP 10. Use clean oil-free air.

1. Grind off all fins, tears, slivers, and burred or sharp edges present on any steel member, or those that result from the blasting operation.
   a. Reblast where needed.
   b. Remove all mill scale.
   c. Do not scar metal.
   d. Grind the edges of all flame cut steel until the hardened edge accepts the blast profile. (ASTM D 4417 method A)
   e. Produce a 0.5 - 3 mils uniform profile not to exceed Manufacturer's Recommendation .
2. Remove all abrasive and paint residue using either a commercial vacuum cleaner or by double blowing.
   a. Equip commercial vacuum cleaner with a brush-type cleaning tool.
   b. Double blowing: vacuum the top surfaces of all structural steel, including top and bottom flanges, longitudinal stiffeners, splice

plates, hangers, etc., after the double-blowing operations are completed.

3. Keep the steel dust-free and prime within 8 hours after cleaning. Reblast to a near-white condition if any rust is visible before priming.
4. Protect freshly coated surfaces from subsequent blast-cleaning operations.
   a. Repair surface if damaged.
   b. Mask all areas requiring field welding before shop painting.
5. Have the surfaces inspected and approved by Engineer or Construction and Materials Division representative of Department before applying shop coat.
6. Apply the shop coat at the fabrication site. Apply coatings at the fabrication site in an enclosure with a controlled environment to match optimum conditions for application and curing as stated in the manufacturer's product data sheet.
7. Apply mist coat to the top flange after shear studs have been attached.

B. Field painting:
1. Repair all damage to shop coat that occurs during shipping, handling, and erection.
2. Power wash steel without the field coat to remove contaminants or other foreign matter from the primed surface.
3. Blast clean bolt heads, fasteners, and any rusted areas to a near-white finish. Thoroughly clean the coating surrounding the blasted area and re-prime the same day, using an organic zinc from the same paint manufacturer and the same dry film thickness specified for the shop coat. (SSPC-SP 10)
4. Remove all concrete drippings, abrasive, and paint residue. If using double blowing, vacuum the top and bottom flanges, splice plates, longitudinal stiffeners, hangers, etc., after completing double-blowing operations.
5. Allow the touch-up coat to dry according to manufacturer's recommendation as listed on the product data sheet.

C Weathering Steel
1. Refer to Section 05120.

3.3 PREPARING PAINT MATERIALS

A. Mix and thin paint materials per manufacturer's product data sheets for both shop and field painting.

B. Mix the paint to a lump-free consistency with a high shear mixer (such as a Jiffy mixer), according to the manufacturer's directions.
1. Do not use paddle mixers or paint shakers.
2. Keep paint in the original containers

3. Mix until all the metallic powder or pigment is suspended, and until all paint solids that may have settled to the bottom of the container are thoroughly dispersed.

C. Strain the paint through a screen having openings no larger than those specified for a No. 50 sieve per the material standard. ASTM E 11.

D. After straining, continuously agitate the mixed material up to and during the time of application.

3.4 APPLYING PAINT

A. Apply each coat at proper consistency and thickness, and in accordance with the manufacturer's recommendations, including field coating. When using spray nozzles, use pressures recommended by the manufacturer of the coating system.

B. Produce a uniform, even coating that bonds to the underlying surface. Follow SSPC-PA1.

C. Apply field coats at the construction site after steel erection work is completed.
1. Do not apply field coats until Engineer approves the surface.
2. Dry film thickness of the first field coat should be greater than 4 mils.
3. Keep the dry-film thickness of the top coat greater than 2 mils.

D. Weather:
1. If weather conditions require paint thinning, follow the manufacturer's recommendations.
2. Temperature of the air and the steel must be above 40 degrees F, but not so hot as to cause the paint to blister.
3. Relative humidity must be less than 85 percent or the combination of temperature, and humidity conditions must inhibit surface condensation.
4. Test humidity by applying a thin film of water to a small area. If the film evaporates with 15 minutes, the surface may be painted.

E. Blast clean any shop coat that shows any indication of "mud-cracking" or adds more than 7 mils to a soundly bonded coating or bare steel. (SSPC-SP 10)

F. Thoroughly clean areas having deficient primer thickness to remove all dirt.

G. Apply an intermediate and top coat to any surface at the fabrication site that will be inaccessible for painting after field erection.

H. Do not load material for shipment until shop paint is dry to the touch.

I Protect all paint systems. Place softeners between plates of cross frames and diaphragms.

3.5 PROTECTION

A. Suspend work if protection is unsatisfactory.

B. Protect pedestrian and vehicular traffic.

C. Protect from splatter, splashes and overspray all portions of the structures that are not to be painted including superstructure, substructure, slope, and highway appurtenances. Protect where other damage during painting and blast cleaning operations could occur.

D. Use barriers during any blast-cleaning operations to protect pedestrians and vehicles, and to prevent spreading or falling of abrasive materials and debris on the traveled portions of the pavement. Remove any abrasive materials and debris on pavement, shoulders, or slope paving before reopening work areas to traffic.

E. Provide employees performing the blast-cleaning operations air-supplied blasting hoods approved by the US Bureau of Mines.

F. Minimum requirements for the air supply system:
   1. Airline filter, pressure-reducing valve with gauge, and pressure release valve.
   2. Do not allow the air supply to be contaminated with harmful materials or elements. (ASTM D 4285)

3.6 QUALITY ASSURANCE

A. Minimum Coating Thickness: Apply two or more coats if the required film thickness cannot be obtained by one coat without producing runs, bubbles, or sags.

B. SSPC PA2

~~3.7~~3.7 SUSPENSION OF WORK

A. Engineer may suspend work for questionable performance of the painter, blasting operator, or the equipment.

B. Suspension of work results from inadequate surface preparation, improper profile, runs, sags, overspray, thin film thickness, excessive film build-up, uneven coating, nonuniform color, improper curing, or any other defect in the coating system.

END OF SECTION

SECTION 09991

CLEANING AND REPAINTING STRUCTURAL STEEL

PART 1 GENERAL

1.1 SECTION INCLUDES

A. Clean and repaint existing structural steel surfaces including all bearing units for existing paint systems that have red lead primer.

B. Remove existing paint from existing structural steel surfaces.

C. Prepare existing steel surface for repainting, and paint the cleaned structural steel surfaces.

1.2 RELATED SECTIONS Not Used

1.3 REFERENCES

A. ASTM D 4285 Standard Test Method for Indicating Oil or Water in Compressed Air

B. ASTM D 4417 Standard Test Methods for Field Measurement of Surface Profile of Blast Cleaned Steel

C. ASTM E 11: Wire Cloth and Sieves For Testing Purposes

D. Federal Standards

E. Northeast Protective Coatings Committee (NEPCOAT)~~The Society for Protective Coatings (SSPC)~~

F. Technology Guide Number 6 –Guide for Containing Surface Preparation Debris Generated During Paint Removal Operations ~~Northeast Protective Coatings Committee (NEPCOAT)~~

G. The Society for Protective Coatings (SSPC)~~Technology Guide Number 6 – Guide for Containing Surface Preparation Debris Generated During Paint Removal Operations~~

1.4 DEFINITIONS Not Used

1.5 SUBMITTALS

A. Detailed plan for approval for protection methods that includes Environmental Protection.

B. Source and gradation of the blast abrasive.

C. Type and source of solvent, if required.

D. Manufacturer's information regarding the specified coating materials, including:
   1. Required wet and dry film thickness
   2. Project safety data
   3. Thinning recommendations
   4. Temperature requirements
   5. Profile recommendations
   6. Mixing and application procedures
   7. Required equipment

E. Test samples

F. Provide Engineer with a copy of Quality Control Plan. At a minimum it must contain procedures and verification of the following:
   a. Compression air check (ASTM D 4285)
   b. Dry film thickness (SSPC-PA2)
   c. Air temperature
   d. Humidity and Dew point
   e. Surface temperature
   f. Abrasive cleanliness check (SSPC AB 2)
   g. Degree of cleanliness achieved
   h. Surface profile (ASTM D 4417 method C)
   i. Batch number and amount of thinner used
   j. Batch number of paint used

G. Provide daily reports to Engineer upon request
   1.Submit no later than 24 hours following the completion of work.

H. Submit a written site specific compliance program documenting the equipment, training, containment, and monitoring system to comply with OSHA's standard on lead exposure in construction, as published in Federal Register, Section 29 CFR 1926.62, May 4, 1993.
   1. Worker Health and Safety Program

2. Environmental Protection and Monitoring Program
3. Hazardous Waste Handling and Reporting of Release Program
4. Provide Engineer with Quality Control Plan and Procedures.

I. Copy of SSPC Certifications

~~1.4~~1.6 TEST SAMPLES

A. Department tests samples from each batch or lot of paint prior to use.
   1. Submit samples to the Engineer.
   2. Paints must match the spectrum samples on file in the UDOT Central Laboratory.

B. Reject paint that does not match the standard

1.7 PAINTER AND BLASTER QUALIFICATIONS

A. Responsible Parties:
   1. Contractors and subcontractors performing surface preparation or coatings applications in the field:
      a. Obtain SSPC QP 2 Category A Certification prior to contract award from The Society for Protective Coatings.
      b. Remain certified for the duration of the project.
      c. Do not perform work if certification has expired.
      d. Requests for time extension for any delay to the completion of the project due to an inactive certification will not be considered and liquidated damages applies.
      e. Notify the Engineer of any changes in certification status.

1.8 REQUIREMENTS FOR COATING APPLICATION

A. Have the painter, the blasting operator, or both consult with the manufacturer's technical representative for answers to technical questions relating to the application of the specified coating materials.

B. Obtain surface preparation approval from the Engineer before applying paint.

C. Use equipment capable of taking dry film thickness readings on all portions including nuts and bolts.

1.9 PROJECT CONDITIONS/WEATHER LIMITATIONS

A. If weather conditions require paint thinning, follow the manufacturer's recommendations.

B. Apply paint only when the following weather conditions exist:
   1. The temperature of the air and the steel: above 40 degrees F, but not so hot as to cause the paint to blister.
   2. The relative humidity:
      a. Less than 85 percent, or such that the combination of temperature and humidity conditions inhibits surface condensation.
      b. To test humidity, apply a thin film of water to a small area. If the film evaporates within 15 minutes, the surface may be painted.
      c. Steel temperature a minimum of 5 degrees F above Dew point.

PART 2 PRODUCTS

2.1 MATERIALS

A. Blasting abrasive: type and size as specified.

B. Solvent: type and source as required.

C. Coating materials:
   1. Mix properly following manufacturer's recommendations and project specifications.
   2. Use necessary equipment for the proper application of the specified coating, observing safety practices found in SSPC Paint Application Guide No. 3, "A Guide to Safety in Paint Application.".

2.2 COATING SYSTEM

A. Select a complete 3-part coating system consisting of a zinc primer, epoxy or urethane intermediate coat, and aliphatic urethane top coat from the NEPCOAT Qualified Products List. Refer to http://www.udot.utah.gov/go/standardsreferences~~http://www.udot.utah.gov/index.php/m=c/tid=719~~ for a link to this list.

B. Use manufacturer's information regarding the specified coating materials, including required wet- and dry-film thickness, project safety data, thinning recommendations, temperature requirements, profile recommendations, mixing and application procedures, and required equipment.

C. Use coating materials properly mixed meeting the manufacturer's recommendations and project specifications. Ensure the bottom of the container is free of any unmixed pigments prior to use.

D. Paint Color: Federal Standard No. 595.
   1. Field coat: Color No. 26293.
   2. Top coat: Color No. 26306.

E. Use necessary equipment for the proper application of the specified coating.

2.3 MIXING

A. Mix the paint to a lump-free consistency with a high shear mixer (such as a Jiffy mixer), according to the producer's directions.
   1. Do not use paddle mixers or paint shakers.
   2. Keep paint in the original containers and mix until all the metallic powder or pigment is suspended.
   3. Continue mixing until all solids that may have settled to the bottom of the container are thoroughly dispersed.

B. Strain the paint through a screen having openings no larger than those specified for a No. 50 sieve. ASTM E 11.

C. After straining, continuously agitate the strained, mixed material up to and during the time of application.

PART 3 EXECUTION

3.1 PREPARATION

A. Clean surfaces, including bearing units, of all oil, grease, and dirt with clean petroleum solvents or steam cleaning prior to blasting operation. SSPC-SP10.

B. Blast surfaces clean to near white with 0.5 to 2 mil profile.

C. Discoloration, light shadows, or slight streaks caused by stains of rust is not allowed on more than 5 percent of surface area.

D. Define acceptable surface preparation using SSPC-Vis 1.

E. Use SSPC-SP-11 to clean areas such as backside of base plates, corners, etc., that cannot otherwise be cleaned.

F. Meet soluble salts requirements of SSPC and the coatings manufacturer.

G. Prime the surface within 8 hours from blasting.

H. Do not prime the surface if rust has started to form. Clean the surface again before applying the prime coat.

I. Protection:
   1. Fully contain all material resulting from paint overspray.
   2. Enclosure system must withstand extreme high winds.
   3 Protect all portions of the structure that will not be painted.

J. Recover a minimum of 95 percent of debris from cleaning operation.
   1. Sample debris from cleaning operation. Submit samples to UDOT Materials and an independent accredited Materials Testing Lab for composition and disposal evaluation.
   2. Place reclaimed waste paint in EPA-USDOT approved containment. Store at the project site.
   3. Submit paint composition and disposal evaluation results from the independent materials testing lab. Disposition will be given to the contractor within 30 days. Dispose of waste paint as directed by the Engineer. Submit disposal certificates for all waste paint.

3.2 APPLICATION

A. Field Inspection:
   1. Do not apply paint until the Engineer approves the prepared surface.
   2. Use rubber rollers or other approved protective devices on scaffold fastenings.
   3. Do not use metal rollers, clamps, and other types of fastenings that mar or damage freshly coated surfaces.

B. Apply paint with spray nozzles at pressures recommended by the manufacturer of the coating system.

C. Prime Coat:
   1. Maintain the dry film thickness of the prime coat between 2.5 and 6.0 mils.(SSPC PA2)
   2. Apply two or more coats without producing runs, bubbles, or sags if the required film thickness cannot be obtained by one coat.
   3. Blast clean any coat that produces “mud-cracking” or adds more than 7.0 mils to a soundly bonded coating or bare steel. (SSPC-SP 10) Re-coat the surface.

4. Thoroughly clean areas having deficient primer thickness with power washing equipment to remove all dirt. Wire-brush, vacuum, and re-coat the area.

D. Intermediate Coat: Apply paint to produce a uniform, even coating which bonds to the underlying surface. SSPC-PA 1.
   1. Use the coating type and minimum dry film thickness specified.
   2. Produce a dry-film thickness of the intermediate coat greater than 4 mils. (SSPC PA2)

E. Finish coat: Keep the dry film thickness greater than 2 mils. (SSPC-PA2)

F. Use wet and dry film thickness gauges for testing the coating thickness during and after application.

G. Painting safety: Follow SSPC Paint Application Guide No. 3, "A Guide to Safety in Paint Application."

3.3 SUSPENSION OF WORK

A. Engineer may suspend work for questionable performance of the painter, blasting operator, or the equipment.

B. Suspension of work results from inadequate surface preparation, improper profile, runs, sags, overspray, thin film thickness, excessive film build-up, uneven coating, non-uniform color, improper curing, or any other defect in the coating system.

END OF SECTION

SECTION 09992

CLEANING AND OVERCOATING STRUCTURAL STEEL

PART 1 GENERAL

1.1 SECTION INCLUDES

A. Clean and overcoat existing structural steel surfaces including all bearing units for existing paint systems that have red lead primer.

1.2 RELATED SECTIONS Not Used

1.3 REFERENCES

A. ASTM D 3359: Standard Test Methods for Measuring Adhesion by Tape Test

B. ASTM D 4285 Standard Test Method for Indicating Oil or Water in Compressed Air

C. ASTM D 4417 Standard Test Methods for Field Measurement of Surface Profile of Blast Cleaned Steel

D. ASTM D 4541: Standard Test Method for Pull-Off Strength of Coatings Using Portable Adhesion Testers

E. ASTM E 11: Wire Cloth and Sieves for Testing Purposes

F. Code of Federal Regulations (CFR)

~~F.~~ G. Federal Standards

~~G.~~ H. Northeast Protective Coatings Committee (NEPCOAT)~~The Society for Protective Coatings (SSPC)~~

~~H.~~ I. The Society for Protective Coatings (SSPC)~~Northeast Protective Coatings Committee (NEPCOAT)~~

1.4 DEFINITIONS

A. Overcoating: spot prime an intermediate coat and a top coat of paint over the entire surface on each girder.

1.5 SUBMITTALS

A. Detailed plan for approval for protection methods that includes Environmental Protection.

B. Source and gradation of the blast abrasive.

C. Type and source of solvent, if required.

D. Manufacturer's information regarding the specified coating materials, including:
   1. Required wet and dry film thickness
   2. Project safety data
   3. Thinning recommendations
   4. Temperature requirements
   5. Profile recommendations
   6. Mixing and application procedures
   7. Required equipment
   8. Method of application

E. Test samples

F. Provide Engineer with a copy of Quality Control Plan. At a minimum it must contain procedures and verification of the following:
   1. Compression air check (ASTM D 4285)
   2. Dry film thickness (SSPC-PA2)
   3. Air temperature
   4. Humidity and Dew point
   5. Surface temperature
   6. Abrasive cleanliness check (SSPC AB 2)
   7. Degree of cleanliness achieved
   8. Surface profile (ASTM D 4417 method C)
   9. Batch number and amount of thinner used
   10. Batch number of paint used
   11. Mixing procedures
   12. Paint repair procedures for scratches, gouges, holidays, mud cracking, runs, and sags

G. Provide daily reports to Engineer upon request
   1. Submit no later than 24 hours following the completion of work.

H. Submit a site specific written compliance program documenting the equipment, training, containment and monitoring system to comply with OSHA's standard on lead exposure in construction, as published in Federal Register, Section 29 CFR 1926.62, May 4, 1993.
   1. Worker Health and Safety Program
   2. Environmental Protection and Monitoring Program
   3. Hazardous Waste Handling and Reporting of Release Program
   4. Provide Engineer with Quality Control Plan and Procedures.

I. Copy of SSPC Certifications

1.5 TEST SAMPLES

A. Department tests samples from each batch or lot of paint prior to use.
   1. Submit samples to the Engineer.
   2. Paints must match the spectrum samples on file in the UDOT Central Laboratory.

B. Reject paint that does not match the standard.

1.6 PAINTER AND BLASTER QUALIFICATIONS

A. Responsible Parties:
   1. Contractors and subcontractors performing surface preparation or coatings applications in the field:
      a. Obtain SSPC QP 2 Category A Certification prior to contract award from The Society for Protective Coatings.
      b. Remain certified for the duration of the project.
      c. Do not perform work if certification has expired.
      d. Requests for time extension for any delay to the completion of the project due to an inactive certification will not be considered and liquidated damages applies.
      e. Notify the Engineer of any changes in certification status.

1.7 REQUIREMENTS FOR COATING APPLICATIONS

A. Have the painter, the blasting operator, or both consult with the manufacturer's technical representative for answers to technical questions relating to the application of the specified coating materials.

B. Obtain surface preparation approval from the Engineer before applying paint.

C. Use equipment capable of taking dry film thickness readings on all portions including nuts and bolts.

1.8 PROJECT CONDITIONS/WEATHER LIMITATIONS

A. If weather conditions require paint thinning, follow the manufacturer's recommendations.

B. Apply paint only when the following weather conditions exist:
   1. The temperature of the air and the steel: above 40 degrees F, but not so hot as to cause the paint to blister.
   2. The relative humidity:
      a. Less than 85 percent, or such that the combination of temperature and humidity conditions inhibits surface condensation.
      b. To test humidity, apply a thin film of water to a small area. If the film evaporates within 15 minutes, the surface may be painted.
      c. Steel temperature a minimum of 5 degrees F above the dew point.

PART 2 PRODUCTS

2.1 MATERIALS

A. Solvent: As recommended by the manufacturer.

2.2 COATING SYSTEM

A. Select a complete 3 part coating system consisting of a zinc primer, epoxy or urethane intermediate coat, and aliphatic urethane top coat from the NEPCOAT Qualified Products List. Refer to http://www.udot.utah.gov/go/standardsreferences~~http://www.udot.utah.gov/index.php/m=c/tid=719~~ for a link to this list.

B. Paint Color: Federal Standard No. 595
   1. Field Coat: Use color No. 26293
   2. Top Coat: Use color No. 26306

C. Use manufacturer's information regarding the specified coating materials, including required wet and dry film thickness, project safety data, thinning recommendations, temperature requirements, profile recommendations, mixing and application procedures, and required equipment.

D. Properly mix coating system. Meet the manufacturer's recommendations and project specifications. Ensure the bottom of the container is free of any unmixed pigments prior to use.

E. Use necessary equipment for the proper application of the specified coating, observing safety practices found in SSPC Paint Application Guide No. 3, "A Guide to Safety in Paint Application."

F. Use wet and dry film thickness gauges for testing the coating thickness during and after application.

2.3 MIXING

A. Mix the paint to a lump-free consistency according to the producer's directions.
   1. Do not use paddle mixers or paint shakers.
   2. Keep paint in the original containers and mix until all the pigment is suspended.
   3. Continue mixing until all solids that may have settled to the bottom of the container are thoroughly dispersed.

B. Strain the paint through a screen having openings no larger than those specified for a No. 50 sieve. ASTM E 11.

C. After straining, continuously agitate the strained, mixed material up to and during the time of application.

PART 3 EXECUTION

3.1 PREPARATION

A. Clean surfaces of all oil, grease, debris, and dirt with clean petroleum solvents. Follow with high-pressure wash. (SSPC SP1)

B. Remove all corrosion, and all paint that shows peeling, brittleness, checking, scaling, or general disintegration, including bearing units.
   1. Use vacuum shrouded power tool cleaning.
   2. Remove paint from the area and beyond the edges of the area so that remaining paint system shows no rusting or blistering underneath, and adheres tightly to the surface. Remaining paint system should have sufficient adhesion that cannot be lifted as a layer by inserting a blade or

putty knife under it. In addition meet requirements of ASTM D 3359 and D 4541.

3. Feather the edges of the remaining paint system around the cleaned areas so the repainted surface appears smooth.
4. Do not allow materials used or debris generated to fall onto surface below.

C. Protection:
1. Fully contain all material resulting from surface preparation and paint overspray.
2. Enclosure system must withstand extreme high winds.
3. Protect all portions of the structure that will not be painted.

D. Recover a minimum of 95 percent of debris from cleaning operation.
1. Sample debris from cleaning operation. Submit samples to UDOT Materials and an independent accredited Materials Testing Lab for composition and disposal evaluation.
2. Place reclaimed waste paint in EPA-USDOT approved containment. Store at the project site.
3. Submit paint composition and disposal evaluation results from the independent materials testing lab. Disposition will be given to the contractor within 30 days. Dispose of waste paint as directed by the Engineer. Submit disposal certificates for all waste paint.

E. Meet soluble salts requirements of SSPC and the coating manufacturer.

3.2 APPLICATION

A. Do not apply paint until the Engineer approves the prepared surface.
1. Use rubber rollers or other approved protective devices on scaffold fastenings.
2. Do not use metal rollers, clamps, and other types of fastenings that mar or damage freshly coated surfaces.

B. Apply paint with spray nozzles at pressures recommended by the producer of the coating system.

C. Apply a minimum dry film thickness of 2 mils spot prime, 2 mils intermediate coat, and a minimum of 1.5 mils for the top coat. Use a magnetic film thickness gauge for verification.

D. Apply two or more coats if the required film thickness couldn't be obtained by one coat without producing runs, bubbles, or sags.

E. Paint as described in the standard specifications to produce a uniform, even coating which bonds to the underlying surface. SSPC-PA 1.

3.3 SUSPENSION OF WORK

A. Engineer may suspend work for questionable performance of the painter, blasting operator, or the equipment.

B. Suspension of work results from inadequate surface preparation, improper profile, runs, sags, overspray, thin film thickness, excessive film build-up, uneven coating, non-uniform color, improper curing, or any other defect in the coating system.

END OF SECTION

Standards Committee Submittal Sheet

Name of preparer: Robert Nash
Title/Position of preparer: CE III/Design Engineer
Specification/Drawing/Item Title: Bearings, Expansion Joint Modification and Expansion Joint
Specification/Drawing Number: Sections 05822, 05831 and 05832

Enter appropriate priority level:
(See last page for explanation) **3**

Sheet not required on editorial or minor changes to standards. Check with Standards Section.

NOTES:

1. All Submittal Sheets must be completed and sent to the Standards and Specifications Section by the Standards Committee suspense date as shown on the Web. (http://www.udot.utah.gov/index.php/m=c/tid=303)
2. The Preparer of the Submittal Sheet or the Standards Committee member (or authorized substitute) responsible for the submittal must be present at the Standards Committee meeting and capable of discussing and answering all questions related to the submittal. The item will be postponed to a later meeting if one of these people is not present.
3. Notify the Standards and Specifications Section immediately of any changes that impact the presentation to include absence of sponsor or delay in presentation.

Complete the following: (Use additional pages as needed.)

A. Why? Detail the reason for changing the Standard (Specification or Drawing), what has initiated a new Standard, or what has caused a new or changed item of interest.

Systematic update for 2008 Specifications. Specification also updated to reference latest publications. Revised to include pre-stressed concrete and structural concrete.

B. How is Measurement and Payment handled? Existing (from the measurement and payment document), modified, or new measurement and payment to be included with all Standard Specifications or Supplemental Specifications.

Nothing is changed.

C. Stakeholder Notification for AGC and ACEC:

By email provide the AGC and ACEC Standards Committee member a copy of all pertinent information relating to the specification or drawing. Detail all responses below. Indicate if no comments were received.

Note: There is a two-week response time set for this item.

Refer to the Standards Committee Web site, Members page at http://www.udot.utah.gov/index.php/m=c/tid=659 for the respective e-mail addresses.

AGC Comments: (Use as much space as necessary.)

ACEC Comments: (Use as much space as necessary.)

Tyler Yorgason- Civil Science-Section 05822
3.1 A. "Included in" appears to be in bold for some reason. Suggest saying "Refer to*" and maybe add the appropriate section numbers here and in the related sections.

Article 3.1 should not be there, this is in error. Under part 3 Execution it should read "Not used". I will correct this.

Section 05831
3.4 A. Extra period at end of line

Response-I agree. Will correct this.

3.8 Suggest just "Watertight Test"

Response-Thank you for the comment. Will leave as is since this terminology has been in use for quite some time.

Section 05832
No comments other than a general comment that applies to most, if not all, of these sections. In the references, ASTM Cs and Ds are specifications, Ds are test methods. Suggest dropping wording "Standard Specification for" or Standard Test Method(s) for * or add this wording to all of the standard specifications that reference ASTM.

Response-Thank you for the comment. The way they read now is the actual title of the particular specification. I believe this is also being done with other specifications that are being updated. Will leave as is.

Additional comments include:

Section 05822:
1) Page 1 and 2 - References should be to "AASHTO LRFD Bridge Construction Specifications" not "AASHTO Standard Specifications" as shown in the red lines.

Response-I apologize for the confusion with the file comparison. The proposed specification (file without redlines) does reference LRFD Bridge Construction Specifications.

Section 05832 (red line):
1) Page 1, Paragraph 1.3.D - ASTM D 240 is a stainless steel spec. Perhaps ASTM D 2240 is intended.

Response-I apologize for the confusion with the file comparison. The proposed specification (file without redlines) does not contain ASTM D 240, it was in the existing specification in error and has been corrected.

2) Page 4, Table 1 - ASTM for hardness should be "D 2240" not "D 240".

Response-I apologize for the confusion with the file comparison. The proposed specification (file without redlines) has been corrected. This was an error in the existing specification.

3) Page 4, Table 1 - Show ASTM numbers for "Oven Aging", "Hardness, Type A Durometer (Points Change)", and "Oil Swell"

Response-I apologize for the confusion with the file comparison. The proposed specification (file without redlines) shows the ASTM sections.

D. Stakeholders? From the list provided, document the stakeholders contacted, detailing: the company, name of contact, how contacted (by phone, email, hard copy, or in person), concerns, and comments of the change. Stakeholders:

Note: There is a two-week response time set for this item. Allow Stakeholders two weeks to process and respond to coordination requests. All areas should try to complete review and comment as soon as possible but within two weeks.

In-house (for example, preconstruction, materials, construction, safety, design, maintenance) (Include all applicable in-house areas even if not listed above.)

In order received.

Robert Westover-District Engineer Region 3-no comment

Larry Gay –Materials Engineer Region 4- Revisions look very good. I have no additional comments.

Robert Dowell District Engineer-I have no comments on the attached specifications.

James Cox Materials Engineer Region 3-I have no comments on the three specifications cited. The changes seem appropriate.

Brent Schvaneveldt-Preconstruction Engineer Region 3-no comments

Dennis Simper-District Engineer Region 1-I have no comments on 05822, 05831 and 05832.

Scott Andrus-District Engineer Region 3 –(Section 05822) On the above I wondered if that isn't better covered in the MMP? On the two expansion joint replacement and new placement specs I have no comments.

Response- Thank you for your e-mail. You are correct this could be covered in the M&P for each project. It was felt that due to past issues with this item it should also be spelled out in the specification.

Mike Miles-Preconstruction Engineer Region 4-No comment

Bill Lawrence-Preconstruction Engineer Region 2-No comment

Richard Clarke-UDOT Maintenance Engineer-No Comments

Michelle Page- for Robert Wight District Engineer Region 2-Thank you for your e-mail.
*Section 05822 - "Bearings" or "Bearing" ~ Choose one and stay consistent throughout the specification. I recommend "bearings" as we seldom talk about a bearing.

The comparison of the files should have been done the opposite way. I apologize for the problems this caused. The way it is done the red-lined file shows the old specification compared to the new proposed specification, what is deleted appears in red type, what is added is in red type crossed out. The new proposed specification is the other file that has no red highlighting. I believe it is bearings throughout the new proposed specification.

*Section 05822 - No mention of a certified welder in Section 2.6 ~ Should this be included here?

Response-This is covered by Section 05120 Structural Steel which specifies welding requirements and qualifications, since this is structural steel.

*Section 05822 - Section 2-6, E, 2 mentions rejecting only a portion of the bearing where the sliding surfaces are damaged ~ If you switch to a partial acceptance, how do you replaced the damaged portion? The specification should include this explanation/direction. In addition, if you change Section 2-6, E, 2 the language following in 3 needs to be changed/deleted as well.

Response-I believe this comment is due to my bad file comparison. This reads "Reject unit when the sliding surfaces are damaged" in the new proposed specification. The entire bearing unit will be rejected if damaged. This is a change from how it is in the existing specification.

*Section 05831 - Section 2.1, C change "Galvanized" to "Galvanize"

Response-I agree change will be made.

*Section 05831 - Section 3.8 ~ "Watertight Integrity Test" Who performs? Per what standard? This item is not clear and/or defined. I assume the Contractor performs this test in the presence of the Department. Also, Section 05831 requires modified joints to be watertight for 15 minutes and Section 05832 requires new joints to be watertight for 2 hours ~ Is this correct?

I believe this comment is due to my bad file comparison. In the proposed specification Section 05831 refers to Section 05832 which calls for one hour, which is what they both should be. I will add "in the presence of the Engineer" to Section 05832 article 3.2 paragraph A.

*Section 05832 - Section 2.4, A: "except" (?) Except what? Please clarify.

I believe this comment is due to my bad file comparison. In proposed specification it reads "except AISC, Simple Steel Bridge Structures (SBR) Certification is required."

*Section 05832 - Consider renaming Section 3.2 to "Watertight Integrity Test" to match Section 05831.

Paragraphs C and D refer to tolerances of the system and therefore I feel that title should be left as is.

Construction Engineers

Contractors (Any additional contacts beyond “C” above.)
Gordon Olsen of Olsen Beal-We do not have any comments for this specification

Suppliers

Consultants (as required) (Any additional contacts beyond “C” above.)

FHWA (To be accomplished as part of the two-week process before submitting to the Standards and Specifications Section for inclusion on the Standards Committee agenda.) (This is in addition to the requirements of UDOT Policy 08A5-1, procedure 08A5-1.3.)

Anthony Sarhan-FHWA-I have no comment at this time. The specs are still under review in our office and I will let you know of any comments as they arise.

Others (as appropriate)

E. Other impacted areas, systems, or personnel. (Consider all impacts and possible changes to these areas during the preparation process. Coordinate with all appropriate areas for the respective item. List all impacts and action taken.)

1. Minimum Sampling and Testing Guide (MS&T Guide)

No change.

2. Business Systems (Electronic Bid System, Project Development Business System, Electronic Program Management, Computer-Aided Drafting and Design, etc.)

No change.

3. Implementation Plan (Provide detailed instructions on how the subject item will be implemented to include notification of all interested parties and training requirements.)

No training issues are anticipated.

F. Costs? (Estimates are acceptable.)

1. Additional costs to average bid item price.

No additional costs are anticipated.

2. Operational (For example, maintenance, materials, equipment, labor, administrative, programming).

No additional costs are anticipated.

3. Life cycle cost.

No additional costs are anticipated.

G. Benefits? (Provide details that can be used to complete a Cost – Benefit Analysis.) (Estimates are acceptable.) (If no costs, what is the benefit of making this change?)

Clarifications, updates and corrections will improve Specification. No costs are anticipated.

H. Safety Impacts?

No safety impacts.

I. History? Address issues relating to the current usage of the item and past reviews, approvals, and/or disapprovals.

Not applicable

Priority Explanation

Enter the appropriate priority in the box on the first page of the document.

Priority 1 Upon posting, this impacts all projects in construction and design with a Change Order, Addenda, and immediate change to projects being advertised.

Priority 2 Upon posting, this impacts projects being advertised.

Priority 3 Upon posting, the approved standard takes effect **four weeks** later for projects being advertised.

SECTION 05822

BEARINGS

PART 1 GENERAL

1.1 SECTION INCLUDES

A. Furnish and install bearings, and mating surface.

1.2 RELATED SECTIONS

A. Section 05120: Structural Steel

1.3 REFERENCES

A. AASHTO M 270: Standard Specification for Structural Steel for Bridges

B. AASHTO LRFD Bridge Construction Specifications

C. ASTM A 240: Standard Specification for Chromium and Chromium-Nickel Stainless Steel Plate, Sheet, and Strip for Pressure Vessels and for General Applications

D. Federal Specifications

1.4 DEFINITIONS Not Used

1.5 SUBMITTALS

A. As per Section 05120.

1. 6 PAYMENT PROCEDURES

A. Bearings are included in the contract lump sum price for Structural Steel, Structural Concrete, or Pre-stressed Concrete.

PART 2 PRODUCTS

2.1 POLYTETRAFLUOROETHYLENE (PTFE)

A. Meet AASHTO LRFD Bridge Construction Specifications, Section 18.

B. Material composed of either filled or unfilled virgin PTFE sheets as specified.

C. Unfilled sheets must have minimum thickness of 0.03 inch, and filled sheets must be 0.10 inch ± 0.01 inch thick.

2.2 STAINLESS STEEL PLATE

A. Meet ASTM A 240, Type 304.

B. Minimum thickness of 1/4 inch and minimum 20 micro inch (root mean square) mirror-like finish on the side that contacts the PTFE.

2.3 ADHESIVE MATERIAL

A. Meet Federal Specifications MMM-A-134.

B. Epoxy resin, FEP film or approved equal.

2.4 PREFORMED FABRIC PAD

A. Meet AASHTO LRFD Bridge Construction Specifications.

B. As specified with dimensions in compliance with the plans.

2.5 ELASTOMERIC BEARING PAD

A. Meet AASHTO LRFD Bridge Construction Specifications, Section 18.

B. Place so markings are visible.

2.6 STRUCTURAL STEEL

A. Painted Structural Steel: As specified. Meet AASHTO M 270, Grade 36 Type steel.

B. Unpainted Weathering Steel for girders: As specified. Meet AASHTO M 270, grade 50W.

2.7 MANUFACTURE - EXPANSION BEARINGS

A. The preformed fabric pad must be bonded to the PTFE at the bearing manufacturer's factory under controlled conditions and in strict conformance to the adhesive system manufacturer's written instructions.

B. Bond the filled or unfilled PTFE to a rigid, confining substrate that limits the flow (elongation) of the confined PTFE to not more than 0.009 inch under a load of 2,000 psi for 15 minutes at 78 degrees F for a 2 inch x 3 inch test sample. Do not bond the PTFE to the preformed fabric pad.
   1. Make the bonded PTFE surface smooth and free from bubbles.
   2. Polish the filled PTFE surfaces.

C. Weld the stainless steel with ~~1/8~~⅛ inch continuous fillet welds to the sole plate.
   1. Do not allow the weld metal to project beyond the plane of the sliding surface.
   2. Use Type 309 electrodes or filler rods.
   3. Use welding procedures compatible with the stainless steel specified.

D. Prevent damage to the sliding surface.

E. Protect stainless steel and PTFE sliding surfaces during manufacture, shipment, and erection.
   1. Wipe the sliding surfaces clean immediately before setting the girder in place.
   2. Reject unit when the sliding surfaces are damaged by scratches, weld splatter, gouges, or overspray from painting, or other defects.
   3. Replace the damaged units with new units in good condition at no additional cost to the Department.

F. Coefficient of friction between the PTFE and the stainless steel not more than 0.10 at 2,000 psi bearing pressure.

PART 3 EXECUTION Not Used

~~Not used~~

END OF SECTION

SECTION 05831

EXPANSION JOINT MODIFICATION

PART 1 GENERAL

1.1 SECTION INCLUDES

A. Remove existing expansion joint system from bridge deck and install new expansion joint system.

1.2 RELATED SECTIONS

A. Section 03055: Portland Cement Concrete

B. Section 03211: Reinforcing Steel and Welded Wire

C. Section 03310: Structural Concrete

D. Section 05120: Structural Steel

E. Section 05832: Expansion Joint

1.3 REFERENCES

A. AASHTO M 111: Standard Specification for Zinc (Hot-Dip Galvanized) Coatings on Iron and Steel Products

B. AASHTO M 235: Standard Specification for Epoxy Resin Adhesives

C. AASHTO M 270: Standard Specification for Structural Steel for Bridges

D. American Institute of Steel Construction (AISC)

1.4 DEFINITIONS Not Used

1.5 SUBMITTALS Not Used

1.6 FABRICATION

A. Shop drawing requirements: Comply with Section 05120.

B. Certification: Comply with Section 05120, except that AISC, Simple Steel Bridge Structures (SBR) Certification is required.

PART 2 PRODUCTS

2.1 MATERIALS

A. Portland Cement Concrete: Class AA(AE). Refer to Section 03055.

B. Cement: Refer to Section 03055.

C. Structural Steel: Galvanize all structural steel as specified. AASHTO M 111.
   1. Steel Extrusions: AASHTO M 270, Grade 36.
   2. Plates: AASHTO M 270, Grade 36.
   3. Round Bars: AASHTO M 270, Grade 36.

D. Lubricating Material: Follow manufacturer recommendation.

E. Epoxy Resin Adhesive: Follow AASHTO M 235.
   1. Type II.
   2. Choose class rating consistent with the application temperature.

F. Reinforcing Steel (Coated): Refer to Section 03211.

G. Rigid Plastic Foam: Refer to Section 05832.

H. Neoprene Gland: Refer to Section 05832.

2.2 JOINT SYSTEMS

A. Refer to Section 05832.

2.3 TOLERANCES

A. Refer to Section 05832.

PART 3 EXECUTION

3.1 PREPARATION

A. Asphalt Removal
   1. Make saw cuts parallel to existing joints to define the removal area.
   2. Remove asphalt surfacing in such a manner that the concrete deck is not damaged.

B. Concrete Saw Cuts
   1. Place the saw cuts at the offset shown on the plans and saw 1 inch deep in the concrete deck parallel to existing joints to define work area.

C. Prevent debris from falling into streams, pedestrian areas, and traffic areas and on railroad tracks.

3.2 CONCRETE REMOVAL

A. Use jackhammer method to remove existing concrete.
   1. Partial Depth Removal: Use 30-pound class hand operated jackhammers or smaller.
   2. Full Depth Removal: Use 90-pound class hand operated jackhammers or smaller.
   3. Operate jackhammers at an angle greater than 45 degrees as measured from the deck surface.

B. Parapet:
   1. Remove parapet concrete in the prescribed limits shown on the plans.
   2. Where existing electrical conduit is encountered, protect the conduit from damage.

3.3 REINFORCING STEEL

A. Existing Reinforcing Steel: Clean steel that remains in place thoroughly of all corrosion and adhering materials by sandblasting.

B. New Reinforcing Steel: Place coated reinforcing steel after sandblasting operations are complete.

3.4 SYSTEM INSTALLATION

A. Refer to Section 05832.

3.5 PLACE CONCRETE

A. Clean concrete and steel surfaces before coating with an epoxy adhesive. Follow adhesive manufacturer's application instructions.

B. Place concrete according to Section 03055 and Section 03310.

3.8 WATERTIGHT INTEGRITY TEST

A. Refer to Section 05832.

END OF SECTION

SECTION 05832

EXPANSION JOINT

PART 1 GENERAL

1.1 SECTION INCLUDES

A. Materials and procedures for installing expansion joint systems.

1.2 RELATED SECTIONS

~~A. Section 03055: Portland Cement Concrete~~

~~B~~A. Section 05120: Structural Steel

1.3 REFERENCES

A. AASHTO M 111: Standard Specification for Zinc (Hot-Dip Galvanized) Coatings on Iron and Steel Products

B. AASHTO M 270: Standard Specification for Structural Steel for Bridges

C. ASTM C 578: Standard Specification for Rigid, Cellular Polystyrene Thermal Insulation

D. ASTM D 395: Standard Test Methods for Rubber Property-Compression Set

E. ASTM D 412: Standard Specification for Vulcanized Rubber and Thermoplastic Elastomer-Tension

F. ASTM D 471: Standard Test Method for Rubber Property – Effect of Liquids

G. ASTM D 573: Standard Test Method for Rubber – Deterioration in an air oven

H. ASTM D 1149: Standard Test Method for Rubber Deterioration-Surface Ozone Cracking in a Chamber

I. ASTM D 2240: Standard Test Method for Rubber Property – Durometer Hardness

J. American Institute of Steel Construction (AISC)

1.4 DEFINITIONS

A. Expansion Joint System: Extruded neoprene seal element inserted into and bonded to a steel extrusion.

1.5 SUBMITTALS

A. Five copies of shop drawings for all fabricated structural steel materials. For details, refer to Section 05120.

PART 2 PRODUCTS

2.1 JOINT SYSTEMS LIST

A. The following systems are acceptable and are detailed in the plans.
   1. Wabo Strip Seal System
   2. D. S. Brown Strip Seal System

B. Use only one strip seal system on any single project.

2.2 STRUCTURAL STEEL

A. As specified.

B. Steel Extrusion: Meet AASHTO M 270, Grade 36.
   1. Galvanized per AASHTO M 111.

C. Plates and Round Bars: Meet AASHTO M 270, Grade 36

D. Lubricating Material: Follow manufacturer's recommendation.

E. Neoprene Gland: Single convolution type with physical properties that comply with the ~~following~~ requirements in Table 1.~~:~~

Table 1

Properties for Neoprene Gland		
Property	**Requirements**	**ASTM**
Tensile Strength, min. psi	2,000	D 412
Elongation at Break, min. percent	250	D 412
Hardness, Type A Durometer (Modified)	(55 ± 5)	D 2240
Compression Set, 70 hours at 212 degrees F Method B (Modified)	40 percent	D 395
Oven Aging, 70 hours at 212 degrees F Tensile strength, loss, max. Elongation, loss, max.	 20 percent 20 percent	 D 573
Hardness, Type A Durometer (Points change)	0 to + 10	D 2240
Oil Swell, ASTM Oil 3, 70 hours at 212 degrees F Weight Change, max.	45 percent	D 471
Ozone Resistance 20% Strain, 300 pphm, in air at 104 degrees F (wiped with toluene to remove contamination)	No cracks	D 1149

2.3 RIGID PLASTIC FOAM

A. Any preformed, extruded, cellular polystyrene thermal insulation material that has a water absorption property of 0.3 or less.

B. Meet ASTM C 578.

2.4 FABRICATION - EXPANSION JOINT

A. Comply with Section 05120, except AISC, Simple Steel Bridge Structures (SBR) Certification is required.

2.5 SOURCE QUALITY CONTROL - EXPANSION JOINT

A. After fabrication of the expansion joint and anchorage system, examine the gland face and top of the extruded steel shape of each section for straightness. Use a string line stretched taut from curb point to curb angle point or necessary construction joint end.

B. Shop Tolerances: Steel surfaces must not deviate in straightness by more than ~~1/8~~⅛ inch. When string line is stretched between either end and the point of maximum departure from true, the surface must not deviate more than $^{3}/_{32}$ inch.

PART 3 EXECUTION

3.1 INSTALLATION OF EXPANSION JOINT SYSTEM

A. Install expansion joint system using manufacturer's recommendations. A factory-trained representative must be present during setting of the system, placement of concrete, and installation of the neoprene seal element.

B. Joint Width:
   1. Form the joint width using rigid plastic foam as shown on the plans. Anchor securely.
   2. Maintain separation of sections by placing rigid plastic foam between sections of the concrete parapet.

C. Joint Gland:
   1. After the complete steel extrusion installation, install the gland so that the length of the joint has a continuous seal.
   2. Lubricate the steel extrusion cavity before installing the neoprene gland.
   3. Remove the foam used to form the joint opening and any other objects that may interfere with the installation and operation of the gland so the gland convolution hangs freely after installation.

3.2 FIELD QUALITY CONTROL

A. Test expansion system in the presence of the Engineer to verify that joint areas can hold water for one hour without leakage.

B. If leaking occurs during testing, remove any leaking seals, clean steel extrusion grooves, and install new seals.

C. Field Tolerances for Expansion Joint: Re-examine steel surfaces again for straightness and shop tolerance requirements after installing joint system in its final position and before placing concrete.

D. Final In-place Tolerances for Expansion Joint:
   1. Re-examine the extrusion gland face again after concrete placement. Deviations from the string line of more than ~~1/4~~¼ inch are not allowed. The parallel extrusion faces must not deviate from each other by more than 1/8 inch at any location.
   2. Finish the top of the extrusion to the grade requirements of the concrete or bituminous material being placed on the bridge deck.

END OF SECTION

Standards Committee Submittal Sheet

Name of preparer: Ray Cook
Title/Position of preparer: Senior Design Engineer, Bridge Design
Specification/Drawing/Item Title: Box Culvert Specifications
Specification/Drawing Number: 02645 & 02646

Enter appropriate priority level:
(See last page for explanation) **2008**

Sheet not required on editorial or minor changes to standards. Check with Standards Section.

NOTES:

1. All Submittal Sheets must be completed and sent to the Standards and Specifications Section by the Standards Committee suspense date as shown on the Web. (http://www.udot.utah.gov/index.php/m=c/tid=303)
2. The Preparer of the Submittal Sheet or the Standards Committee member (or authorized substitute) responsible for the submittal must be present at the Standards Committee meeting and capable of discussing and answering all questions related to the submittal. The item will be postponed to a later meeting if one of these people is not present.
3. Notify the Standards and Specifications Section immediately of any changes that impact the presentation to include absence of sponsor or delay in presentation.

Complete the following: (Use additional pages as needed.)

A. Why? Detail the reason for changing the Standard (Specification or Drawing), what has initiated a new Standard, or what has caused a new or changed item of interest.

Section 02645, Precast Concrete Box and Three-Sided Culvert Structures:

1. Revised for 2008 Specification Book.
2. Updated references.
3. More complete description of submittal items.
4. Added requirement for damproofing for precast structures with minimum soil cover of 3 ft or less.
5. Other miscellaneous changes/corrections.

Section 02646, Concrete Box Culvert

1. New specification
2. Allows the substitution of precast concrete box culverts for cast-in-place concrete box culverts. The bid item will be "Concrete Box Culvert" bid as Lump Sum. The Contractor can either build the box culvert as detailed or substitute a precast concrete box culvert.
3. References Section 02645 for precast concrete box culvert requirements.

B. How is Measurement and Payment handled? Existing (from the measurement and payment document), modified, or new measurement and payment to be included with all Standard Specifications or Supplemental Specifications.

Section 02645 – No change to existing Measurement and Payment.

Section 02646 – New Measurement and Payment required. See below.

Section 02646: Concrete Box Culvert

#	**026460010**	**Concrete Box Culvert**	**Lump Sum**
Includes all labor, equipment, and materials necessary to complete the item. No additional payment is made for substitutions.			

C. Stakeholder Notification for AGC and ACEC:

By email provide the AGC and ACEC Standards Committee member a copy of all pertinent information relating to the specification or drawing. Detail all responses below. Indicate if no comments were received.

Note: There is a two-week response time set for this item.

Refer to the Standards Committee Web site, Members page at http://www.udot.utah.gov/index.php/m=c/tid=659 for the respective e-mail addresses.

AGC Comments: (Use as much space as necessary.)

Email sent to Mont Wilson, AGC, 7/26/07. No response received.

ACEC Comments: (Use as much space as necessary.)

Email sent to Tyler Yorgason, ACEC, 7/26/2007. Comments received. (See attached.)

D. Stakeholders? From the list provided, document the stakeholders contacted, detailing: the company, name of contact, how contacted (by phone, email, hard copy, or in person), concerns, and comments of the change. Stakeholders:

Note: There is a two-week response time set for this item. Allow Stakeholders two weeks to process and respond to coordination requests. All areas should try to complete review and comment as soon as possible but within two weeks.

In-house (for example, preconstruction, materials, construction, safety, design, maintenance) (Include all applicable in-house areas even if not listed above.)

Sent by email to the following on 7/26/07:

Region District Engineers

Reg 1, Kevin Griffin – No reply
Reg 1, Denis Simpir – No reply
Reg 2, Betty Purdie – No reply
Reg 2, Rob Wight – Comments received (Michelle Page). See attached.
Reg 3, Bob Westover – No comments
Reg 3, Scott Andrus – No comments
Reg 4, Hugh Kirkham – No comments (Steve Ogden)
Reg 4, Robert Dowell – No reply
Reg 4, Jim McConnell – No reply

Region Materials Engineers

Reg 1, Rodney Terry – No reply
Reg 2, John Butterfield – No reply
Reg 3, Jim Cox – No comments
Reg 4, Larry Gay – No reply

Region Preconstruction Engineers

Reg 1, Rex Harris – No reply
Reg 2, Bill Lawrence – No comments
Reg 3, Brent Schvaneveldt – No comments
Reg 4, Mike Miles – No reply

Construction Engineers

(See District Engineers)

Contractors (Any additional contacts beyond "C" above.)

None.

Suppliers

Jerry Rasmussen, AMCOR Precast; Randy Wahlen, Mountain States Concrete Pipe Association – Comments received. Significant follow-up discussions. As noted on the comment form, one outstanding comment exists which came in just as we were submitting. This comment should be resolved by the committee meeting.

Consultants (as required) (Any additional contacts beyond "C" above.)

None.

FHWA (To be accomplished as part of the two-week process before submitting to the Standards and Specifications Section for inclusion on the Standards Committee agenda.) (This is in addition to the requirements of UDOT Policy 08A5-1, procedure 08A5-1.3.)

Anthony Sarhan, FHWA – No comments at this time.

Others (as appropriate)

Tim Biel, Central Materials – No reply

E. Other impacted areas, systems, or personnel. (Consider all impacts and possible changes to these areas during the preparation process. Coordinate with all appropriate areas for the respective item. List all impacts and action taken.)

1. Minimum Sampling and Testing Guide (MS&T Guide)

   No change.

2. Business Systems (Electronic Bid System, Project Development Business System, Electronic Program Management, Computer-Aided Drafting and Design, etc.)

   Add bid item for Concrete Box Culvert.

3. Implementation Plan (Provide detailed instructions on how the subject item will be implemented to include notification of all interested parties and training requirements.)

   N/A.

F. Costs? (Estimates are acceptable.)

1. Additional costs to average bid item price.

   No additional cost.

2. Operational (For example, maintenance, materials, equipment, labor, administrative, programming).

   N/A

3. Life cycle cost.

G. Benefits? (Provide details that can be used to complete a Cost – Benefit Analysis.) (Estimates are acceptable.) (If no costs, what is the benefit of making this change?)

Allows Contractor to substitute precast concrete box culverts for cast-in-place box culverts, potentially accelerating construction and reducing cost.

H. Safety Impacts?

None.

I. History? Address issues relating to the current usage of the item and past reviews, approvals, and/or disapprovals.

None.

Priority Explanation

Enter the appropriate priority in the box on the first page of the document.

Priority 1 Upon posting, this impacts all projects in construction and design with a Change Order, Addenda, and immediate change to projects being advertised.

Priority 2 Upon posting, this impacts projects being advertised.

Priority 3 Upon posting, the approved standard takes effect **four weeks** later for projects being advertised.

UDOT STRUCTURES DIVISION
COMMENT AND RESOLUTION SHEET

CODES:
A. ACCEPT COMMENT—WILL BE CORRECTED, ADDED, OR CLARIFIED.
B. DESIGNER WILL EVALUATE.
C. DELETE COMMENT
D. DEPARTMENT TO EVALUATE.

DOCUMENT CONTROL NUMBER: N/A	REVIEW TYPE: STANDARDS	REVIEWER(S): VARIOUS	DATE: 8/08/07
DESCRIPTION: BOX CULVERT SPECIFICATIONS	DESIGNER: UDOT	DISCIPLINE: STRUCTURES	CRM:

ITEM NO.	DWG. NO.(1)	COMMENTS	CODE(2)	RESPONSE(2)	FINAL DISPOSITION(3)
		COMMENTS FROM KARL VERHAEREN, ACEC			
1	02645	Article 1.4 A. 1. c. – Delete word "State" – this could be confusing to some Department personnel – Don't think it's necessary to the intent.	A		
2	02645	Article 1.4 A. 3. - Add "The" at beginning of sentence.	A		
3	02645	Article 3.3 E. – Delete this paragraph (E.) Section 02324 doesn't exist. Don't need to say anything about compaction, as it is covered under above paragraph (D. "Backfill… as specified in 02056" – this includes compaction requirements)	A		
4	02646	Article 1.2 A. - Section 02056 is "Embankment, Borrow, and Backfill"	A		
5	02646	Eliminate Article 1.4 – "Definitions" if not being used.	C	New UDOT specification standard.	
		RANDY WAHLEN (MSCPA), JERRY RASMUSSEN (AMCOR)			
1	02645	Based on the review of MSCPA, Geneva Pipe and Amcor Precast, we recommend that C 1577 be substituted for C 1433 in the UDOT 02645 and 02646 Specifications that are currently be re-written with no need to multiply steel areas by 1.25 as was done in the past.	B	This comment came in very late. It will be evaluated and discussed with Randy and Jerry. UDOT has some reservations about the ASTM C 1577 spec. A resolution should be achieved by the Standards Committee meeting. If accepted, changes would consist of changing the reference and potentially some minor adjustments to the remainder of the specifications.	

(1) Indicate drawing no./page no. or use "G" for general comment.
(2) To be filled out by Designer.
(3) To be determined in subsequent comment resolution meeting/discussion (list date).

Note: The intended use of this form is to provide a means for the Department to comment on submitted structural design plans and calculations. All comments must be satisfactorily resolved and incorporated into the contract documents before the design can be approved.

UDOT STRUCTURES DIVISION
COMMENT AND RESOLUTION SHEET

CODES:
A. ACCEPT COMMENT—WILL BE CORRECTED, ADDED, OR CLARIFIED.
B. DESIGNER WILL EVALUATE.
C. DELETE COMMENT
D. DEPARTMENT TO EVALUATE.

DOCUMENT CONTROL NUMBER: N/A	REVIEW TYPE: STANDARDS	REVIEWER(S): VARIOUS	DATE: 8/08/07
DESCRIPTION: BOX CULVERT SPECIFICATIONS	DESIGNER: UDOT	DISCIPLINE: STRUCTURES	CRM:

ITEM NO.	DWG. NO.(1)	COMMENTS	CODE(2)	RESPONSE(2)	FINAL DISPOSITION(3)
		COMMENTS FROM MICHELLE PAGE, REGION 2 CONSTRUCTION			
1	Section 02645	The only thing that appeared to be missing here was a reference regarding the plant inspection of all precast boxes by a UDOT representative from Central Materials, coordinated in advance through the RE . . . Note: This holds true for all precasting. Consider requiring a precast schedule as part of the submittal so UDOT would know when to anticipate having an inspector available.	A/C	This is a good comment and would apply to several specifications. However, after discussions with Central Materials, this requirement belongs in the UDOT Quality Management Plan for Precast / Prestressed Concrete. Therefore, no change will be made to this specification. (Currently this is not covered in the QMP's, but it will be added.)	
2	Section 02646	Consider adding the headwall verification by the Contractor to the Substitutions section - i.e. any changes to the headwall, including but not limited to redesign and additional materials, due to precast concrete box culvert sections will be at the Contractor's expense.	A		
3	Section 02646	Consider adding a waterproof membrane to all precast concrete box culverts (i.e. across the top with a 1 foot overlap down each side), especially those with minimum cover, as the joints are the most critical part of going precast versus cast in place. This extends the life of the culvert by reducing the penetration of salts into the joints and at a minimal cost. However, I believe there is a particular depth of cover where the rate of return is minimal.	A	We will add a requirement for Damproofing to all concrete box culverts that have a minimum soil cover of 3 ft and less.	

(1) Indicate drawing no./page no. or use "G" for general comment.
(2) To be filled out by Designer.
(3) To be determined in subsequent comment resolution meeting/discussion (list date).

Note: The intended use of this form is to provide a means for the Department to comment on submitted structural design plans and calculations. All comments must be satisfactorily resolved and incorporated into the contract documents before the design can be approved.

SECTION 02645

PRECAST CONCRETE BOX AND THREE-SIDED CULVERT STRUCTURES

PART 1 GENERAL

1.1 SECTION INCLUDES

A. Material and procedures for fabricating and installing single cell precast concrete box culverts and precast conventionally reinforced concrete three-sided culvert structures.

1.2 RELATED SECTIONS

A. Section 02056: ~~Common Fill~~ Embankment, Borrow, and Backfill

B. Section 02317: Structural Excavation

~~C. Section 02324: Compaction~~

~~D~~C. Section 03055: Portland Cement Concrete

~~E~~D. Section 03211: Reinforcing Steel and Welded Wire

~~F~~E. Section 03310: Structural Concrete

~~G~~F. Section 03390: Concrete Curing

G. Section 07111: Dampproofing (New specification coming in Oct 2007)

1.3 REFERENCES

A. AASHTO M 198: Joints for Circular Concrete Sewer and Culvert Pipe Using Flexible Watertight Gaskets

B. AASHTO LRFD Bridge Design Specifications

C. ASTM C 877: Standard Specification for External Sealing Bands for Concrete Pipe, Manholes, and Precast Box Sections

D. ASTM C 1433: Standard Specification for Precast Reinforced Concrete Box Sections for Culverts, Storm Drains, and Sewers

E. ASTM C 1504: Standard Specification for Manufacture of Precast Reinforced Concrete Three-Sided Structures for Culverts and Storm Drains

F. UDOT Quality Management Plan

G. UDOT Structures Design Quality Plan

1.4 DEFINITIONS Not Used

1.5 SUBMITTALS

A. ~~Shop Drawings:~~ Furnish to the Engineer:~~.~~
   1. Shop drawings for all fabricated materials:
      a. Submit ~~F~~five copies on ~~half-size~~ 11 inch by 17 inch sheets with a 1½ inch blank margin on the left-hand edge.
      b. Detail all phases of construction including layout, joint details, lifting devices, casting methods, construction placement and details of any cast-in-place sections. Note proposed transportation methods.
      c. Include the project designation data and structure number in the lower right-hand corner of each sheet.
      d. Prepare shop drawings under the stamp of a Utah PE.
   2. Design calculations ~~for Precast Concrete Three-Sided Structures~~ signed and ~~stamped~~ sealed by a Utah Professional Engineer (PE) for all precast concrete three-sided structures and for precast concrete box culverts requiring modified designs or special designs for sizes and loads other than those shown in Table 1 and 2 of ASTM C 1433.~~.~~
      a. Not required for ASTM C 1433 standard designs.
      b. Certify that the design has been checked in accordance with the UDOT Structures Design Quality Plan.
   3. The Engineer reserves the right to retain these drawings and calculations up to 14 calendar days without granting an increase in the number of working days for the project. This is reduced to 7 days when drawings are submitted electronically. This right applies each time the drawings are submitted.
   ~~3. Place the State project designation data in the lower right-hand corner of each sheet.~~

~~4. Prepare shop drawings under stamp of a Utah PE.~~

~~B. Department rejects units fabricated prior to written approval.~~

1.6 ACCEPTANCE

A. Precast concrete box culverts and precast concrete three-sided culvert structures may be accepted at a reduced price when the concrete strength is below that specified.
   1. Price adjustment pay factor following Section 03310.

B. The Department rejects units fabricated before written approval of the fabricator's shop drawings.

PART 2 PRODUCTS

2.1 CONCRETE

A. Wet Cast Concrete: Class 3A(AE). Follow Section 03055.

B. Dry Cast Concrete:
   1. Minimum cement content: 470 lb/yd^3 of concrete
   2. Maximum water/cement ratio: 0.40
   3. Mix design: Submit for approval

2.2 REINFORCING STEEL AND WELDED WIRE

A. Coated. Refer to Section 03211.

2.3 JOINT SEALANT

A. Meet AASHTO M 198.

B. Use a flexible butyl-blend material with a minimum cross-section of 1 ½ -square inches as a joint sealant for box culverts.

C. Maintain the joint material at 70 degrees F or greater during placement.

2.4 JOINT WRAP

A. Refer to ASTM C 877.

2.5 DAMPPROOFING

A. Refer to Section 07111.

2.5 QUALITY ASSURANCE

A. Department pre-qualifies pre-cast concrete box and three-sided culvert section manufacturers in accordance with the UDOT Quality Management Plan: Pre-cast/Prestressed Concrete Structures.

B. Permanently mark each precast unit with date of casting and supplier identification. Stamp markings in fresh concrete.

C. Prevent cracking or damage during handling and storage of precast units.

D. Replace cracked or damaged precast units at no additional cost to the Department.

PART 3 EXECUTION

3.1 MANUFACTURE

A. Precast Concrete Box Culverts:
   1. Meet ASTM C 1433.
   2. Multiply steel reinforcement requirements shown in tables by 1.25, unless designed for HS-25 or greater loading.
   3. Provide minimum reinforcing steel spacing 4 inches around circumference and 8 inches longitudinal.
   4. Provide 1 inch minimum concrete cover to reinforcing steel for box sections covered with 2 feet of fill or greater.
   5. Provide 2 inch minimum concrete cover to all reinforcing steel for box sections covered with less than 2 feet of fill.
   6. Unless otherwise approved by the Engineer, do not locate horizontal and vertical changes in alignment at a joint between precast segments of a precast concrete box culvert.

7. For modified designs or special designs for sizes and loads other than those shown in Table 1 and 2 of ASTM C 1433, comply with the design criteria used to develop the standard precast box culverts in ASTM C 1433, except use HS-25 live loading.

B. Precast Concrete Three-Sided Structures:
   1. Meet requirements in ASTM C 1504 with the following exceptions:
      a. Design structure in compliance with AASHTO LRFD Bridge Design Specifications, Section 12.14.
      b. Design for HL-93 live loading.
   2. Provide minimum reinforcing steel spacing of 4 inches around circumference and 8 inches longitudinal.
   3. Provide 1 inch minimum concrete cover to reinforcing steel for three-sided sections covered with 2 feet of fill or greater.
   4. Provide 2 inch minimum concrete cover to all reinforcing steel for three-sided sections covered with less than 2 feet of fill.

C. Portland Cement Concrete: Follow Section 03055.

D. Concrete Curing: Follow Section 03390.

3.2 PREPARATION

A. Excavating, Trenching, Bedding, and Backfill:
   1. Refer to Section 02317.

3.3 BEDDING AND BACKFILL

A. Over-excavate the material under the box location in compliance with Section 02317 to a minimum depth of 4 inches.
   1. Replace over-excavated material with granular backfill borrow as specified in Section 02056.
   2. Provide a minimum bedding of 4 inches of granular backfill borrow.

B. Level and compact bedding material to provide uniform support of the structure along its entire supported width and length.

C. Use a loose sand leveling course no greater than 2 inch in depth if needed in addition to the granular backfill borrow bedding.
   1. If loose sand is added, excavate the area to the appropriate depth to accommodate the backfill and leveling course.

D. Backfill structure with granular backfill borrow as specified in Section 02056.

E. ~~Compact following Section 02324.~~

~~F~~. Refer to project plans for excavation, bedding, and backfill requirements where a three-sided culvert structure is placed on a footing.

3.4 INSTALLATION

A. Inspect precast elements for defects before lowering into trench.

B. Repair or replace any defective, damaged or unsound precast elements.

C. Use a trench width adequate to place and compact bedding material. Minimum outside width of trench is the outside width of structure plus 2 feet.

D. Lay precast elements starting at the downstream end.

E. Carefully lower precast elements into the trench with suitable equipment to prevent damage.

F. Remove all dirt and foreign material from joints. Prevent dirt and material from re-entering joints.

G. Apply joint sealant furnished by culvert manufacturer to box culvert.
   1. Place the joint material on the bottom half of the groove (bell) of the box last placed.
   2. Place the balance of the joint material on the top half of the tongue (spigot) of the box to be set.
   3. Place the material about 1 inch from the leading edge of the groove and tongue.

H. Disassemble joint, check position of joint sealant, repair alignment, and re-install when adjoining elements cannot be pulled together to meet minimum joint requirements.

I. Close the joints tightly.

J. Do not disturb previously completed joints during laying operation.

K. Do not lay precast elements when water is in the trench.

L. Clean top and sides of concrete surface at joints before placing joint wrap.

M. Use appropriate pulling devices to avoid misalignment and damage to box sections.

N. Place three-sided structure sections against previous sections as tightly as possible, while maintaining alignment.
   1. Do not exceed joint tolerances in the stamped drawings.

O. Apply joint wrap when specified in the plans.

3.5 STEEL REINFORCEMENT

A. Follow Section 03211.

3.6 JOINTS

A. Make joint opening between box sections less than 1 inch measured face to face of adjoining concrete surfaces.
   1. Reject box sections when the installation tolerance cannot be met due to casting variations.
   2. Prevent soil from being forced into the joint as the box sections are placed.

B Provide shear transfer devices for box culvert sections with less than 2 feet of cover.
   1. Device or method must be capable of transferring a minimum shear load of 3,000 lb~~s~~/ft of joint width through top slab of adjacent units.
   2. When using individual devices, space closer than 2.5 ft center to center with ~~a minimum of~~ at least two per joint.

C. Mechanically connect the exterior segments of three-sided precast concrete structures at all top joints within a minimum length of 12 feet from each end of the structure.
   1. Use ~~a minimum of~~ at least four mechanical connections per joint with a maximum spacing of 10 feet.
   2. Galvanize all plates, shapes and hardware.

D. Connect three-sided precast concrete structures to the footing/pedestal 2 feet from the outermost exterior edge of the structure at all four corners with a galvanized rigid mechanical connection.
   1. Locate the connection on the interior face of the segment to allow for future inspection.

3.7 LIFTING HOLES

A. Provide a maximum of four lifting holes in the top slab, each having a maximum diameter of 3 inches.

B. Locate holes to avoid interference with the reinforcing steel.

C. Plug lift holes and lift insert recesses with a 1/1 sand to cement grout. Finish flush with all concrete surfaces.

3.8 CONNECTION TO CAST-IN-PLACE CONCRETE

A. Where precast box sections join cast-in-place concrete, project the reinforcing steel ~~a minimum of~~ at least 12 inches out of the precast box section and square off the concrete face.

3.9 REPAIRS

A. Box sections may be repaired as allowed in the referenced specification only when approved in advance by the Engineer.

B. Making repairs in advance of approval will be cause for rejection.

3.10 MINIMUM LENGTH

A. Do not use pre-cast segments less than 5 ft~~foot~~~~feet~~ in lay length.

3.11 DAMPPROOFING

A. Apply dampproofing to the full length of all concrete box culverts and three-sided structures that have a minimum soil cover of 3 ft and less. Apply dampproofing to other concrete box culverts and three-sided structures when specified on the plans. Refer to Section 07111.

END OF SECTION

SECTION 02646

CONCRETE BOX CULVERT

PART 1 GENERAL

1.1 SECTION INCLUDES

A. Requirements for concrete box culvert.

1.2 RELATED SECTIONS

A. Section 02056: Embankment, Borrow, and Backfill

B. Section 02645: Precast Concrete Box and Three-Sided Culvert Structures

C. Section 03055: Portland Cement Concrete

D. Section 03152: Concrete Joint Control

E. Section 03211: Reinforcing Steel and Welded Wire

F. Section 03310: Structural Concrete

G. Section 07111: Dampproofing (New specification coming in Oct. 2008)

1.3 REFERENCES

A. ASTM C 1433: Standard Specification for Precast Reinforced Concrete Box Sections for Culverts, Storm Drains, and Sewers

1.4 DEFINITIONS

A. Not used.

1.5 SUBMITTALS

A. Not used.

1.6 SUBSTITUTIONS

A. Unless specified otherwise in the Contract Documents, the Contractor may substitute precast reinforced concrete box culverts for the cast-in-place reinforced concrete box culverts shown in the plans. When substituting, meet all requirements and submittals of Section 02645 as modified herein.

B. Provide an equivalent hydraulic opening to that shown in the plans.

C. A single-cell precast box of equivalent area may be substituted for a double-cell box with cell spans less than or equal to 6 ft. Any revision in the cell height from that shown on the plans is not permitted unless approved by the Engineer.

D. Two single-cell precast boxes may be substituted for a double-cell box when approved by the Engineer.

E. Make all plan changes required by substituting precast options for cast-in-place designs. This includes but is not limited to any changes to the headwalls, wingwalls and aprons, detailing of attachment of precast sections to the cast-in-place elements, labor and any redesign.

F. Notify the Department in writing, on or before the preconstruction conference, which concrete box culvert type will be used at each location.

1.7 ACCEPTANCE

A. Concrete box culverts may be accepted at a reduced price when the concrete strength is below that specified.
   1. Price adjustment pay factor following Section 03310.

PART 2 PRODUCTS

2.1 CONCRETE

A. Refer to Section 03310.

2.2 REINFORCING STEEL AND WELDED WIRE

A. Coated. Refer to Section 03211.

2.3 PRECAST CONCRETE BOX CULVERT

A. Refer to Section 02645.

B. Provide cast-in-place concrete headwalls, wingwalls and aprons as shown in the plans. Detail in the fabricator's drawings the connection between the precast end section and the cast-in-place elements and any modifications to the plans required by substituting a precast concrete box culvert for the cast-in-place concrete box.

C. Design multiple-cell precast reinforced concrete box culverts and all custom designs according to the criteria used to develop the single-cell precast box culverts (ASTM C 1433), except use HS-25 live loading.

D. Unless otherwise approved by the Engineer, do not locate horizontal and vertical changes in alignment at a joint between precast segments of a precast concrete box culvert.

2.5 WATERSTOP

A. Provide waterstops as shown in the plans.

B. Refer to Section 03152.

2.6 GRANULAR BACKFILL BORROW

A. Refer to Section 02056.

2.7 DAMPPROOFING

A. Refer to Section 07111.

PART 3 EXECUTION

3.1 GENERAL

A. Structural Concrete: Follow Sections 03055 and 03310.

B. Reinforcing Steel and Welded Wire: Follow Section 03211.

3.2 CAST-IN-PLACE CONCRETE BOX CULVERT

A. Allow the base slab and footing to cure for 24 hours before constructing the remainder of the culvert.

B. Construct the side walls and top slab monolithically, unless the wall height exceeds 10 ft. Keep the construction joints vertical and at right angles to the axis of the culvert.

C. Construct shear keys in the top of the side walls to anchor the top slab when the side walls and top slab are not placed monolithically.

D. Construct wingwalls monolithically.

E. Do not backfill until the concrete has been in place at least 7 days and has attained the specified strength.

3.3 PRECAST CONCRETE BOX CULVERT

A. Refer to Section 02645.

B. Construct all cast-in-place concrete elements as shown in the plans and as modified in the approved fabricator's shop drawings.

3.4 DAMPPROOFING

A. Apply dampproofing to the full length of all concrete box culverts that have a minimum soil cover of 3 ft and less. Apply dampproofing to other concrete box culverts when specified on the plans. Refer to Section 07111.

END OF SECTION

Standards Committee Submittal Sheet

Name of preparer: Ray Cook
Title/Position of preparer: Senior Design Engineer, Bridge Design
Specification/Drawing/Item Title: Prestressed Concrete
Specification/Drawing Number: 03412

Enter appropriate priority level:
(See last page for explanation) **2008**

Sheet not required on editorial or minor changes to standards. Check with Standards Section.

NOTES:

1. All Submittal Sheets must be completed and sent to the Standards and Specifications Section by the Standards Committee suspense date as shown on the Web. (http://www.udot.utah.gov/index.php/m=c/tid=303)
2. The Preparer of the Submittal Sheet or the Standards Committee member (or authorized substitute) responsible for the submittal must be present at the Standards Committee meeting and capable of discussing and answering all questions related to the submittal. The item will be postponed to a later meeting if one of these people is not present.
3. Notify the Standards and Specifications Section immediately of any changes that impact the presentation to include absence of sponsor or delay in presentation.

Complete the following: (Use additional pages as needed.)

A. Why? Detail the reason for changing the Standard (Specification or Drawing), what has initiated a new Standard, or what has caused a new or changed item of interest.

Section 03412, Prestressed Concrete was updated as part of the effort for the 2008 specification book. Changes include the following.

1. *Updated references.*
2. *Reorganized so that material and construction items are in the correct sections.*
3. *Updated submittal section to be similar to other specifications.*
4. *Added requirement to comply with PCI fabrication tolerances.*
5. *Other miscellaneous changes.*

B. How is Measurement and Payment handled? Existing (from the measurement and payment document), modified, or new measurement and payment to be included with all Standard Specifications or Supplemental Specifications.

Add the following to the existing Prestressed Concrete measurement and payment items:

Includes all labor, equipment, and materials necessary for fabrication, delivery, and erection of prestressed concrete members.

C. Stakeholder Notification for AGC and ACEC:

By email provide the AGC and ACEC Standards Committee member a copy of all pertinent information relating to the specification or drawing. Detail all responses below. Indicate if no comments were received.

Note: There is a two-week response time set for this item.

Refer to the Standards Committee Web site, Members page at http://www.udot.utah.gov/index.php/m=c/tid=659 for the respective e-mail addresses.

AGC Comments: (Use as much space as necessary.)

Email sent to Mont Wilson, AGC, 7/26/07. No response received.

ACEC Comments: (Use as much space as necessary.)

Email sent to Tyler Yorgason, ACEC, 7/26/2007. Received response with comments .

D. Stakeholders? From the list provided, document the stakeholders contacted, detailing: the company, name of contact, how contacted (by phone, email, hard copy, or in person), concerns, and comments of the change. Stakeholders:

Note: There is a two-week response time set for this item. Allow Stakeholders two weeks to process and respond to coordination requests. All areas should try to complete review and comment as soon as possible but within two weeks.

In-house (for example, preconstruction, materials, construction, safety, design, maintenance) (Include all applicable in-house areas even if not listed above.)

Sent by email to the following on 7/26/07:

Region District Engineers

Reg 1, Kevin Griffin – No reply
Reg 1, Denis Simpir – No reply
Reg 2, Betty Purdie – No reply
Reg 2, Rob Wight – No comments (Michelle Page).
Reg 3, Bob Westover – No comments
Reg 3, Scott Andrus – No comments
Reg 4, Hugh Kirkham – No comments (Steve Ogden)
Reg 4, Robert Dowell – No reply
Reg 4, Jim McConnell – No reply

Region Materials Engineers

Reg 1, Rodney Terry – No reply
Reg 2, John Butterfield – No reply

Reg 3, Jim Cox – No comment
Reg 4, Larry Gay – No reply

Region Preconstruction Engineers
Reg 1, Rex Harris – No reply
Reg 2, Bill Lawrence – No comment
Reg 3, Brent Schvaneveldt – No reply
Reg 4, Mike Miles – No reply

Construction Engineers
(See District Engineers)

Contractors (Any additional contacts beyond "C" above.)

None.

Suppliers

Sent by email to the following:

Lee Wegner, Eagle Precast – No reply
Steve Winfrey, Encon Utah – No reply

Consultants (as required) (Any additional contacts beyond "C" above.)

FHWA (To be accomplished as part of the two-week process before submitting to the Standards and Specifications Section for inclusion on the Standards Committee agenda.) (This is in addition to the requirements of UDOT Policy 08A5-1, procedure 08A5-1.3.)

Anthony Sarhan, FHWA – No comments at this time.

Others (as appropriate)

Tim Biel, Central Materials – No Reply.

E. Other impacted areas, systems, or personnel. (Consider all impacts and possible changes to these areas during the preparation process. Coordinate with all appropriate areas for the respective item. List all impacts and action taken.)

1. Minimum Sampling and Testing Guide (MS&T Guide)

No change.

2. Business Systems (Electronic Bid System, Project Development Business System, Electronic Program Management, Computer-Aided Drafting and Design, etc.)

No change.

3. Implementation Plan (Provide detailed instructions on how the subject item will be implemented to include notification of all interested parties and training requirements.)

N/A.

F. Costs? (Estimates are acceptable.)

1. Additional costs to average bid item price.

Potential Cost Increases:
1. Requiring AISC Simple Steel Bridge Structures (SBR) Certification for miscellaneous steel fabrication could increase the cost. It is not expected to be significant.
2. Requirement to take appropriate measures to prevent girder camber from exceeding tolerances (Article 3.8D) could increase costs. It will not apply to every project and is not expected to be significant. The requirement is necessary to facilitate construction.
3. Addition of PCI fabrication tolerances are not expected to affect the cost since both local fabricators are PCI certified.

2. Operational (For example, maintenance, materials, equipment, labor, administrative, programming).

N/A.

3. Life cycle cost.

G. Benefits? (Provide details that can be used to complete a Cost – Benefit Analysis.) (Estimates are acceptable.) (If no costs, what is the benefit of making this change?)

A better organized, more clear specification.

H. Safety Impacts?

None

I. History? Address issues relating to the current usage of the item and past reviews, approvals, and/or disapprovals.

None

Priority Explanation

Enter the appropriate priority in the box on the first page of the document.

Priority 1	Upon posting, this impacts all projects in construction and design with a Change Order, Addenda, and immediate change to projects being advertised.
Priority 2	Upon posting, this impacts projects being advertised.
Priority 3	Upon posting, the approved standard takes effect **four weeks** later for projects being advertised.

UDOT STRUCTURES DIVISION
COMMENT AND RESOLUTION SHEET

CODES:
A. ACCEPT COMMENT—WILL BE CORRECTED, ADDED, OR CLARIFIED.
B. DESIGNER WILL EVALUATE.
C. DELETE COMMENT
D. DEPARTMENT TO EVALUATE.

DOCUMENT CONTROL NUMBER: N/A	REVIEW TYPE: STANDARDS	REVIEWER(S): KARL VERHAEREN	DATE: 8/08/07
DESCRIPTION: SECTION 03412: PRESTRESSED CONCRETE	DESIGNER: UDOT	DISCIPLINE: STRUCTURES	CRM:

ITEM NO.	DWG. NO.(1)	COMMENTS	CODE(2)	RESPONSE(2)	FINAL DISPOSITION(3)
1	03412	Eliminate Article 1.4 – "Definitions" if not being used.	C	New UDOT specification standard.	
2	03412	Article 1.3 K. – Suggest making "plan" plural, as there are several – one or more of which may apply.	A		
3	03412	Article 1.5 B. 2. - End subparagraph 2 after "receipt" and eliminate subparagraph 3. Claims and/or requests for added contract time – for any reason - including delayed response to submittals and notification requirements are more than adequately addressed in the standard general provisions and should not be reiterated or modified in any individual sections.	A		
4	03412	Article 1.5 C. – Change "in advance of" to "before". Delete "of the drawings".	A		
5	03412	Article 1.5 D. & 1.5 D. 5. & 3.5 D. – Change "prior to" to "before"	A		
6	03412	Article 1.5 D. 7. - While I understand the intent, I don't think stating an owners "preference" adds anything to a contract specification. Either require it – or don't – but I don't think stating a preference belongs in a written specification.	C	This is similar to Structural Steel specification previously approved. It is a precursor to requiring a certified erector.	
7	03412	Should the certification in article 2.6 D. also be stated under article 1.4 – Submittals? Also, the chart in 3.2 A. 2.? – release plan in 3.4 L.?	A		
8	03412	3.8 E. – Delete "of the concrete in the member" before ", or for seven days…"	A		

(1) Indicate drawing no./page no. or use "G" for general comment.
(2) To be filled out by Designer.
(3) To be determined in subsequent comment resolution meeting/discussion (list date).

Note: The intended use of this form is to provide a means for the Department to comment on submitted structural design plans and calculations. All comments must be satisfactorily resolved and incorporated into the contract documents before the design can be approved.

UDOT STRUCTURES DIVISION
COMMENT AND RESOLUTION SHEET

CODES:
A. ACCEPT COMMENT—WILL BE CORRECTED, ADDED, OR CLARIFIED.
B. DESIGNER WILL EVALUATE.
C. DELETE COMMENT
D. DEPARTMENT TO EVALUATE.

DOCUMENT CONTROL NUMBER: N/A	REVIEW TYPE: STANDARDS	REVIEWER(S): KARL VERHAEREN	DATE: 8/08/07
DESCRIPTION: SECTION 03412: PRESTRESSED CONCRETE	DESIGNER: UDOT	DISCIPLINE: STRUCTURES	CRM:

ITEM NO.	DWG. NO.(1)	COMMENTS	CODE(2)	RESPONSE(2)	FINAL DISPOSITION(3)
9	03412	Replace “prior to” with “before” – three places	A		

(1) Indicate drawing no./page no. or use “G” for general comment.
(2) To be filled out by Designer.
(3) To be determined in subsequent comment resolution meeting/discussion (list date).

Note: The intended use of this form is to provide a means for the Department to comment on submitted structural design plans and calculations. All comments must be satisfactorily resolved and incorporated into the contract documents before the design can be approved.

SECTION 03412

PRESTRESSED CONCRETE

PART 1 GENERAL

1.1 SECTION INCLUDES

A. Pretensioning, fabricating, curing, transporting, ~~and~~ storing, and erecting prestressed concrete members.

1.2 RELATED SECTIONS

A. Section 03055: Portland Cement Concrete

B. Section 03211: Reinforcing Steel and Welded Wire

C. Section 03310: Structural Concrete

~~C~~D. Section 03390: Concrete Curing

~~D~~E. Section 05120: Structural Steel

F. Section 05822: Bearings

1.3 REFERENCES

A. AASHTO M 111: Zinc (Hot-dip Galvanized) Coatings on Iron and Steel Products

B. AASHTO M 169: Steel Bars, Carbon, and Alloy, Cold-Finished

C. AASHTO M 203: Steel Strand, Uncoated Seven-Wire for Prestressed Concrete

~~B~~D. AASHTO M 270: Structural Steel for Bridges

E. AASHTO/AWS D1.5: Bridge Welding Code

~~C. AASHTO Standard Specifications for Highway Bridges, Division II~~

~~D~~F. AASHTO LRFD Bridge Construction Specifications

~~E~~G. ASTM C 150: Portland Cement

H. American Institute of Steel Construction (AISC)

I. Precast/Prestressed Concrete Institute (PCI)

~~F~~J. ~~Federal Standards~~US Military Specifications

~~G~~K. UDOT~~'s~~ Quality Management Plans

1.4 DEFINITIONS Not Used

~~A. Not used.~~

~~1.4 DELIVERY, STORAGE, AND HANDLING~~

~~A. Prestressing Steel:~~

~~1. Protect against physical damage and corrosion during shipping, handling, and storing.~~

~~2. Clearly mark the shipping package or form with handling instructions, and information about the corrosion inhibitor including date, place, safety orders, and instructions for use.~~

~~B. Transport precast girders in an upright position. Support the girders during transportation in approximately the same point(s) they will be supported when installed.~~

~~C. Prevent cracking or damaging precast units during storage, hoisting, and handling.~~

~~D. Installation of lifting devices is permitted provided that any portion of the devices that protrudes above the top of the girder is removed when no longer needed.~~

~~E. Do not ship prestressed concrete members until tests on concrete cylinders, manufactured of the same concrete and cured under the same conditions as the girders, indicate that the concrete of the particular member has attained a compressive strength equal to the specified design compressive strength of the concrete in the member.~~

1.5 SUBMITTALS

A. Certifications:

1. Certification stating the manufacturer's minimum guaranteed ultimate tensile strength for each sample of prestressing steel.
2. AISC Simple Steel Bridge Structures (SBR) Certification for structural steel fabrication.

3. The certified calibration chart required ~~in~~by this Section, article 3.2 A.

B. Prestressing Steel:

1. Furnish three 6 ft long strand samples from each heat or lot that will be used on the project, at no additional cost to the Department.
2. Testing may require 14 calendar days after the date of receipt.

~~B~~C. Submit five sets of working shop drawings of the prestressing system ~~before beginning the project or ordering materials~~ sufficiently before the start of the affected work to allow time for review by the Engineer and correction by the Contractor without delaying the work.

1. Show complete details and substantiating calculations of the method, ~~and~~ materials, and equipment to be used in the prestressing operations, including any additions or rearrangement of reinforcing steel ~~alterations~~ and any revision in concrete dimensions from that ~~those~~ shown on the plans.
2. Outline ~~Show~~ the ~~M~~method and sequence of stressing. I~~i~~nclude~~ing~~ complete specifications and details of the prestressing steel, working stresses, and all other data pertaining to the prestressing operation. Include the proposed arrangement of the prestressing steel in the members. Include the cutting or release pattern.
3. ~~Do not order materials or begin work until receiving final approval of the shop detail drawings.~~Do not begin fabrication or installation of prestressing material before approval of the drawings.
4. Do not deviate from the approved shop drawings unless authorized in writing. Contractor is responsible for costs incurred due to faulty detailing or fabrication.
5. Engineer reserves the right to retain these drawings up to 14 calendar days without granting an increase in the number of working days for the project. This is reduced to 7 days when drawings are submitted electronically. This right applies each time the drawings are submitted.

~~C~~D. Erection Plan: Submit an Erection Plan 10 days ~~prior to~~ before beginning erection of prestressed concrete members for documentation purposes only. The Engineer will not approve the Erection Plan. Fully illustrate the proposed method of erection. Provide complete details of the process including, but not limited to:

1. Temporary supports, bracing, guys, dead-men, lifting devices, connection details, and attachments to bridge members.
2. The schedule and sequence of erection, location of cranes, crane capacities, location of lifting points on the bridge members, member weights and any other assumed loads during progressive stages of construction.
3. Complete details for all anticipated phases and conditions during erection.

4. Minimum number and arrangement of primary members, secondary members, connections, etc. that must be installed, braced, and/or properly connected to provide structural integrity and stability.
5. Incorporate into the plan the requirements from this ~~s~~Section, ~~A~~article 3.7.
6. A professional engineer, licensed in the State of Utah, will approve, sign, and seal the Erection Plan and supporting calculations. The professional engineer must approve all changes to the Erection Plan ~~prior to~~ before implementation.
7. UDOT prefers a PCI Certified Erector.

1.6 ACCEP~~E~~TANCE

A. Girders may be accepted at a reduced price when the average compressive strength is at least 94 percent of the specified strength.
   1. Price reduction factor is as follows:

$$\text{Price Reduction Factor} = 1.00\text{-}0.30 \left\{ \frac{f'c - AVG}{0.06\, f'c} \right\}^2$$

   Where: $f'c$ = specified 28-day compressive strength in ~~P~~psi.
   AVG = average compressive strength of 3 cylinder breaks in ~~P~~psi.
   2. Department will calculate the amount paid by multiplying the contract unit price for the prestressed concrete member by the price reduction factor.

PART 2 PRODUCTS

2.1 CONCRETE

A. Portland Cement: Type I or Type II, or Type III, low alkali.

B. Type III cement: conform to ASTM C 150, Table 2, for moderate sulfate resistance.

C. Class AA(AE) concrete per Section 03055, except as modified below.
   1. Air entraining admixture to provide 5.0 to 7.5 percent entrained air.
   2. Minimum compressive strength 5,000 psi at 28 days, or as specified in the plans.
   3. Minimum compressive strength for transfer of prestressing force is 4,000 psi or as specified in the plans.
   4. Maximum slump is 7 inches.
   5. Use ~~C~~coarse aggregate gradation meeting the ~~3/4~~¾ inch No. 4 sieve per Section 03055~~, Table 2~~.
   6. Minimum cementitious content must be 611 lb~~s~~/yd^3.

7. Water-Cementitious ratio must not exceed 0.44 by weight, including free-water in the aggregates.

D. Girders: Reject if the average 28-day compressive strength of representative cylinders is less than 94 percent of the specified strength. Core tests are not permitted for compressive strength tests.

2.2 PRESTRESSING STEEL

A. Meet AASHTO M 203. ~~1/2~~½ inch or 0.6 inch diameter, Grade 270.

~~B. Replace prestressing steel that has damage, loose rust, pitting, or serious corrosion. Slight rusting that occurs after placement in the beds is acceptable if it does not cause visible pits.~~

~~C. Do not oil or grease Oiling or greasing the strand is not acceptable.~~

2.3 REINFORCING STEEL ~~(COATED)~~

A. ~~As specified.~~ Use coated or corrosion-resistant reinforcing steel as specified in ~~Refer to~~ Section 03211.

2.4 ELASTOMERIC BEARING PADS

A. ~~As specified~~ in. ~~AASHTO LRFD Bridge Construction Specifications, Standard Specifications for Highway Bridges, Division II, Article 18.2.~~Refer to Section 05822.

2.5 ZINC-RICH PAINT

A. As specified~~. Federal Standard TT-P-641.~~ in U.S~~.~~ Military Specification MIL-P-24441/20]

~~2.6 THREADED RODS~~

~~A.Stainless Steel per Section 05120. AASHTO M 270, Grade 36250.~~

2.6~~7~~ ~~BEARING PLATE~~MISCELLANEOUS STEEL ITEMS

A. ~~As specified.~~Threaded Rods: AASHTO M 270, Grade 36.

B. Carbon-Steel Shapes and Plates: AASHTO M 270, Grade 36~~250~~.

C. Carbon-Steel Headed Studs: AASHTO M 169. Automatic end welded.

D. Welding: AASHTO/AWS D1.5.

E. Galvanize all structural steel items permanently cast into concrete per AASHTO M 111.

~~2.8 SOURCE QUALITY CONTROL~~

~~A. Prestressing Steel:~~

~~1. Furnish three 5 ft long strand samples from each reel or portion of reel that will be used on the project, at no additional cost to the Department.~~

~~2. Testing may require 14 calendar days after the date of receipt without granting an increase in contract time.~~

~~3. The contract time is increased by the number of days of delay if test results are not returned within 14 calendar days and construction operations are delayed. Make written notification for any additional claim resulting from delay within 5 working days after approval of the materials.~~

2.7~~9~~ QUALITY ASSURANCE

A. Use a UDOT prequalified ~~Department pre-qualifies Contractor as a~~ supplier of pre-cast concrete products in accordance with the UDOT~~'s~~ Quality Management Plan: Precast/Prestressed Concrete Structures.

PART 3 EXECUTION

3.1 FABRICATION

A. Comply with camber and dimensional tolerances of PCI MNL 135.

B. Fabricate structural steel per Section 05120. Unless otherwise specified, structural steel for prestressed concrete members requires AISC Simple Steel Bridge Structures (SBR) Certification.

3.2~~1~~ PREPARATION

A. All equipment (jacks, pressure gauges, load cells) used to stress tendons must be accurate.
   1. Calibrate each jack and its gauge as a unit with the cylinder extension in the final jacking force position.
   2. Furnish a certified calibration chart.

B. Calibrate the load cell and provide an indicator to determine the prestressing force in the tendon. The range of the load cell must be such that the lower 10 percent of the manufacturer's rated capacity is not used in determining the jacking stress.

C. The prestressing force may be tested by Engineer.

D. Provide sufficient labor, equipment, and material to install and support testing equipment at the prestressing tendons, and to remove the equipment when testing is completed.

3.3 PRESTRESSING STEEL

A. Clearly mark the shipping package or form with handling instructions, and information about the corrosion inhibitor including date, place, safety orders, and instructions for use.

B. Protect against physical damage and corrosion during shipping, handling, and storing.

C. Replace prestressing steel that has damage, loose rust, pitting, or serious corrosion. Slight rusting that occurs after placement in the beds is acceptable if it does not cause visible pits.

D. Do not oil or grease prestressing strand.

3.4~~2~~ PRETENSIONING

A. Install and support testing equipment at the prestressing tendons, and remove the testing equipment after the testing is completed.

B. Tension all prestressing steel with hydraulic jacks so that the force in the prestressing steel is not less than the value shown.

C. Do not allow the initial stress to exceed 70 percent of the specified minimum ultimate tensile strength.

D. Average working stress in the prestressing steel must not exceed 60 percent of the specified minimum ultimate tensile strength of the prestressing steel unless otherwise shown.

E. Maximum temporary tensile stress (jacking stress) in prestressing steel must not ~~to~~ exceed 75 percent of the specified minimum ultimate tensile strength.

F. Working force and working stress are the force and stress remaining in the prestressing steel after all losses peculiar to prestressing have either taken place or been provided for. These losses include creep and shrinkage of concrete, elastic compression of concrete, creep of steel, and take up of anchorages.

G. Anchor the prestressing steel at stresses (initial stress) that result in the ultimate retention of working forces not less than those shown.

H. The loss in stress in pretensioned, prestressing steel due to creep and shrinkage of concrete, creep of steel, and elastic compression of concrete is ~~not~~ as shown on the plans. ~~assumed to be 35,000 psi. If lightweight concrete is used, the loss is assumed to be 40,000 psi.~~

~~I. Do not cut or release prestressing steel in pretensioned members until the concrete in the member has attained a compressive strength of not less than the value shown on the plans or 4,000 psi, whichever is the greater.~~

~~J~~I. Check prestressing steel strands in pretensioned members, if tensioned individually, for loss of prestress not more than 12 hours before placing concrete for the members. Use methods and equipment acceptable to Engineer.

~~K~~J. Re-tension all strands that show a loss of prestress in excess of three percent.

~~L~~K. Increase the calculated elongation of the prestressing steel in pretensioned members to compensate for the loss in stress when it is tensioned at a temperature appreciably lower than the estimated temperature of the concrete and the prestressing steel at the time of initial set of the concrete. Do not allow the jacking stress to exceed 75 percent of the specified minimum ultimate tensile strength.

~~M~~L. Maintain a minimum lateral eccentricity of prestress when cutting and releasing prestressing steel in pretensioned members. Submit a cutting or release pattern to the Engineer for prior approval.

M. Do not cut or release prestressing steel in pretensioned members until the concrete in the member has attained a compressive strength of not less than the value shown on the plans or 4,000 psi, whichever is the greater.

N. Except when otherwise shown in the plans, c~~C~~ut off all pretensioned, prestressing steel flush with the end of the member. Clean and paint ~~and~~ the exposed ends of the strands ~~prestressing steel,~~ and ~~then clean and paint~~ a 1-~~-~~inch strip of adjoining concrete.~~; or~~ Alternatively, cut the strands a minimum of 1 inch back from the girder end, fill the recess with grout, and finish flush with the girder ends.

~~O~~1. Use a wire brush or abrasive blast cleaning to r~~R~~emove all dirt and residue not firmly bonded to the metal or concrete surfaces.

~~P~~2. Cover the surfaces with a thick application of zinc-rich paint. ~~Apply two applications to surfaces that are not covered by concrete or mortar.~~ Thoroughly mix the paint at the time of application and work it into any voids in the strands~~prestressing tendons~~.

3. Apply two applications to surfaces that are not covered by concrete or mortar.

3.5~~3~~ PLACING CONCRETE

A. Do not place concrete into forms until the placement of the reinforcement and prestressing steel has been Department inspected and approved.

B. Vibrate the concrete internally, externally, or both.

C. Avoid displacing reinforcing steel or strands.

D. When cast-in-place concrete will later be cast against the top surfaces of precast beams or girders, finish these surfaces to a coarse texture by brooming with a stiff, coarse broom. Before shipping, clean such surfaces of laitance or other foreign material by sandblasting.

3.6~~4~~ LIMITATIONS

A. Refer to Section 03310~~055~~ for hot and cold weather limitations.

B. Remove side forms of the prestressing members within one to two days provided satisfactory arrangement has been made for curing the concrete.

C. Adequately support the members at all times to prevent dead load bending until after the anchorages for pretensioned members have been released.

3.75 CURING

A. Cure as specified in Section 03390.

3.6 INSPECTION

A. Provide free entry to inspectors while the work on the contract is being performed.

B. Reject materials showing defects during or previous to installation.

3.8 DELIVERY, STORAGE, AND HANDLING

A. Store units with adequate dunnage and bracing and protect units to secure them from movement and prevent cracking, distortion, warping, contact with soil, staining, and other physical damage.
   1. Store units, unless otherwise specified, with dunnage across full width of each bearing point.
   2. Place stored units so identification marks are clearly visible, and so units can be inspected.

B. Transport precast girders in an upright position. Support the girders during transportation in approximately the same point(s) they will be supported when installed.

C. Prevent cracking or damaging precast units during storage, hoisting, and handling.

D. Take appropriate measures to prevent girder camber from exceeding the tolerances specified in this Section, article 3.1 until deck is placed.

E. Installation of lifting devices is permitted provided that any portion of the devices that protrudes above the top of the girder is removed when no longer needed.

F. Do not ship prestressed concrete members until tests on concrete cylinders manufactured of the same concrete and cured under the same conditions as the girders indicate that the concrete of the particular member has attained a compressive strength equal to the specified design compressive strength, or for seven days after concrete placement, whichever is longer.

3.9~~7~~ ERECTION

A. Maintain responsibility for all aspects of girder erection during all stages of construction, including the protection of prestressed concrete members, the workers, and the traveling public.

B. Erect all prestressed concrete members in compliance with the Erection Plan. Erect girders in a manner that prevents damage to all elements of the structure.

C. Temporarily support, anchor and brace all erected superstructure members as necessary for stability and to resist wind or other loads until they are permanently secured to the structure. Support, anchor and brace all superstructure members as detailed in the Erection Plan before allowing traffic under the bridge.

D. Design temporary supports and falsework in accordance with the current edition of the AASHTO LRFD Bridge Construction Specifications, Section 3 "Temporary Works."

E. Accurately assemble all parts as specified in the contract documents or erection drawings. Follow any match-marks.

F. Carefully handle materials so that no parts will be cracked, chipped, broken or otherwise damaged.

G. Use lifting devices in a manner that does not cause damaging, bending, or torsional forces.

H. Before the members are erected, clean bearing surfaces and surfaces that will be in permanent contact.

I. Do not open traffic under a partially-erected bridge superstructure, unless allowed in the Erection Plan or approved by the professional engineer who approved, signed, and sealed the Erection Plan.

END OF SECTION

Standards Committee Submittal Sheet

Name of preparer: Ray Cook
Title/Position of preparer: Senior Design Engineer, Bridge Design
Specification/Drawing/Item Title: Noise Wall Standard Specification and Drawings
Specification/Drawing Number: Section 02861; Drawings SW 2, 3A, 3B, 4A, 4B, 4C, 5, & 6.

Enter appropriate priority level:
(See last page for explanation) **2008**

Sheet not required on editorial or minor changes to standards. Check with Standards Section.

NOTES:

1. All Submittal Sheets must be completed and sent to the Standards and Specifications Section by the Standards Committee suspense date as shown on the Web. (http://www.udot.utah.gov/index.php/m=c/tid=303)
2. The Preparer of the Submittal Sheet or the Standards Committee member (or authorized substitute) responsible for the submittal must be present at the Standards Committee meeting and capable of discussing and answering all questions related to the submittal. The item will be postponed to a later meeting if one of these people is not present.
3. Notify the Standards and Specifications Section immediately of any changes that impact the presentation to include absence of sponsor or delay in presentation.

Complete the following: (Use additional pages as needed.)

A. Why? Detail the reason for changing the Standard (Specification or Drawing), what has initiated a new Standard, or what has caused a new or changed item of interest.

These revisions are due to changing noise wall panels to full-height panels, updating aesthetic requirements and preparing for 2008 standard specification and drawing book as follows:

SW Standard Drawngs:

1. More complete description of wall placement options (SW2).
2. Drawings modified to require full-height noise panels. This required re-design of the panels.
3. Drawings modified to require a form liner texture in place of the exposed aggregate surface, which is very labor and time intensive and thus very expensive. The texture is in addition to the 5" panel thickness, 1" on each side (to provide adequate relief). Standard texture options are presented on SW6.
4. Addition of a more aesthetic low cost end treatment (SW3A & SW4A).
5. Addition of a transition from retaining/noise wall to retaining wall only for situations that require it (SW4B).
6. Addition of details for a pilaster post similar to what was used on the I-15 Reconstruction project in SLC (SW5).

Section 02861: Precast Noise and Retaining/Noise Walls
1. Updated to reflect changes to the standard drawings.
2. Updated references.
3. Reorganized so the materials and construction requirements are in the correct sections.
4. Other miscellaneous changes.

B. How is Measurement and Payment handled? Existing (from the measurement and payment document), modified, or new measurement and payment to be included with all Standard Specifications or Supplemental Specifications.

Modify Measurement and Payment items as follows (only modified items are included here):

1. Delete bid items for 3 ft, 4 ft and 5 ft precast noise wall.
2. Modify bid item for 6 ft precast noise wall to say "6 ft and less."
3. Add bid item for Precast Noise Wall 17 ft.
4. Modify bid item for Precast Retaining/Noise Wall 7 ft to say "7 ft and less."

Add to each item: Includes all labor, equipment, and materials necessary for fabrication, delivery, and installation of precast concrete noise walls (or precast concrete retaining/noise walls, as appropriate). Includes the cost of all architectural elements, such as architectural texture, pilaster posts, end treatments, and concrete stain.

C. Stakeholder Notification for AGC and ACEC:

By email provide the AGC and ACEC Standards Committee member a copy of all pertinent information relating to the specification or drawing. Detail all responses below. Indicate if no comments were received.

Note: There is a two-week response time set for this item.

Refer to the Standards Committee Web site, Members page at http://www.udot.utah.gov/index.php/m=c/tid=659 for the respective e-mail addresses.

AGC Comments: (Use as much space as necessary.)

Email sent to Mont Wilson, AGC, 7/26/07. No response received.

ACEC Comments: (Use as much space as necessary.)

Email sent to Tyler Yorgason, ACEC, 7/26/2007. Comments received (See attached).

D. Stakeholders? From the list provided, document the stakeholders contacted, detailing: the company, name of contact, how contacted (by phone, email, hard copy, or in person), concerns, and comments of the change. Stakeholders:

Note: There is a two-week response time set for this item. Allow Stakeholders two weeks to process and respond to coordination requests. All areas should try to complete review and comment as soon as possible but within two weeks.

In-house (for example, preconstruction, materials, construction, safety, design, maintenance) (Include all applicable in-house areas even if not listed above.)

Sent by email to the following on 7/26/07:

Region District Engineers

Reg 1, Kevin Griffin – No reply
Reg 1, Denis Simpir – No reply
Reg 2, Betty Purdie – No reply
Reg 2, Rob Wight – No comments (Michelle Page).
Reg 3, Bob Westover – No comments
Reg 3, Scott Andrus – No comments
Reg 4, Hugh Kirkham – No reply
Reg 4, Robert Dowell – No reply
Reg 4, Jim McConnell – No reply

Region Materials Engineers

Reg 1, Rodney Terry – No reply
Reg 2, John Butterfield – No reply
Reg 3, Jim Cox – No comments
Reg 4, Larry Gay – No reply

Region Preconstruction Engineers

Reg 1, Rex Harris – No reply
Reg 2, Bill Lawrence – No comments
Reg 3, Brent Schvaneveldt – No comments
Reg 4, Mike Miles – No comments

Construction Engineers

(See District Engineers)

Contractors (Any additional contacts beyond “C” above.)

None.

Suppliers

Sent by email to the following:

Stephanie Loud, Mountain West Precast – No comments
Jeremy McIntyre, Precast Concrete Products – No reply; follow-up phone conversation – noted that texture in addition to 5" panel thickness (two sides) adds significant concrete volume to the overall wall and thus adds cost. However panel design requires it to be in addition to the 5" panel thickness.
Brent Reddekopp, Precast Concrete Products – No reply.
Dave Gilley, Harper Precast – Comments attached. Also, follow-up phone conversation to clarify and discuss issues.

Consultants (as required) (Any additional contacts beyond "C" above.)

None.

FHWA (To be accomplished as part of the two-week process before submitting to the Standards and Specifications Section for inclusion on the Standards Committee agenda.) (This is in addition to the requirements of UDOT Policy 08A5-1, procedure 08A5-1.3.)

Anthony Sarhan, FHWA – No comments at this time.

Others (as appropriate)

Randy Jefferies, I-15 NOW – Comments received (see attached).
Tim Biel, Central Materials – No reply

E. Other impacted areas, systems, or personnel. (Consider all impacts and possible changes to these areas during the preparation process. Coordinate with all appropriate areas for the respective item. List all impacts and action taken.)

1. Minimum Sampling and Testing Guide (MS&T Guide)

None.

2. Business Systems (Electronic Bid System, Project Development Business System, Electronic Program Management, Computer-Aided Drafting and Design, etc.)

Adjustment to bid items. (See section on Measurement & Payment)

3. Implementation Plan (Provide detailed instructions on how the subject item will be implemented to include notification of all interested parties and training requirements.)

The majority of these changes have previously been implemented on multiple projects.

F. Costs? (Estimates are acceptable.)

1. Additional costs to average bid item price.

Cost Savings *–*
(1) Change to full-height panels – reduces precast and installation time,
(2) Change from exposed aggregate to form-liner textures – Exposed aggregate is very labor intensive and time consuming. Fabricators indicate that using form liners are at least equivalent in cost and probably less expensive than the exposed aggregate finish.

Additional Costs *–*
(1) Using textures in addition to design panel thickness requires additional concrete – approximately $0.25 / sq ft or $3 per ft for a 12 ft high wall,
(2) Project-specific aesthetic treatments (end treatments, pilaster posts, concrete stain, etc.) – overall cost of end treatments and pilaster posts are not significant since there are two end treatments per wall (end treatments presented are low cost) and pilaster posts are spaced at 200 ft intervals or one every 16 posts. Concrete staining is estimated at $0.25 / sq ft.

2. Operational (For example, maintenance, materials, equipment, labor, administrative, programming).

Maintenance – Concrete stain may require re-staining at end of stain life.

Advantage: Concrete staining allows UDOT to re-stain over graffiti.

3. Life cycle cost.

G. Benefits? (Provide details that can be used to complete a Cost – Benefit Analysis.) (Estimates are acceptable.) (If no costs, what is the benefit of making this change?)

1. More aesthetically pleasing noise walls that are better received by the community and are more consistent with CSS principles.
2. Full-height panels expedite installation and are safer during a collision.

H. Safety Impacts?

Full-height panels improve safety during collision.

I. History? Address issues relating to the current usage of the item and past reviews, approvals, and/or disapprovals.

Priority Explanation

Enter the appropriate priority in the box on the first page of the document.

Priority 1 Upon posting, this impacts all projects in construction and design with a Change Order, Addenda, and immediate change to projects being advertised.

Priority 2 Upon posting, this impacts projects being advertised.

Priority 3 Upon posting, the approved standard takes effect **four weeks** later for projects being advertised.

UDOT STRUCTURES DIVISION
COMMENT AND RESOLUTION SHEET

CODES:
A. ACCEPT COMMENT—WILL BE CORRECTED, ADDED, OR CLARIFIED.
B. DESIGNER WILL EVALUATE.
C. DELETE COMMENT
D. DEPARTMENT TO EVALUATE.

DOCUMENT CONTROL NUMBER: N/A	REVIEW TYPE: STANDARDS	REVIEWER(S): VARIOUS	DATE: 8-8-07
DESCRIPTION: NOISE WALL STANDARD DRAWINGS	DESIGNER: UDOT	DISCIPLINE: STRUCTURES	CRM:

ITEM NO.	DWG. NO.(1)	COMMENTS	CODE(2)	RESPONSE(2)	FINAL DISPOSITION(3)
RANDY JEFFERIES, UDOT I-15 NOW					
1	SW2	Add a note requiring the noise walls to be placed outside the clear zone, unless otherwise allowed by the Region Traffic Engineer.	C	This is an instruction to the designer and belongs in the Roadway Design Manual rather than the Department standard drawings.	
2	SW2	Add a note to define when the noise wall needs to be placed at 1.2x clear zone. Is this also a Region Traffic Engineer call or are we going to this statewide? If statewide, then include the 1.2x clear zone dimension on options 1 and 2, and eliminate 3.	C	This is an instruction to the designer and belongs in the Roadway Design Manual rather than the Department standard drawings.	
3	SW2	Dimension the width of the 2% slope away from wall on the roadway side. I'd suggest 4', but as it is drawn it could be 1".	A	The intent of SW2 is to define noise wall placement. The 2% slope is shown and dimensioned on SW3A & SW4A and is not necessary for this sheet. Therefore, it will be deleted from this sheet.	
4	SW2	Related to the above, the 2% slope away from wall isn't really much. I'd suggest a 10% slope for 5'.	A	Slopes will be changed to 10% on SW 3A & SW 4A. 2'-6 min will be retained. This can be modified on a project basis, if necessary.	
5	SW2	The 10:1 max dimension is nice, but the AASHTO roadside design guide allows other slopes here, in addition to cut slopes. I suggest we eliminate the dimension since clear zone covers it.	A	Slopes will be deleted.	

(1) Indicate drawing no./page no. or use "G" for general comment.
(2) To be filled out by Designer.
(3) To be determined in subsequent comment resolution meeting/discussion (list date).

Note: The intended use of this form is to provide a means for the Department to comment on submitted structural design plans and calculations. All comments must be satisfactorily resolved and incorporated into the contract documents before the design can be approved.

UDOT STRUCTURES DIVISION
COMMENT AND RESOLUTION SHEET

CODES:
A. ACCEPT COMMENT—WILL BE CORRECTED, ADDED, OR CLARIFIED.
B. DESIGNER WILL EVALUATE.
C. DELETE COMMENT
D. DEPARTMENT TO EVALUATE.

DOCUMENT CONTROL NUMBER: N/A	REVIEW TYPE: STANDARDS	REVIEWER(S): VARIOUS	DATE: 8-8-07
DESCRIPTION: NOISE WALL STANDARD DRAWINGS	DESIGNER: UDOT	DISCIPLINE: STRUCTURES	CRM:

ITEM NO.	DWG. NO.(1)	COMMENTS	CODE(2)	RESPONSE(2)	FINAL DISPOSITION(3)
6	SW2	The concrete barrier is not drawn as it is typically installed which would be just off the shoulder. This detail could be drawn without showing the shoulder, lane, and clear zone.	A		
7	SW2	Consider requiring paving or weed barrier between the noise wall and barrier.	C	This is a good practice, but is a project specific decision. Since this is a Noise Wall Placement standard, which is being revised to only show placement options, and since there are no other references to paving or landscaping, this does not seem to be the appropriate place for this requirement.	
8	SW 3A, 02861 Spec	Does the post hole concrete really need to be air entrained since it's underground? Or maybe the allowable air entrainment range can increase.	A	Based on discussions with Materials and others, AE requirement will be deleted.	
9	SW 4A	The note in the Typical Section "Grade to drain away from wall" is open-ended. Define more specifically.	A	Will detail similar to other sections (2'-6 at 10%).	

(1) Indicate drawing no./page no. or use "G" for general comment.
(2) To be filled out by Designer.
(3) To be determined in subsequent comment resolution meeting/discussion (list date).

Note: The intended use of this form is to provide a means for the Department to comment on submitted structural design plans and calculations. All comments must be satisfactorily resolved and incorporated into the contract documents before the design can be approved.

UDOT STRUCTURES DIVISION
COMMENT AND RESOLUTION SHEET

CODES:
A. ACCEPT COMMENT—WILL BE CORRECTED, ADDED, OR CLARIFIED.
B. DESIGNER WILL EVALUATE.
C. DELETE COMMENT
D. DEPARTMENT TO EVALUATE.

DOCUMENT CONTROL NUMBER: N/A	REVIEW TYPE: STANDARDS	REVIEWER(S): VARIOUS	DATE: 8-8-07
DESCRIPTION: NOISE WALL STANDARD DRAWINGS	DESIGNER: UDOT	DISCIPLINE: STRUCTURES	CRM:

ITEM NO.	DWG. NO.(1)	COMMENTS	CODE(2)	RESPONSE(2)	FINAL DISPOSITION(3)
10	SW 5	I assume this is to become the statewide practice. Add a note to require these wherever noise walls are constructed.	C	The pilaster post is an option for the designer. It may not be appropriate in all cases. When a pilaster is used, there should be a similar element at the end of the wall. A terminus element similar to that used on the I-15 SLC project will be developed and submitted later. The aesthetic elements of the noise wall are determined by the designer on a project specific basis. They will be specified on the plans when required.	
11	SW 6	Don't we want to allow other textures, depending on community coordination?	A/C	The designer selects the appropriate texture for the project. The intent of this sheet is to provide some standard textures to promote consistency from project to project and to assist the fabricators who make a significant investment in forms and form liners. This is especially important for full-height panel forms. Standardizing textures will reduce cost. We attempted to select a variety of textures that have been commonly used on UDOT projects, as well as an exposed aggregate texture for matching existing noise walls. This does not mean that other textures cannot be used, but those shown here should be the textures commonly used.	

(1) Indicate drawing no./page no. or use "G" for general comment.
(2) To be filled out by Designer.
(3) To be determined in subsequent comment resolution meeting/discussion (list date).

Note: The intended use of this form is to provide a means for the Department to comment on submitted structural design plans and calculations. All comments must be satisfactorily resolved and incorporated into the contract documents before the design can be approved.

UDOT STRUCTURES DIVISION
COMMENT AND RESOLUTION SHEET

CODES:
A. ACCEPT COMMENT—WILL BE CORRECTED, ADDED, OR CLARIFIED.
B. DESIGNER WILL EVALUATE.
C. DELETE COMMENT
D. DEPARTMENT TO EVALUATE.

DOCUMENT CONTROL NUMBER: N/A	REVIEW TYPE: STANDARDS	REVIEWER(S): VARIOUS	DATE: 8-8-07
DESCRIPTION: NOISE WALL STANDARD DRAWINGS	DESIGNER: UDOT	DISCIPLINE: STRUCTURES	CRM:

ITEM NO.	DWG. NO.(1)	COMMENTS	CODE(2)	RESPONSE(2)	FINAL DISPOSITION(3)
COMMENTS FROM TYLER YORGASON, ACEC					
1	SW2	Options 1, 2: I believe wall needs to be outside 1.2X Clear Zone, not just outside Clear Zone	A	These dimensions will be deleted since they are not relevant to what is being shown.	
2	SW 2	Options 1, 2, and 3: Why does the slope within the clear zone outside of the shoulder need to be limited to 10:1 or flatter?	A	Slopes will be deleted, since they are covered on other sheets (SW3A & SW4A).	
3	SW 2	"Wall Overlap" Plan Detail: A minimum dimension (8', 10'??) should be identified for the maintenance access (D).	C	This is determined on a project by project basis. Also, gaps may be for purposes other than maintenance.	
4	SW 2	"Inside Clear Zone Application" Section Detail: A dimension of 2' should be shown between shoulder and barrier, and/or refer to BA Std Dwgs for placement.	A	Dimensions and slopes not related to noise wall placement will be deleted.	
5	SW 3A	Shouldn't the note (beginning "Grade to match…") under the second panel from the left read "…not **less** than 3" at low…."?	A	The intent of this note is to prevent unequal grades on either side of the wall, thus causing the wall to retain fill for which it is not designed. Because of the amount of confusion the note causes, it will be revised.	
COMMENTS FROM KARL VERHAEREN, ACEC					

(1) Indicate drawing no./page no. or use "G" for general comment.
(2) To be filled out by Designer.
(3) To be determined in subsequent comment resolution meeting/discussion (list date).

Note: The intended use of this form is to provide a means for the Department to comment on submitted structural design plans and calculations. All comments must be satisfactorily resolved and incorporated into the contract documents before the design can be approved.

UDOT STRUCTURES DIVISION
COMMENT AND RESOLUTION SHEET

CODES:
A. ACCEPT COMMENT—WILL BE CORRECTED, ADDED, OR CLARIFIED.
B. DESIGNER WILL EVALUATE.
C. DELETE COMMENT
D. DEPARTMENT TO EVALUATE.

DOCUMENT CONTROL NUMBER: N/A	REVIEW TYPE: STANDARDS	REVIEWER(S): VARIOUS	DATE: 8-8-07
DESCRIPTION: NOISE WALL STANDARD DRAWINGS	DESIGNER: UDOT	DISCIPLINE: STRUCTURES	CRM:

ITEM NO.	DWG. NO.(1)	COMMENTS	CODE(2)	RESPONSE(2)	FINAL DISPOSITION(3)
1	02861	Article 1.2 I. Don't think this should show as a reference until it is a standard.	C	These changes become effective for the 2008 spec book. The concrete staining specification will be submitted in time for the 2008 Spec Book.	
2	02861	Article 1.2 A. & B. – Title in A. is incorrect. (Changed with supplemental) B. doesn't exist.	A		
3	02861	Eliminate article 1.4 if not used.	C	New specification standard.	
4	02861	Article 1.5 A. – No need to capitalize "devices" – check capitalization throughout.	C	Change in capitalization was made to match other similar sections.	
5	02861	Article 2.5 – Change reference from 02061 to 02056 and make appropriate change to article 1.2.	A		
6	02861	Article 2.12 A. – Delete "Fabricator is responsible to" – maybe incorporate subparagraph C. under A.	A		
7	02861	Article 3.7 D. – Maybe should add "Refer to section 02056 – and add related section to article 1.2.	C	I could not find anything in the Section 02056 Part 3 that related to free draining granular backfill and Noise / Retaining Wall construction.	

(1) Indicate drawing no./page no. or use "G" for general comment.
(2) To be filled out by Designer.
(3) To be determined in subsequent comment resolution meeting/discussion (list date).

Note: The intended use of this form is to provide a means for the Department to comment on submitted structural design plans and calculations. All comments must be satisfactorily resolved and incorporated into the contract documents before the design can be approved.

UDOT STRUCTURES DIVISION
COMMENT AND RESOLUTION SHEET

CODES:
A. ACCEPT COMMENT—WILL BE CORRECTED, ADDED, OR CLARIFIED.
B. DESIGNER WILL EVALUATE.
C. DELETE COMMENT
D. DEPARTMENT TO EVALUATE.

DOCUMENT CONTROL NUMBER: N/A	REVIEW TYPE: STANDARDS	REVIEWER(S): VARIOUS	DATE: 8-8-07
DESCRIPTION: NOISE WALL STANDARD DRAWINGS	DESIGNER: UDOT	DISCIPLINE: STRUCTURES	CRM:

ITEM NO.	DWG. NO.(1)	COMMENTS	CODE(2)	RESPONSE(2)	FINAL DISPOSITION(3)
8	02861	Eliminate article 3.8 – this would be covered under the new section.	C	This spec will be implemented with the 2008 book. The Concrete Staining specification (to be submitted at a later date) will also be included in 2008 Spec Book.	
COMMENTS FROM OTHER ACEC MEMBERS					
1	SW 2, General	These sections do not provide close out for the pavement section. Will there be edge drain in front of all noise walls?	C	These are pavement design issues that are addressed by the designer on a project specific basis and are not applicable to this drawing.	
2	SW2, General	The bench behind the noise wall has been wider. If the fill slope is 2:1 behind the noise wall and a 2'-6" bench is provided, is there enough soil resistance to start the length of embedment at the top of bench.	C	A UDOT geotechnical engineer has confirmed that a 2'-6 bench is adequate for a noise wall post application.	
3	SW2, Option 1	It appears that we are to construct on private property. Also, what should be done when the adjacent property slope onto UDOT R/W.	C	The noise wall is entirely on UDOT R/W. Issues related to required construction easements and adjacent property slopes are addressed by the designer on a project specific basis.	
4	SW2, Option 2	Option 2 Detail: What should be done when the adjacent property slope onto UDOT R/W. Can UDOT drain their maintenance access area onto adjacent property owners?	C	These are design issues that are different for each project. They are addressed by the designer on a project specific basis.	

(1) Indicate drawing no./page no. or use "G" for general comment.
(2) To be filled out by Designer.
(3) To be determined in subsequent comment resolution meeting/discussion (list date).

Note: The intended use of this form is to provide a means for the Department to comment on submitted structural design plans and calculations. All comments must be satisfactorily resolved and incorporated into the contract documents before the design can be approved.

UDOT STRUCTURES DIVISION
COMMENT AND RESOLUTION SHEET

CODES:
A. ACCEPT COMMENT—WILL BE CORRECTED, ADDED, OR CLARIFIED.
B. DESIGNER WILL EVALUATE.
C. DELETE COMMENT
D. DEPARTMENT TO EVALUATE.

DOCUMENT CONTROL NUMBER: N/A	REVIEW TYPE: STANDARDS	REVIEWER(S): VARIOUS	DATE: 8-8-07
DESCRIPTION: NOISE WALL STANDARD DRAWINGS	DESIGNER: UDOT	DISCIPLINE: STRUCTURES	CRM:

ITEM NO.	DWG. NO.(1)	COMMENTS	CODE(2)	RESPONSE(2)	FINAL DISPOSITION(3)
5	SW2	Inside Clear Zone Application: What surface material is in the 5' between barrier and noise wall?	C	This is an important issue, but is a project-specific decision. Since this standard is only intended to show noise wall placement options, and since there are no other references to paving or landscaping, this does not seem to be the appropriate place for this requirement.	
6	SW 3A	Can the standard noise wall panel be use as a retaining panel to any depth?	A	Drawing SW 3A now allows the noise panel to retain up to 6" of fill.	
7	SW 4A	Typical Elevation shows that the retaining panel will have a little exposure on the non retaining side and it is a smooth finish which differs from the noise wall panel.	C	This is a small area that will be covered either by the roadside barrier or by vegetation. It should not be visible. There would be a significant cost to require partial height texture on the soil side of retaining panels for this small area.	

DAVE GILLEY, HARPER PRECAST

(1) Indicate drawing no./page no. or use "G" for general comment.
(2) To be filled out by Designer.
(3) To be determined in subsequent comment resolution meeting/discussion (list date).

Note: The intended use of this form is to provide a means for the Department to comment on submitted structural design plans and calculations. All comments must be satisfactorily resolved and incorporated into the contract documents before the design can be approved.

UDOT STRUCTURES DIVISION
COMMENT AND RESOLUTION SHEET

CODES:
A. ACCEPT COMMENT—WILL BE CORRECTED, ADDED, OR CLARIFIED.
B. DESIGNER WILL EVALUATE.
C. DELETE COMMENT
D. DEPARTMENT TO EVALUATE.

DOCUMENT CONTROL NUMBER: N/A	REVIEW TYPE: STANDARDS	REVIEWER(S): VARIOUS	DATE: 8-8-07
DESCRIPTION: NOISE WALL STANDARD DRAWINGS	DESIGNER: UDOT	DISCIPLINE: STRUCTURES	CRM:

ITEM NO.	DWG. NO.(1)	COMMENTS	CODE(2)	RESPONSE(2)	FINAL DISPOSITION(3)
1	1.5 C (P. 2)	Shouldn't installation procedures be a part of the UDOT spec and the project engineers guidance?	C	UDOT does not typically dictate detailed installation procedures and methods to contractors. The Contractor develops the specific procedures based upon his methods of construction. UDOT needs to be aware of the Contractor's plans, especially when full-height panels and posts are installed next to traffic or could impact outside our right of way.	
2	2.9 A (p. 4)	Can installer be allowed to use modern plastic shims in place of wood if they have that option?	C	We feel that plastic shims will deteriorate over time.	
3	3.1 C.2 (p6)	Placing numbers in the post mold is very difficult. Current practice has been to etch info into the face of the bottom of post after it is cast. This has worked well for Harper Precast.	A	Will allow etching of numbers.	
4	3.1 D.1(a) (p6)	Should you list rubber molds as well. These are currently the only way to produce patterns in product in a two-sided application.	A	Will add requirements for form liners.	
5	3.1 D.4(d) (p6)	I would ask that you increase to the 3/8" tolerance that is referred to in the post section. 1/8" is very difficult in a two side mold, especially when a multiple panel mold like mine is used.	A	Tolerances for posts and panels will be revised to be a function of the dimension. They will approximate established PCI precast tolerances.	
6	3.6 A	What type of caps? Grout, epoxy, plastic, rubber?	C	Current spec specifies "sealing type." Caps that seal the void meet the Department's needs.	

(1) Indicate drawing no./page no. or use "G" for general comment.
(2) To be filled out by Designer.
(3) To be determined in subsequent comment resolution meeting/discussion (list date).

Note: The intended use of this form is to provide a means for the Department to comment on submitted structural design plans and calculations. All comments must be satisfactorily resolved and incorporated into the contract documents before the design can be approved.

UDOT STRUCTURES DIVISION
COMMENT AND RESOLUTION SHEET

CODES:
A. ACCEPT COMMENT—WILL BE CORRECTED, ADDED, OR CLARIFIED.
B. DESIGNER WILL EVALUATE.
C. DELETE COMMENT
D. DEPARTMENT TO EVALUATE.

DOCUMENT CONTROL NUMBER: N/A	REVIEW TYPE: STANDARDS	REVIEWER(S): VARIOUS	DATE: 8-8-07
DESCRIPTION: NOISE WALL STANDARD DRAWINGS	DESIGNER: UDOT	DISCIPLINE: STRUCTURES	CRM:

ITEM NO.	DWG. NO.(1)	COMMENTS	CODE(2)	RESPONSE(2)	FINAL DISPOSITION(3)
7	2.1 B	Would like to know why B(AE) concrete on regular UDOT projects is air-entrained post hole concrete. My question is on design-build the (AE) requirements for B(AE) has been waived. We would like to see (AE) removed on B(AE) on all noise wall jobs considering the concrete is buried and air entrainment is for freeze thaw durability of exposed concrete.	A	Based upon discussions with Central Materials, the AE requirement will be deleted.	
8	SW 4A	Would like to see all steps stay at the same angle and 6” to 12” increments if possible.	A	There is only one step size on all panels: 30 degree angle and 12” increment.	
9	SW 6	1” depth in pattern is of concern. This is achievable, but is hard on multiple use molds which shortens the life span and in some cases damages the final product due to inadequate mold relief.	C	1” texture depth is required to provide adequate relief. Standard textures are general in nature. Actual texture used can be adjusted to address this concern.	
10	SW 6	Would like to see the large river rock listed in drawings. This pattern was used in Tooele, West Jordan, and is now being installed on State Street.	A	River rock is one of the textures shown on SW 6. This includes Large River Rock.	
11	SW 6	Would like to see the Grape Stake pattern listed in the std drawings for this pattern has been used on SR 201, the Legacy Parkway MSE wall panels have this pattern and the I-15 NOW project has this pattern. A very substantial investment has been made by Harper Precast and others on this pattern. To not include this pattern is of great concern.	C	The Grape Stake pattern as used on SR-201 and I-15 NOW has inadequate relief (3/8”) for a standard texture. Note: Grape Stake was not used for Legacy MSE wall panels. Legacy used a custom texture pattern.	

(1) Indicate drawing no./page no. or use “G” for general comment.
(2) To be filled out by Designer.
(3) To be determined in subsequent comment resolution meeting/discussion (list date).

Note: The intended use of this form is to provide a means for the Department to comment on submitted structural design plans and calculations. All comments must be satisfactorily resolved and incorporated into the contract documents before the design can be approved.

UDOT STRUCTURES DIVISION
COMMENT AND RESOLUTION SHEET

CODES:
A. ACCEPT COMMENT—WILL BE CORRECTED, ADDED, OR CLARIFIED.
B. DESIGNER WILL EVALUATE.
C. DELETE COMMENT
D. DEPARTMENT TO EVALUATE.

DOCUMENT CONTROL NUMBER: N/A	REVIEW TYPE: STANDARDS	REVIEWER(S): VARIOUS	DATE: 8-8-07
DESCRIPTION: NOISE WALL STANDARD DRAWINGS	DESIGNER: UDOT	DISCIPLINE: STRUCTURES	CRM:

ITEM NO.	DWG. NO.(1)	COMMENTS	CODE(2)	RESPONSE(2)	FINAL DISPOSITION(3)

(1) Indicate drawing no./page no. or use "G" for general comment.
(2) To be filled out by Designer.
(3) To be determined in subsequent comment resolution meeting/discussion (list date).

Note: The intended use of this form is to provide a means for the Department to comment on submitted structural design plans and calculations. All comments must be satisfactorily resolved and incorporated into the contract documents before the design can be approved.

SECTION 02861

PRECAST RETAINING/NOISE WALLS

PART 1 GENERAL

1.1 SECTION INCLUDES

A. Materials and procedures for constructing Precast Noise and Retaining/Noise Walls.

1.2 RELATED SECTIONS

A. Section 01571: ~~Temporary~~ Environmental Controls

B. Section ~~02061: Select Aggregates~~02056: Embankment, Borrow, and Backfill

C. Section 02075: Geotextiles

D~~C~~. Section 03055: Portland Cement Concrete

E~~D~~. Section 03152: Concrete Joint Control

F~~E~~. Section 03211: Reinforcing Steel and Welded Wire

G. Section 03310: Structural Concrete

H~~F~~. Section 03390: Concrete Curing

I~~G~~. Section 03392: Penetrating Concrete Sealer

J. Section 09981: Concrete Staining (New Standard coming Oct 07 for approval.)

1.3 REFERENCES

A. AASHTO ~~Standard~~ LRFD Bridge Construction Specifications ~~for Highway Bridges~~

B~~C~~~~B~~. UDOT Quality Management Plans

1.4 DEFINITIONS Not Used

A. Not used.

1.54 SUBMITTALS

A. Lifting dDevices: Submit calculations and shop drawings for approval.

B. Precast Concrete Panels: Submit for approval samples of the specified surface texture architectural treatments exposed aggregate finish before casting the panels. Refer to the plans for the required surface texture architectural treatments.

C. Manufacturer's product data, specifications, and recommended wall installation instructions.

1.65 HANDLING, SHIPPING, AND STORAGE

A. Shipment Acceptance: Panels or posts may be accepted for shipment and marked with an orange UDOT sticker if they they meeting the following requirements:
1. They mMeet the 28 day compression test.
2. They Aare cCured and sealed according to specification.
3. They Aare nNot cracked or damaged.

B. Do not ship any panel or post that does not satisfy strength requirements.

PART 2 PRODUCTS

2.1 MATERIALS FOR PRECAST NOISE WALLS AND RETAINING WALLSCONCRETE

A. Precast Wall Panels and Posts:
1. Concrete Class AA(AE). Refer to Section 03055.
2. Type II cement.
3a. Slump requirement need not be met.
4b. 28-day minimum compressive strength of 5,000 psi.

B. Post Holes Concrete: Concrete Class B(AE). Refer to Section 03055.

2.2~~C.~~ REINFORCING STEEL~~:~~

A. Coated~~ Grade 60~~. Refer to Section 03211.

2.3~~D.~~ WELDED WIRE FABRIC~~:~~

A. Coated. Refer to Section 03211.

2.4 FORM-LINER MATERIALS

A. Use a form-liner capable of producing uniform texture and patterns, and capable of releasing the sculpted concrete surface without damage.

B. Provide solid backing and form supports ~~to ensure~~ so that the form liners remain in place during concrete placement.

C. Form Release Agent:

1. Use a manufacturer's recommended liquid-release agent that will not bond with, stain, or adversely affect precast concrete surfaces and will not impair subsequent surface or joint treatments of precast concrete.
2. Use a non-petroleum release agent meeting all EPA requirements.
3. Use a release agent not detrimental to concrete strength or durability and that does not impart color, tint, or texture to the finished product.

2.5~~E.~~ CURING COMPOUND~~:~~

A. ~~Type I, Class A.~~ Refer to Section 03390.

2.6~~F.~~ GRAVEL FOR POST HOLES~~:~~

A. Use Free Draining Granular Backfill~~ Borrow~~. ~~Follow~~ Refer to Section 0205~~61~~61.

2.7~~G.~~ ELASTOMERIC BEARING PAD~~:~~

A. ~~60 hardness.~~ As specified in AASHTO ~~Standard~~ LRFD Bridge Construction Specifications~~ for Highway Bridges, Division II~~, Article 18.2.

B. Use 60 hardness.

2.8~~H.~~ BACKER ROD~~:~~

A. Refer to Section 03152.

2.9~~I.~~ CONSTRUCTION ADHESIVE~~: Select from the Performance Data Products Listing (PDPL) maintained by the UDOT Research Division.~~

A. As recommended by the wall manufacturer.

2.10~~J.~~ WOOD SHIMS~~:~~

A. Use ~~A~~any grade fir.

~~**2.2 ADDITIONAL MATERIALS FOR RETAINING WALLS**~~

2.11~~A.~~ COMPOSITE DRAINAGE MATERIAL~~:~~

A. Two-layer composite, consisting of non-woven silt fence geotextile and matting surface that are heat bonded together.

1. Polyester non-woven fabric. ~~Follow~~ Refer to Section 01571.
2. Compression resistant matting of three-dimensional construction capable of multidirectional flow.

2.12 DRAINAGE GEOTEXTILE

A. Refer to Section 02075.

2.13~~3~~ LIFTING DEVICES

A. Use the number, type and size necessary to lift the largest precast panel used on the project.

B. Use a ~~G~~galvanized flush-type that does not project beyond the edge of the panels.

C~~B~~. Capable of lifting the maximum size of panels required ~~(11.5 ft x 7 ft x 5 inches)~~ and of tilting it~~them~~ from horizontal position to vertical position.

D~~C~~. Shear factor of safety of 2.66:1 for lifting from a flat position and a tension factor of safety of 4:1 for lifting from a vertical position.

E~~D~~. Designed for shear so that the panels can be lifted from either side.

F~~E~~. Provide a sealing cover.

~~2.4 CONCRETE POSTS~~

~~A. Cast posts in metal forms.~~

~~B. Permanently mark each post with date of casting and post the identification number supplied by the inspector. Place markings in fresh concrete in the portion of the post that will be embedded in soil.~~

~~C. Department accepts posts if they:~~
~~1. Meet the 28 day compressive strength.~~
~~2. Are cured and sealed according to specification. Refer to Section 03390 and 03392.~~
~~3. Have been visually inspected and accepted by the Engineer.~~
~~4. Have sides that do not deviate from a straight line by more than 3/8 inch per post height.~~

~~D. Replace posts that are:~~
~~1. Cracked or damaged.~~
~~2. Not permanently marked.~~

~~2.5 PRECAST CONCRETE PANELS~~

~~A. Fabricator will be pre-qualified as a supplier of pre-cast concrete products in accordance with the Quality Management Plan.~~

~~B. Cast the panels to required tolerances regarding all dimensions.~~
~~1. Cast in metal forms.~~
~~2. Do not use coloring additives.~~
~~3. Make panels match in contrast.~~

~~C. Permanently stamp panel identification number supplied by Engineer in the top surface of one lifting device prior to casting.~~

~~D. Expose the aggregate on both sides. Remove all residue from exposed surfaces.~~

~~E. Department accepts panels when they:~~
~~1. Meet the 28 day compressive strength.~~
~~2. Are cured and sealed according to specification. Refer to Section 03390 and 03392.~~

~~3. Have been visually inspected and accepted by the Engineer.~~
~~4. Have sides that do not deviate from a straight line by more than1/8 inch.~~

~~F. Replace panels that:~~
~~1. Are cracked or damaged.~~
~~2. Do not match in contrast.~~
~~3. Are not permanently marked.~~

PART 3 EXECUTION

3.1 FABRICATION

A. Use a UDOT prequalified supplier of precast concrete products in accordance with the UDOT Quality Management Plan: Precast/Prestressed Concrete Structures.

B. Concrete Posts
1. Cast posts in metal forms. Cast pilasters in metal or wood forms.
2. Permanently mark each post with the date of casting and the post identification number supplied by the inspector. Place markings in fresh concrete near the bottom of the post.
3. The Department accepts posts posts if:
   a. They meet the 28-day compressive strength.
   b. They are cured and sealed according to specification. Refer to Sections 03390 and 03392.
   c. They have been visually inspected and accepted by the Engineer.
   d. They have sides that do not deviate from a straight line by more than ~~1/8~~⅛-inch in 10 ft.
4. Replace posts that are:
   a. Cracked or damaged.
   b. Not permanently marked.

C. Precast Concrete Panels
1. Cast the panels to required tolerances regarding all dimensions.
   a. Cast in metal forms.
   b. Do not use coloring additives.
   c. Achieve uniformity of appearance, color, texture and pattern.
   d. Produce a concrete panel having smooth, solid surfaces free of voids and air pockets.
2. Permanently mark each panel with the date of casting and the panel identification number supplied by Engineer on the panel end near the top.
3. Provide the specified surface texture architectural treatment on both sides of noise panels. Provide the specified surface texture architectural

treatment on the exposed side of retaining panels. Remove all residue from panel surfaces.

a. Use a concrete form liner to achieve the specified concrete texture.

b. Provide panel faces that are free of joint marks, grain, and other obvious defects. Provide corners, including false joints, which are uniform, straight and sharp.

4. The Department accepts panels when:

a. They meet the 28 day compressive strength.

b. They are cured and sealed according to specification. Refer to Section 03390 and 03392.

c. They have been visually inspected and accepted by the Engineer.

d. They have sides that do not deviate from a straight line by more than ~~1/8~~⅛-inch in 10 ft..

5. Replace panels that:

a. Are cracked or damaged.

b. Do not match in contrast.

c. Are not permanently marked.

d. Show discoloration from release agents or curing agents.

6. Use a single full-height noise panel between posts for all noise walls. Use a single noise panel and a single retaining panel between posts for retaining/noise walls.

a. When a retaining/noise wall retains less than 3 ft of soil, the noise and retaining panels may be cast as a single panel, provided that the portion of the panel retaining soil meets all retaining panel requirements.

D.~~3.1~~ Limitations

1~~A~~. Refer to Section 03310~~03055~~ for hot and cold weather concrete limitations.

E.~~3.2~~ Curing

1~~A~~. Cure as specified in ~~Refer to~~ Section 03390.

3.2 DELIVERY, STORAGE AND HANDLING

A. Store units with adequate dunnage and bracing and protect units to prevent contact with soil, staining, and to prevent cracking, distortion, warping or other physical damage.

B. Place stored units so identification marks are clearly visible, and units can be inspected.

C. Place non-staining resilient spacers of even thickness between each unit.

D. Support units during shipment on non-staining shock absorbing material.

3.3 POST HOLES

A. Refer to SW series Standard Drawings.

B. Place edge of post holes no nearer than 2--ft from any underground utility.

~~3.4 LIFTING DEVICES~~

~~A. Place waterproof caps in the lifting devices after the panels are permanently placed.~~

3.4~~5~~ CONCRETE POSTS

A. Set true to line and grade. ~~Reject and r~~Replace posts more than ~~1/4~~¼~~2~~ inch out of plumb in 10 ft of exposed length.

B. Replace posts that do not adequately support or accept insertion of the precast panels.

C. Replace cracked or damaged posts.

D. ~~Glue~~ Attach elastomeric bearing pads to ~~the~~ concrete posts using construction adhesive. ~~for Precast Retaining/Noise Wall, f~~Follow~~ing~~ the manufacturer's recommendations.

3.5~~6~~ PRECAST CONCRETE PANEL PLACEMENT

A. Set elevations in the field for the Engineer's acceptance. Stake elevations to the bottom of the bottom panel. Align as shown on the plans.

~~B. Place the panels in the posts with the form side facing the highway.~~

3.6 LIFTING DEVICES

A. Place waterproof caps in the lifting devices after the panels are permanently placed.

3.7 RETAINING WALLS

A. Follow SW series Standard Drawings.

B. Composite drainage material:

1. Place behind the ~~wall~~ retaining panels at each weep hole location.
2. Place the fabric side of the material against the fill. Extend the length of the material from the bottom of the ~~wall~~ retaining panel to the top of the fill.
3. Attach to panels using construction adhesive. Follow manufacturer's recommendations.

C. ~~Filter Fabric~~Drainage Geotextile: Place around the back side of the posts as shown in the drawings~~plans~~. Extend the material from the bottom of the ~~wall~~ retaining panel to the top of the fill. Attach to posts using construction adhesive. Follow manufacturer's recommendations.

D. Free Draining Granular Backfill ~~Borrow~~: Place and tamp down behind the ~~wall~~ retaining panels, between the posts to the fill height and length, and at the locations shown on the plans.

3.8 CONCRETE STAINING

A. Stain concrete surfaces of posts and panels after installation is complete and as specified on the plans. Refer to Section 09981.

B. Stain concrete surfaces to 6 inches below the finished ground line.

END OF SECTION

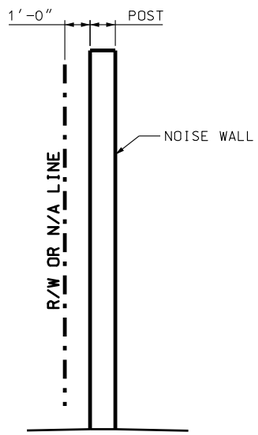

SECTION

ADJACENT TO R/W OR N/A LINE

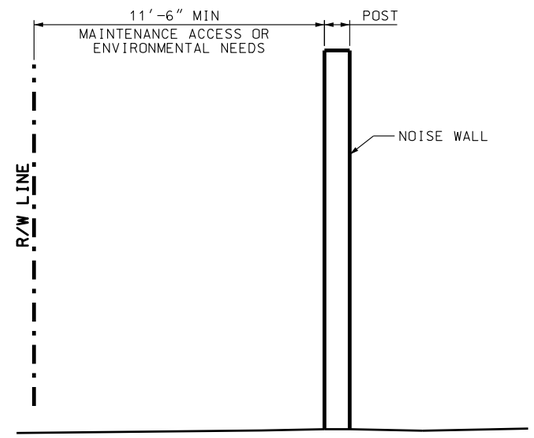

SECTION

ADJACENT TO R/W

(WITH MAINTENANCE ACCESS)

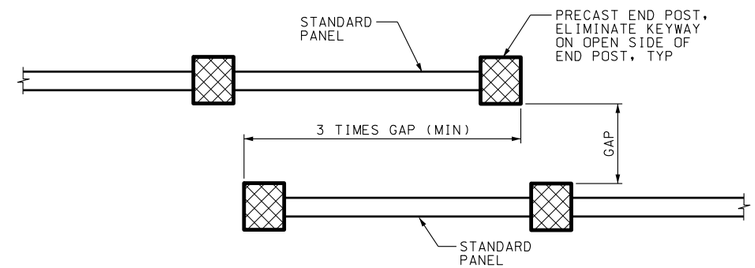

PLAN

WALL OVERLAP

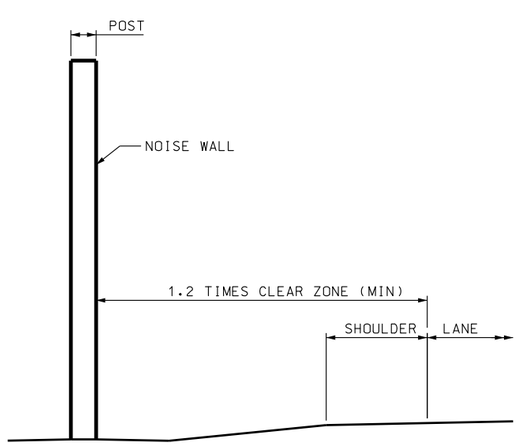

SECTION

ADJACENT TO ROADWAY

(WITHOUT BARRIER)

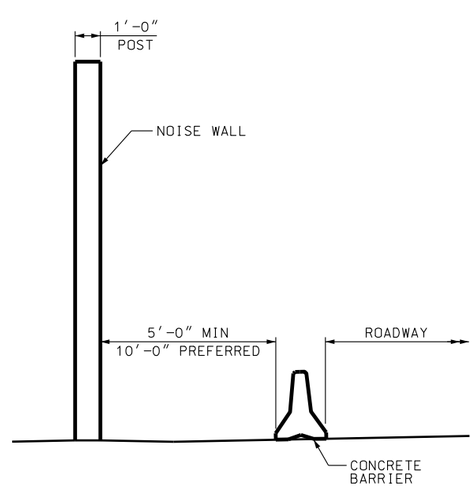

SECTION

ADJACENT TO ROADWAY

(WITH BARRIER)

GENERAL NOTES

1. SLOPE FINISHED GRADE TO DRAIN AWAY FROM WALL.
2. PROVIDE MAINTENANCE ACCESS BETWEEN NOISE WALL AND R/W LINE WHEN NOISE WALL IS NOT PLACED 1'-0" INSIDE OF R/W LINE.
3. CONNECT R/W FENCE TO BOTH ENDS OF WALL WHEN PLACING NOISE WALL 1'-0" INSIDE OF R/W OR N/A LINE.
4. DO NOT PLACE WALL OUTSIDE OF N/A LINE.
5. OVERLAP NOISE WALL AS SHOWN WHEN AN OPENING IS REQUIRED. SEE PLANS FOR END TREATMENT.

REVISIONS

NO	DATE	APPR	REMARKS

UTAH DEPARTMENT OF TRANSPORTATION
STANDARD DRAWINGS FOR ROAD AND BRIDGE CONSTRUCTION
SALT LAKE CITY, UTAH

RECOMMENDED FOR APPROVAL — JAN.01.2005 DATE
CHAIRMAN STANDARDS COMMITTEE APPROVED — JAN.01.2005 DATE
DEPUTY DIRECTOR

NOISE WALL
PLACEMENT OPTIONS
1 OF 1

STANDARD DRAWING TITLE

STD DWG
SW 2

DGN File: G:\StandardsandSpecsSection\Standards Committee\MeetingFiles\2007\4-August30,07\Hwy\Drawings\SW02.dgn
15-AUG-2007

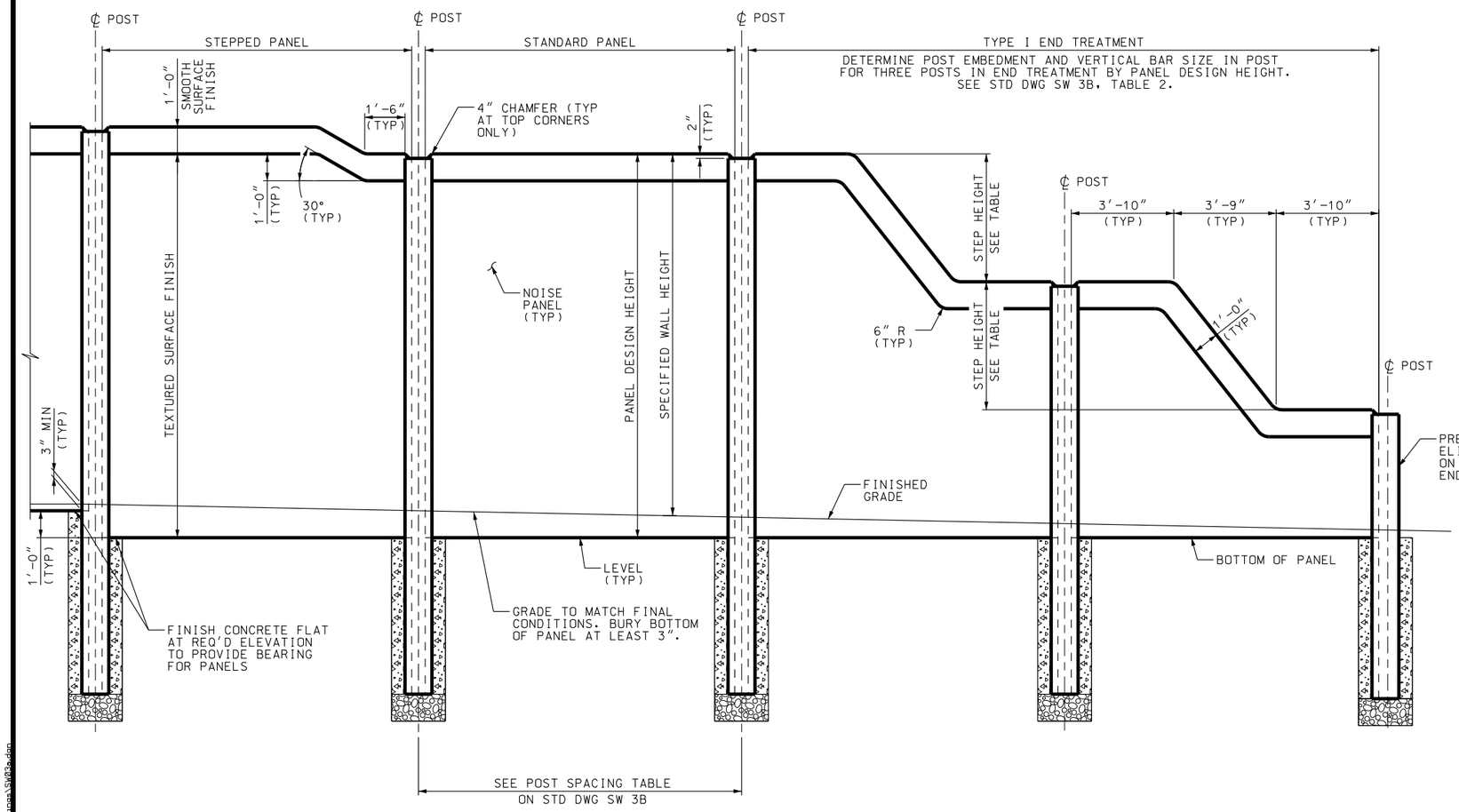

TYPICAL ELEVATION

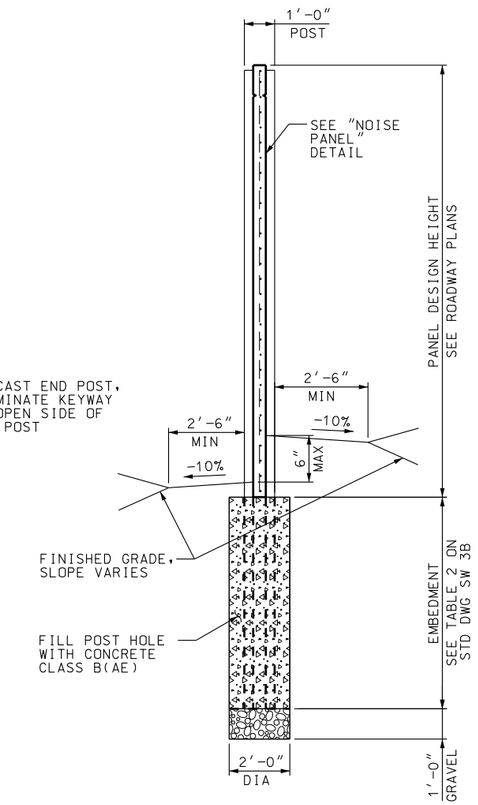

TYPICAL SECTION

DESIGN DATA

AASHTO GUIDE SPECIFICATIONS FOR STRUCTURAL DESIGN OF SOUND BARRIERS, 1989, WITH INTERIMS TO 2002.

AASHTO STANDARD SPECIFICATIONS FOR HIGHWAY BRIDGES, 2002.

PRECAST PANELS & POSTS: CONCRETE CLASS AA(AE) f′c= 5,000 psi;
Fs(REINF)=24,000 psi; n=8

POST HOLES: CONCRETE CLASS B f′c= 2,500 psi

GENERAL NOTES

1. CHAMFER EXPOSED CONCRETE CORNERS AS SHOWN.
2. SEE ROADWAY PLANS FOR LOCATION AND SPECIFIED HEIGHT OF PRECAST NOISE WALL.
3. ALL NOISE PANELS ARE:
   HEIGHT: 8′ MIN TO 17′ MAX (1′ INCREMENTS)
   LENGTH: 11′-5″ LONG
   THICKNESS: 7″
4. DETERMINE PANEL HEIGHTS AND LOCATIONS OF PANEL STEPS TO PROVIDE SPECIFIED MINIMUM WALL HEIGHT THROUGHOUT ENTIRE LENGTH OF WALL, EXCLUDING END TREATMENTS.
5. CHANGE ELEVATION AT TOP OF NOISE WALL WITH STEPPED PANEL AS SHOWN ON THIS SHEET.
6. BEGIN AND END NOISE WALL WITH END TREATMENT SPECIFIED ON THE PLANS. TYPE I END TREATMENT SHOWN ON THIS SHEET.
7. EVENLY SPACE PILASTER POSTS AT 200 FT MAXIMUM INTERVAL WHEN REQ'D. SEE STD DWG SW 5 FOR PRECAST PILASTER POST DETAILS. SEE ROADWAY PLANS FOR EXACT LOCATIONS.
8. FORM A TEXTURED SURFACE FINISH ON BOTH SIDES OF NOISE PANEL. SEE ROADWAY PLANS FOR PRESCRIBED TEXTURED SURFACE FINISHES.

TABLE 1

PANEL DESIGN HEIGHT	PANEL REINFORCING
6′ AND LESS	WWF 6x6 - W10xW10
7′	WWF 6x6 - W10xW10
8′	WWF 6x6 - W10xW10
9′	WWF 6x6 - W10xW10
10′	WWF 6x6 - W10xW10
11′	WWF 6x6 - W10xW10
12′	WWF 6x6 - W10xW10
13′	WWF 6x6 - W20xW20
14′	WWF 6x6 - W20xW20
15′	WWF 6x6 - W20xW20
16′	WWF 6x6 - W20xW20
17′	WWF 6x6 - W20xW20

TYPE I END TREATMENT DIMENSIONS

NOISE PANEL DESIGN HEIGHT	STEP HEIGHT	NUMBER OF STEPS
7′ AND LESS	NONE	NONE
8′	3′-0″	1
9′	4′-0″	1
10′	4′-0″	1
11′	5′-0″	1
12′	3′-6″	2
13′	4′-0″	2
14′	4′-6″	2
15′	4′-6″	2
16′	5′-0″	2
17′	5′-6″	2

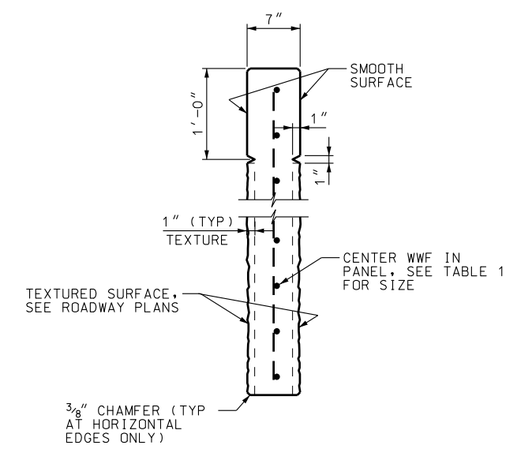

NOISE PANEL

NO	DATE	APPR	REMARKS

REVISIONS

UTAH DEPARTMENT OF TRANSPORTATION
STANDARD DRAWINGS FOR ROAD AND BRIDGE CONSTRUCTION
SALT LAKE CITY, UTAH

RECOMMENDED FOR APPROVAL — DATE JAN.01.2005
CHAIRMAN STANDARDS COMMITTEE APPROVED — DATE JAN.01.2005
DEPUTY DIRECTOR

PRECAST CONCRETE NOISE WALL 1 OF 2

STANDARD DRAWING TITLE

STD DWG
SW 3A

DGN File(s):Standards\SpecSections\Standards Committee\MeetingFiles\20071.4\dgns\38.07\ks\Drawings\SW3a.dgn
15-AUG-2007

POST SPACING

℄ POST TO ℄ POST		REQ'D SPACING
TYPE I	TO TYPE I	12'-0"
TYPE I	TO TYPE II	12'-2"
TYPE I	TO TYPE III SIDE A	12'-0"
TYPE I	TO TYPE III SIDE B	12'-4"
TYPE II	TO TYPE II	12'-4"
TYPE II	TO TYPE III SIDE A	12'-4"
TYPE II	TO TYPE III SIDE B	12'-6"
TYPE III SIDE A	TO TYPE III SIDE A	12'-0"
TYPE III SIDE A	TO TYPE III SIDE B	12'-4"
TYPE III SIDE B	TO TYPE III SIDE B	12'-8"

PILASTER POST IS TYPE I

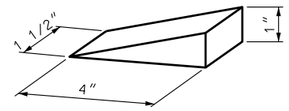

WOOD SHIM DETAIL

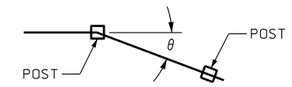

θ DETAIL

TABLE 2

PANEL DESIGN HEIGHT	POST	
	VERTICAL BAR SIZE	EMBEDMENT
6' OR LESS	#5	3'-0"
7'	#5	3'-6"
8'	#5	4'-0"
9'	#5	4'-6"
10'	#5	5'-0"
11'	#6	5'-6"
12'	#6	6'-0"
13'	#7	6'-6"
14'	#7	7'-0"
15'	#8	7'-6"
16'	#9	8'-0"
17'	#9	8'-6"

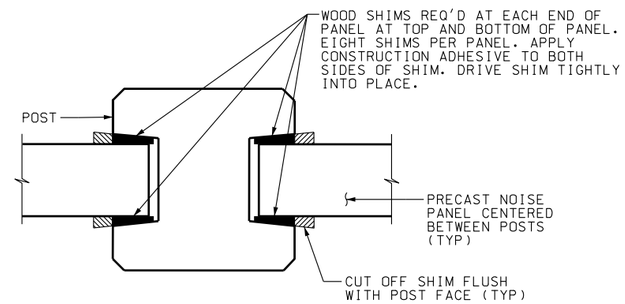

POST & NOISE PANEL DETAIL

TYPE I POST SHOWN
TYPE II AND III POSTS SIMILAR
PILASTER SIMILAR

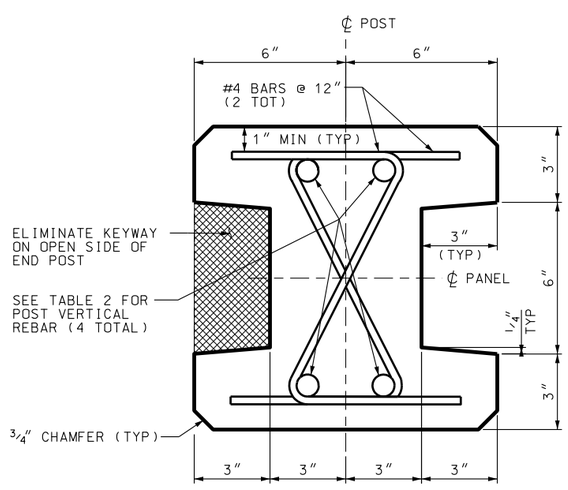

SECTION THRU TYPE I POST

θ = 0° TO 10°

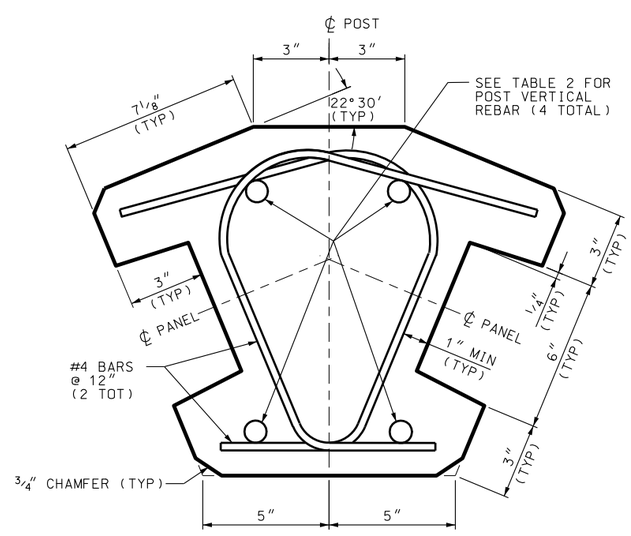

SECTION THRU TYPE II POST

θ = 35° TO 55°

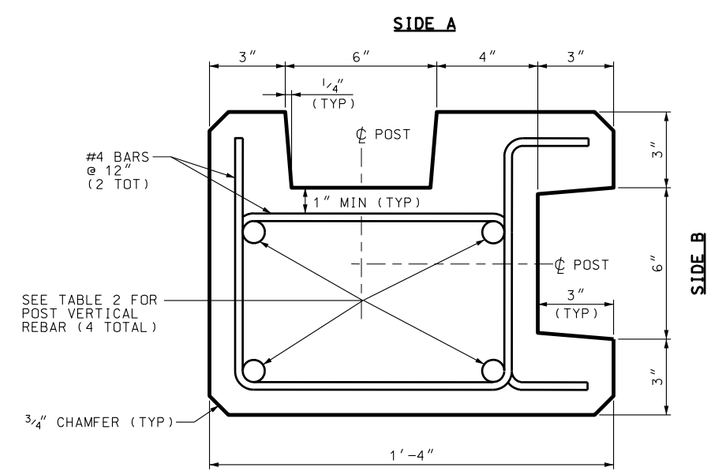

SECTION THRU TYPE III POST

θ = 80° TO 100°

REVISIONS

NO.	DATE	APPR.	REMARKS

UTAH DEPARTMENT OF TRANSPORTATION
STANDARD DRAWINGS FOR ROAD AND BRIDGE CONSTRUCTION
SALT LAKE CITY, UTAH

RECOMMENDED FOR APPROVAL — JAN.01.2005 DATE
CHAIRMAN STANDARD DRAWINGS COMMITTEE
APPROVED — JAN.01.2005 DATE
DEPUTY DIRECTOR

PRECAST CONCRETE NOISE WALL 2 OF 2

STANDARD DRAWING TITLE

STD DWG
SW 3B

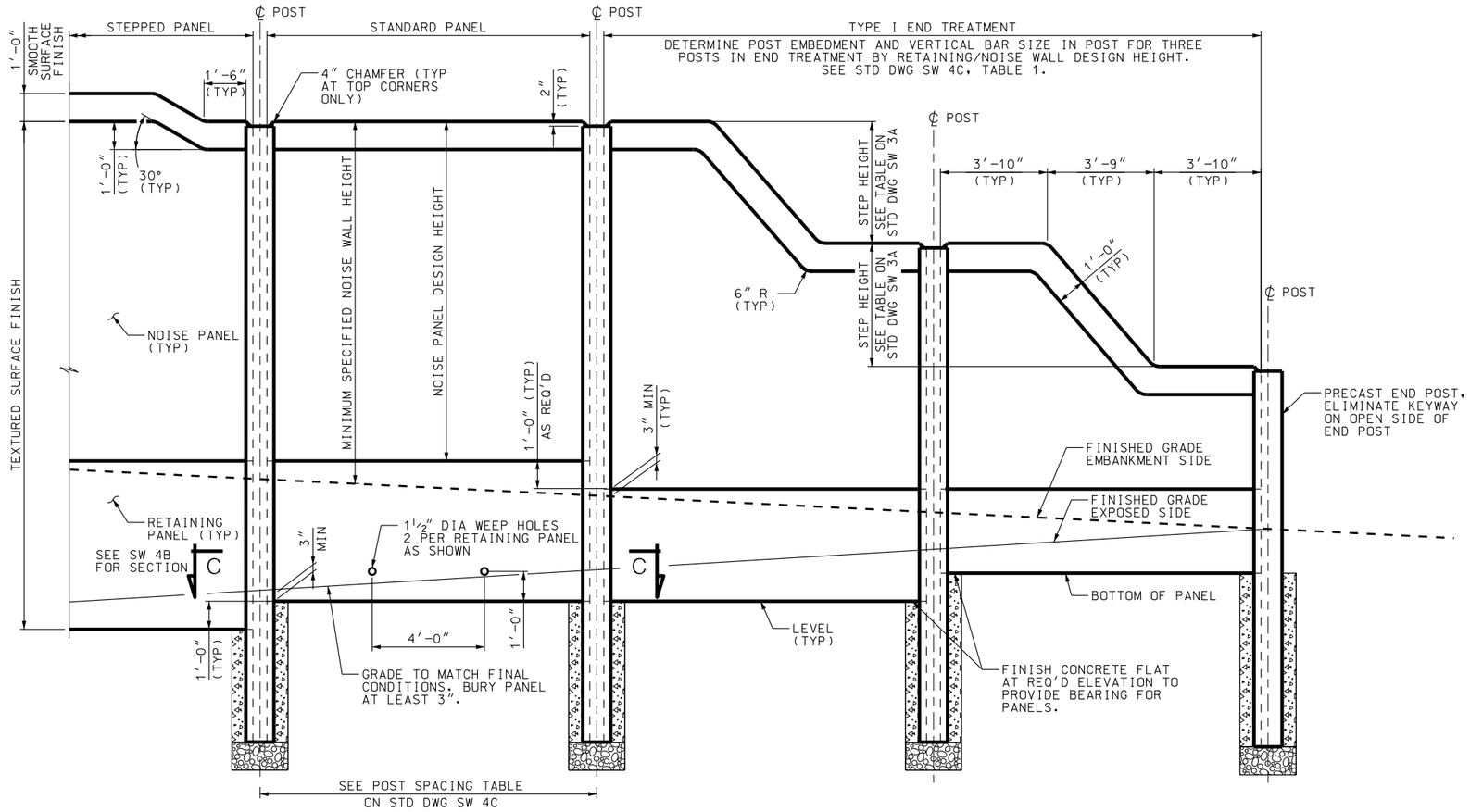

TYPICAL ELEVATION

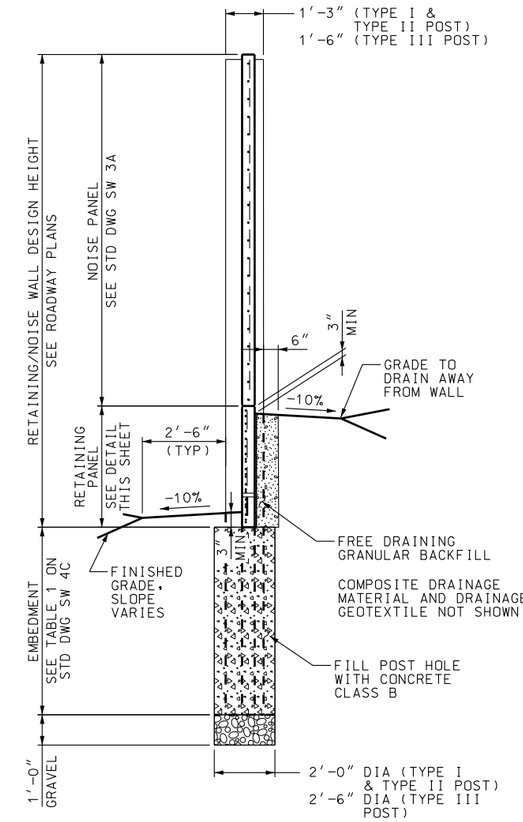

TYPICAL SECTION

DESIGN DATA

AASHTO GUIDE SPECIFICATIONS FOR STRUCTURAL DESIGN OF SOUND BARRIERS, 1989, WITH INTERIMS TO 2002.

AASHTO STANDARD SPECIFICATIONS FOR HIGHWAY BRIDGES, 2002.

PRECAST PANELS & POSTS: CONCRETE CLASS AA(AE) f'c= 5,000 psi; Fs(REINF)=24,000 psi; n=8

POST HOLES: CONCRETE CLASS B f'c= 2,500 psi

GENERAL NOTES

1. CHAMFER EXPOSED CONCRETE CORNERS AS SHOWN.
2. SEE ROADWAY PLANS FOR LOCATION AND HEIGHT OF PRECAST RETAINING/NOISE WALL.
3. PROVIDE MINIMUM SPECIFIED NOISE WALL HEIGHT THROUGHOUT ENTIRE WALL LENGTH, EXCLUDING END TREATMENT.
4. ALL PANELS ARE:

	RETAINING PANEL	TRANSITION PANEL
HEIGHT:	7' MAX (1' INCREMENTS)	11' MAX (1' INCREMENTS)
LENGTH:	11'-5" LONG	11'-5" LONG
THICKNESS:	6"	7"

5. SEE STD DWG 4B FOR RETAINING PANEL DETAILS.
6. MAXIMUM HEIGHT OF RETAINING/NOISE WALL IS 19'-0".
7. SEE STD DWG 3A FOR NOISE PANEL DETAILS.
8. CHANGE ELEVATION AT TOP OF RETAINING/NOISE WALL WITH STEPPED NOISE PANEL SHOWN ON THIS SHEET.
9. BEGIN AND END RETAINING/NOISE WALL WITH END TREATMENT SPECIFIED ON THE PLANS. TYPE I END TREATMENT SHOWN ON THIS SHEET.
10. EVENLY SPACE PILASTER POSTS AT 200 FT MAXIMUM INTERVALS WHEN REQ'D. SEE STD DWG SW 5 FOR PRECAST PILASTER POST DETAILS. SEE ROADWAY PLANS FOR EXACT LOCATIONS.
11. FORM A TEXTURED SURFACE FINISH ON EXPOSED SIDE OF RETAINING PANEL. SEE ROADWAY PLANS FOR PRESCRIBED TEXTURED SURFACE FINISH.

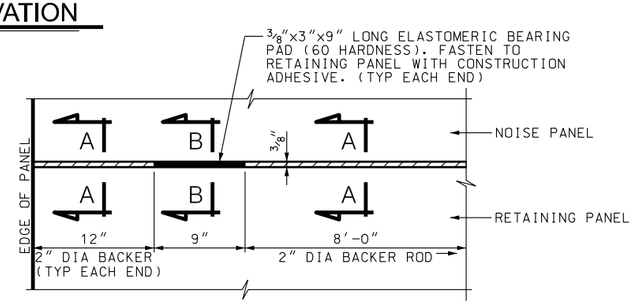

PANEL CONNECTION DETAIL

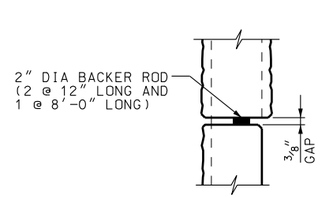

SECTION A-A

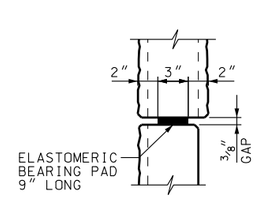

SECTION B-B

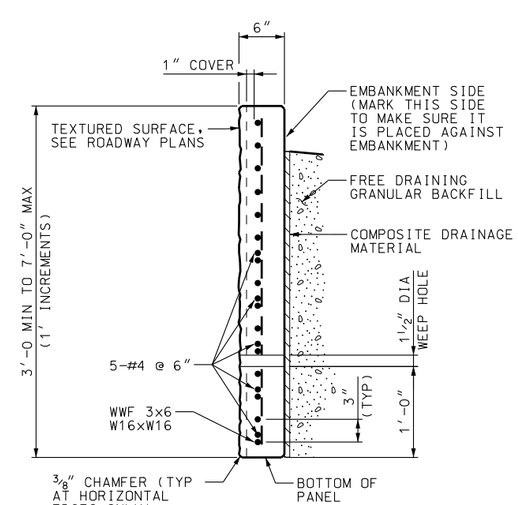

RETAINING PANEL

NO	DATE	APPR	REMARKS

REVISIONS

UTAH DEPARTMENT OF TRANSPORTATION
STANDARD DRAWINGS FOR ROADWAY BRIDGE CONSTRUCTION
SALT LAKE CITY, UTAH

RECOMMENDED FOR APPROVAL — JAN.01.2005 DATE
CHAIRMAN STANDARDS COMMITTEE APPROVED — JAN.01.2005 DATE
DEPUTY DIRECTOR

PRECAST CONCRETE RETAINING/NOISE WALL 1 OF 3

STANDARD DRAWING TITLE

STD DWG SW 4A

DGN: E:\pw_f:\Standards\Bridge\Sections\Standards Committee\Working Files\2007\Advance\20_07\Wed\Drawings\SW4a.dgn
15-JUL-2007

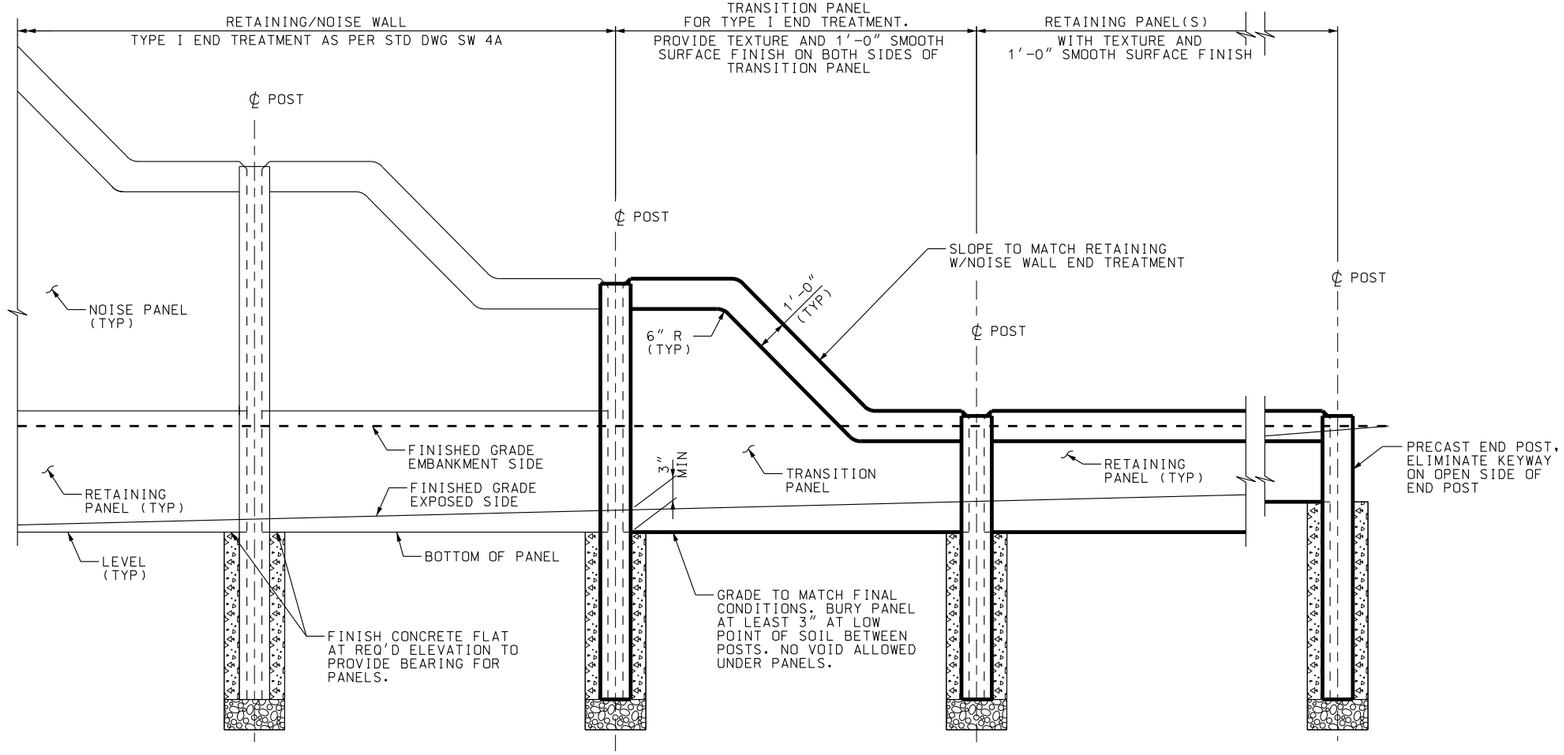

TYPICAL ELEVATION

TRANSITION TO RETAINING ONLY WALL

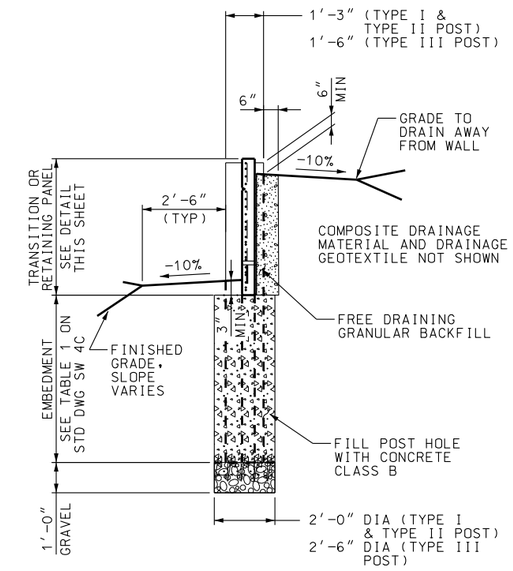

TYPICAL SECTION

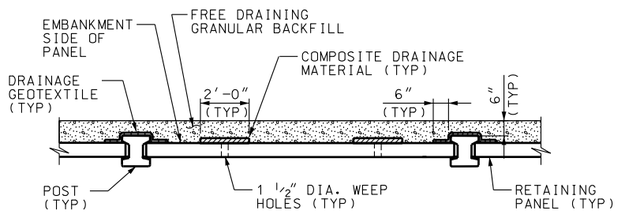

NOTE: PLACE FREE DRAINING GRANULAR BACKFILL, COMPOSITE DRAINAGE MATERIAL, AND DRAINAGE GEOTEXTILE FROM THE TOP OF FINISHED GRADE TO THE BOTTOM OF RETAINING PANEL.

SECTION C-C

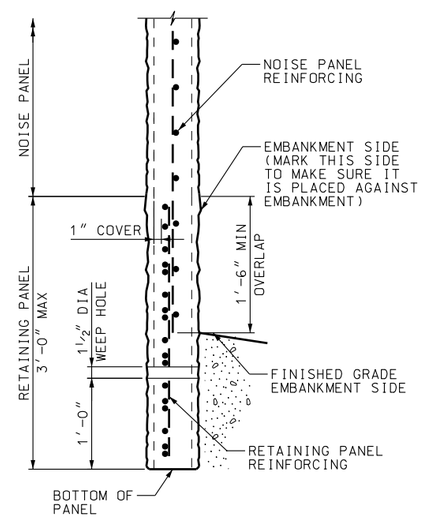

COMBINED NOISE/RETAINING PANEL

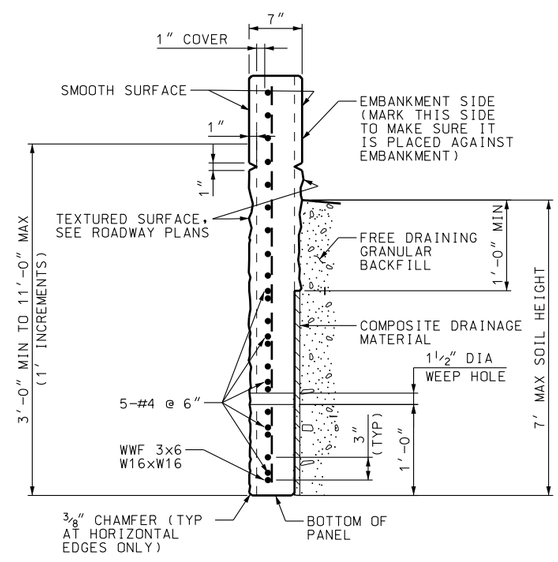

TRANSITION PANEL

NO	DATE	APPR	REMARKS

REVISIONS

UTAH DEPARTMENT OF TRANSPORTATION
STANDARD DRAWINGS FOR ROAD AND BRIDGE CONSTRUCTION
SALT LAKE CITY, UTAH

RECOMMENDED FOR APPROVAL — JAN.01.2005 DATE
CHAIRMAN STANDARDS & TECHNICAL COMMITTEE APPROVED — JAN.01.2005 DATE
DEPUTY DIRECTOR

PRECAST CONCRETE RETAINING/NOISE WALL 2 OF 3

STANDARD DRAWING TITLE

STD DWG
SW 4B

POST SPACING		
℄ POST TO ℄ POST		REQ'D SPACING
TYPE I	TO TYPE I	12'-0"
TYPE I	TO TYPE II	12'-2"
TYPE I	TO TYPE III	12'-3"
TYPE II	TO TYPE II	12'-4"
TYPE II	TO TYPE III	12'-5"

PILASTER POST IS TYPE I

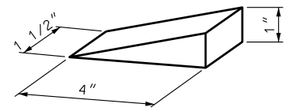

WOOD SHIM DETAIL

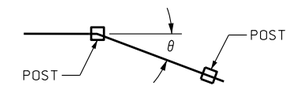

θ DETAIL

TABLE 1		
RETAINING/ NOISE WALL HEIGHT	POST	
	VERTICAL BAR SIZE	EMBEDMENT
7' OR LESS	#7	4'-8"
8'	#7	6'-8"
9'	#7	6'-8"
10'	#7	6'-8"
11'	#7	7'-4"
12'	#7	8'-0"
13'	#7	8'-8"
14'	#8	9'-4"
15'	#8	10'-0"
16'	#8	10'-8"
17'	#9	11'-4"
18'	#9	12'-0"
19'	#9	12'-8"

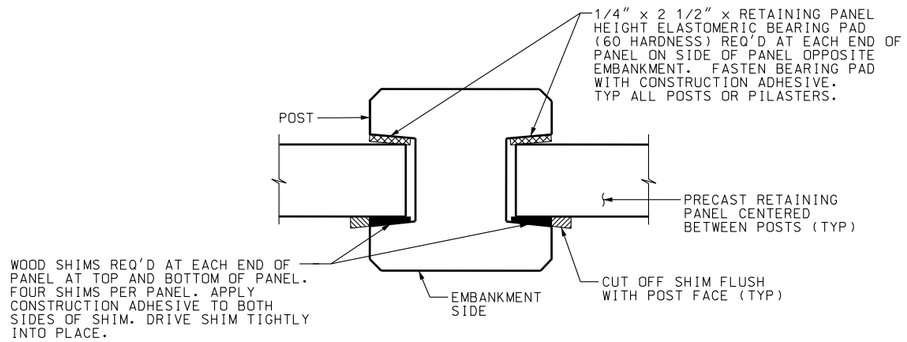

POST & RETAINING PANEL DETAIL

TYPE I POST SHOWN
TYPE II AND III POSTS SIMILAR
PILASTER SIMILAR

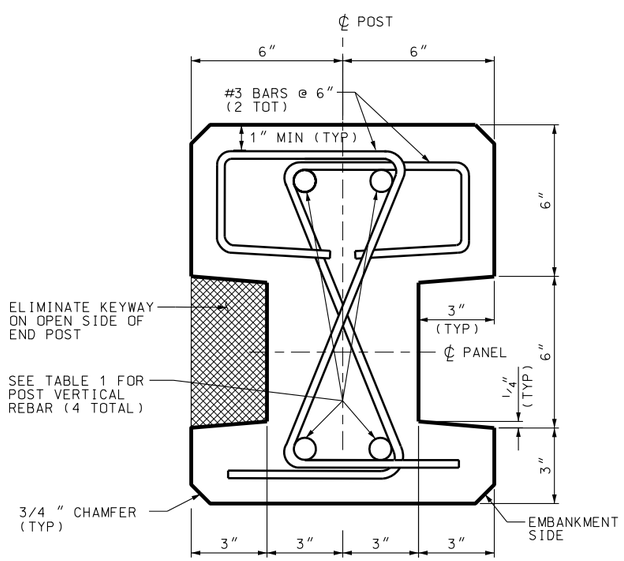

SECTION THRU TYPE I POST

θ = 0° TO 10°

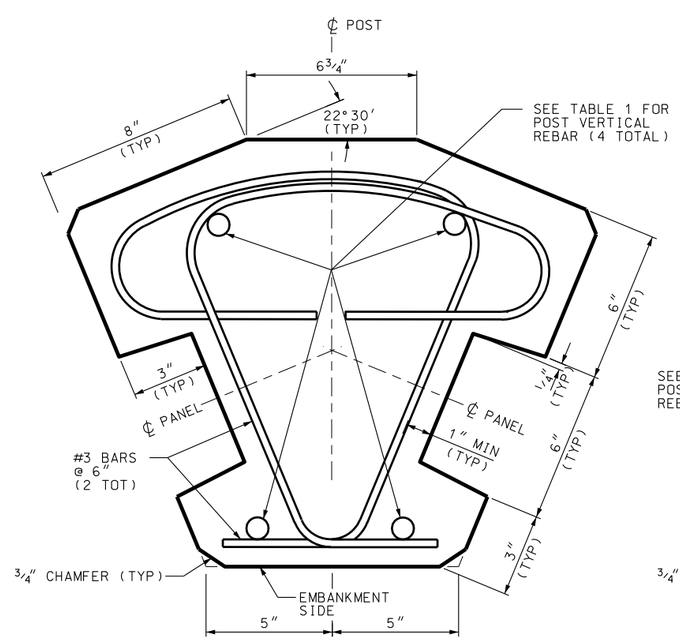

SECTION THRU TYPE II POST

θ = 35° TO 55°

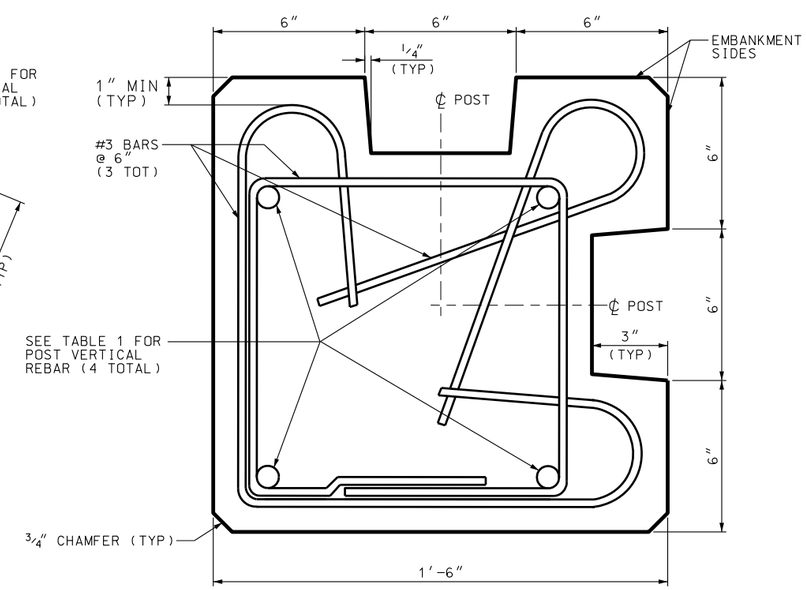

SECTION THRU TYPE III POST

θ = 80° TO 100°

REVISIONS

NO	DATE	APPR	REMARKS
1	02/23/06 B.A.		CORRECTED PAD HARDNESS IN POST/PANEL DETAIL.

UTAH DEPARTMENT OF TRANSPORTATION
STANDARD DRAWINGS FOR ROAD AND BRIDGE CONSTRUCTION
SALT LAKE CITY, UTAH

RECOMMENDED FOR APPROVAL — FEB.23,2006 DATE
CHAIRMAN STANDARDS COMMITTEE APPROVED — FEB.23,2006 DATE
DEPUTY DIRECTOR

PRECAST CONCRETE RETAINING/NOISE WALL 3 OF 3

STANDARD DRAWING TITLE

STD DWG
SW 4C

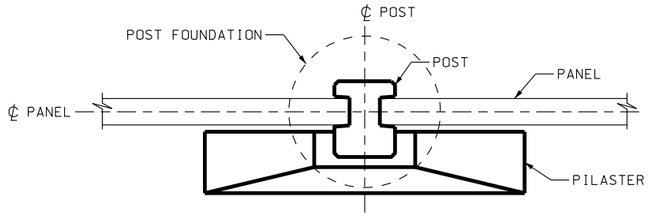

PLAN

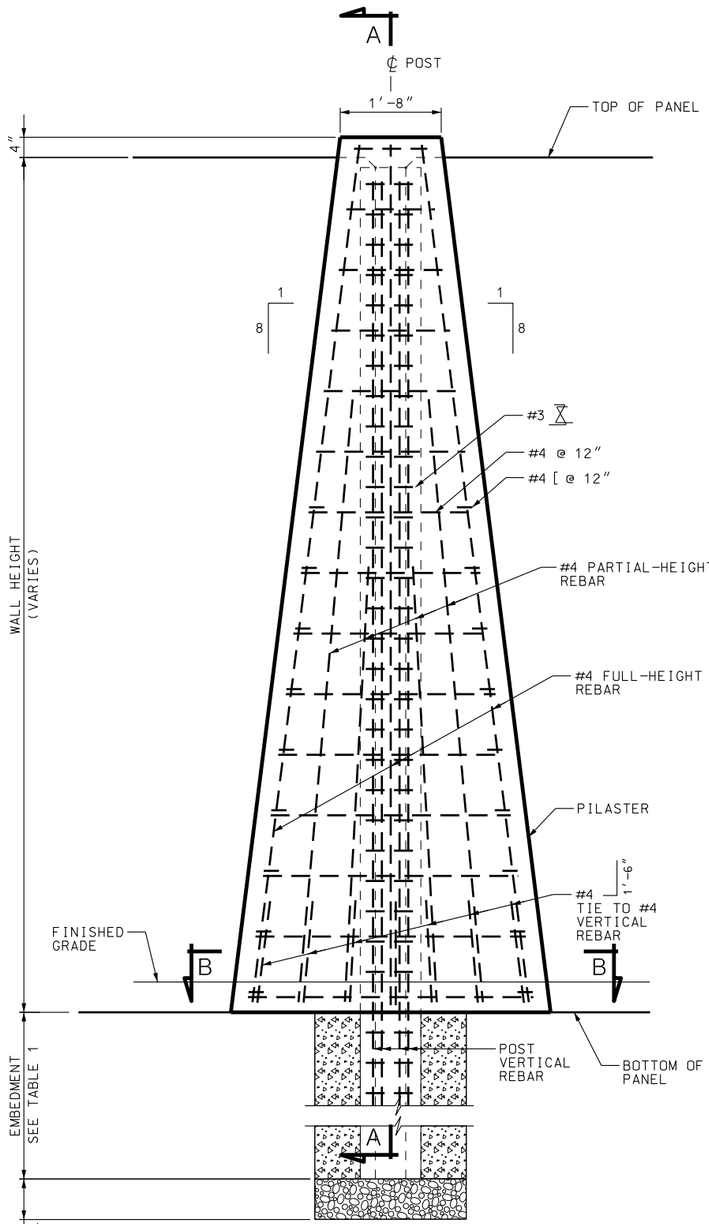

ELEVATION

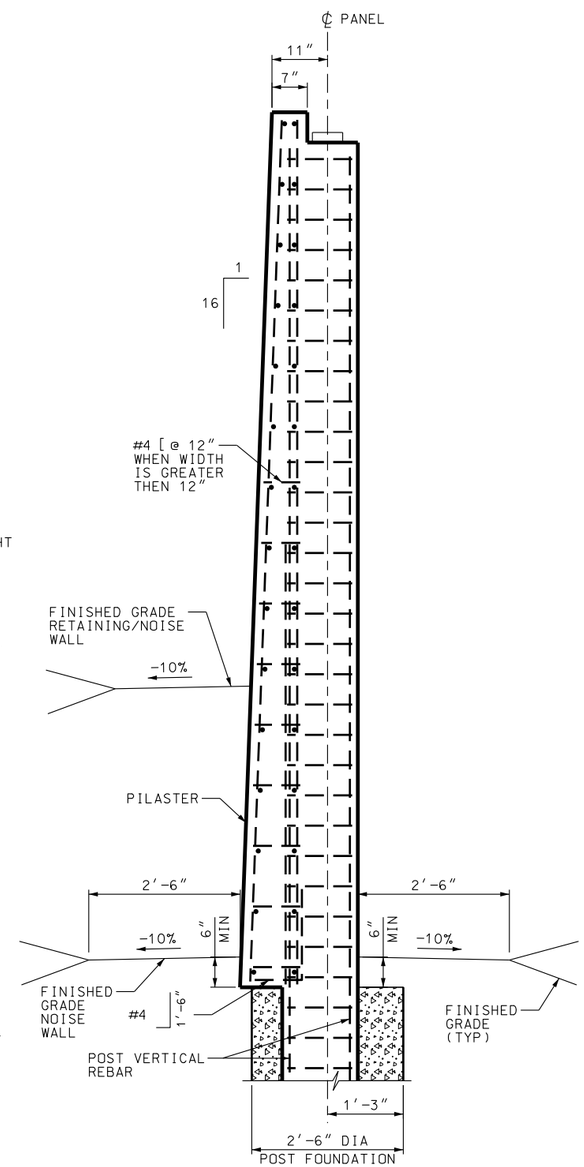

SECTION A-A

DESIGN DATA

AASHTO GUIDE SPECIFICATIONS FOR STRUCTURAL DESIGN OF SOUND BARRIERS, 1989, WITH INTERIMS TO 2002.

AASHTO STANDARD SPECIFICATIONS FOR HIGHWAY BRIDGES, 2002.

PILASTER POST: CONCRETE CLASS AA(AE) f′c= 5,000 psi

POST HOLES: CONCRETE CLASS B f′c= 2,500 psi

GENERAL NOTES

1. CHAMFER ALL EXPOSED CONCRETE CORNERS ¾″ EXCEPT WHERE SPECIFIED OTHERWISE.
2. PROVIDE 2″ CONCRETE COVER TO REINFORCING STEEL EXCEPT WHERE SPECIFIED OTHERWISE.
3. ALL EXPOSED SURFACES TO HAVE A SMOOTH SURFACE FINISH.
4. DO NOT PLACE PILASTERS ON WALLS GREATER THAN 19′ HIGH.
5. EVENLY SPACE PILASTER POSTS AT 200 FT MAXIMUM INTERVALS. SEE ROADWAY PLANS FOR EXACT LOCATIONS.
6. PLACE PILASTER ON HIGHWAY SIDE OF NOISE WALLS.
7. PLACE PILASTER ON HIGHWAY SIDE OF RETAINING/NOISE WALLS.
8. WHEN PILASTER IS ON EMBANKMENT SIDE OF RETAINING/NOISE WALLS, PLACE 1′-0 WIDE DRAINAGE GEOTEXTILE ALONG JOINT BETWEEN PILASTER AND PANEL (2 LOCATIONS PER PILASTER) FROM THE TOP OF FINISHED GRADE TO THE BOTTOM OF RETAINING PANEL. WRAP FREE DRAINING GRANULAR BACKFILL AROUND PILASTER.

TABLE 1

WALL HEIGHT	POST	
	VERTICAL BAR SIZE	EMBEDMENT
6′ AND LESS	#5	5′-6″
7′	#5	6′-4″
8′	#5	7′-3″
9′	#5	8′-2″
10′	#7	9′-0″
11′	#7	9′-11″
12′	#8	10′-10″
13′	#8	11′-9″
14′	#8	12′-8″
15′	#10	13′-6″
16′	#10	14′-5″
17′	#10	15′-4″
18′	#11	16′-3″
19′	#11	17′-2″

EMBEDMENT = 0.9 X WALL HEIGHT

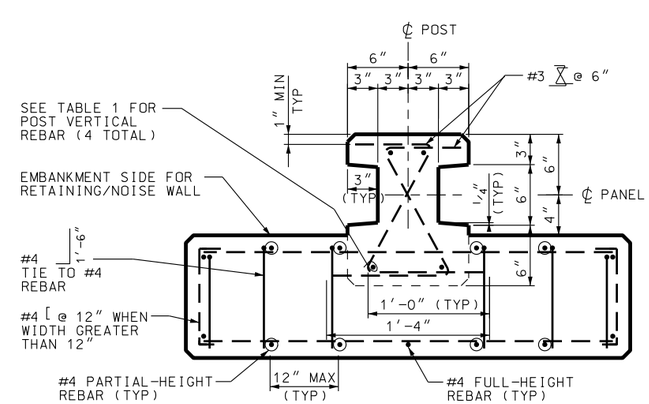

SECTION B-B

REVISIONS				
DATE	APPR	REMARKS		

UTAH DEPARTMENT OF TRANSPORTATION
STANDARD DRAWINGS FOR ROAD AND BRIDGE CONSTRUCTION
SALT LAKE CITY, UTAH

RECOMMENDED FOR APPROVAL — JAN.01.2005 DATE
CHAIRMAN STANDARDS COMMITTEE APPROVED — JAN.01.2005 DATE
DEPUTY DIRECTOR

PRECAST PILASTER POST 1 OF 1
STANDARD DRAWING TITLE

STD DWG
SW 5

ASHLAR STONE

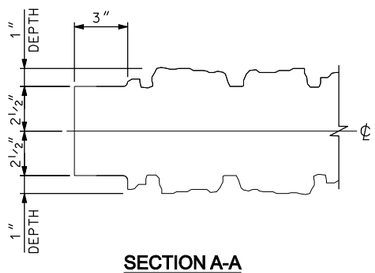

SECTION A-A

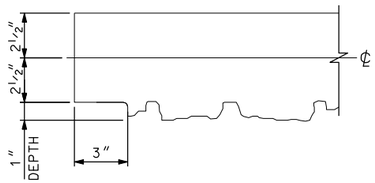

SECTION B-B

EXPOSED AGGREGATE

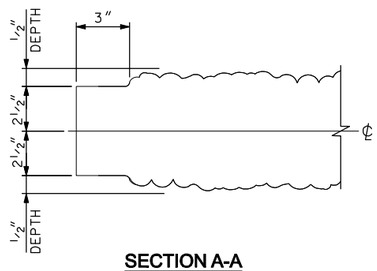

SECTION A-A

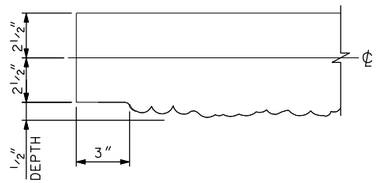

SECTION B-B

FRACTURED FIN

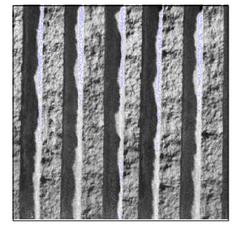

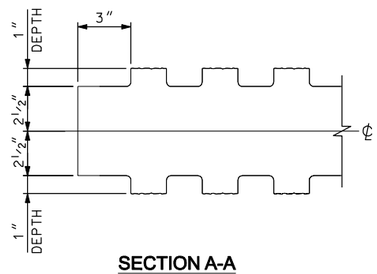

SECTION A-A

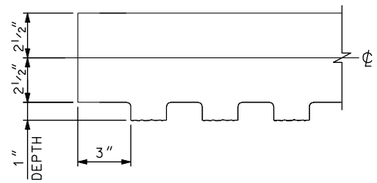

SECTION B-B

RIVER ROCK

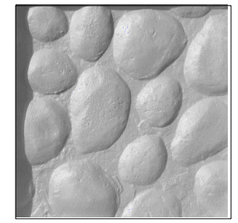

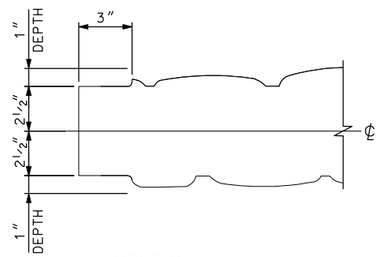

SECTION A-A

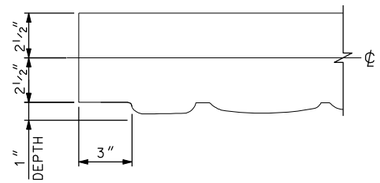

SECTION B-B

STACKED STONE

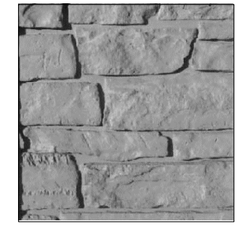

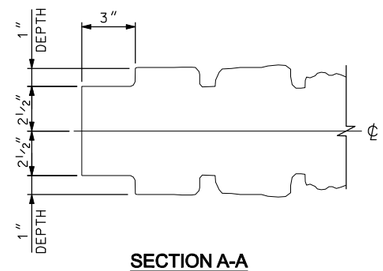

SECTION A-A

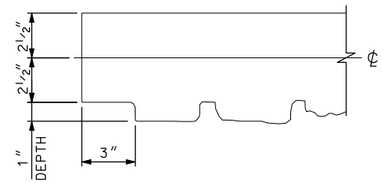

SECTION B-B

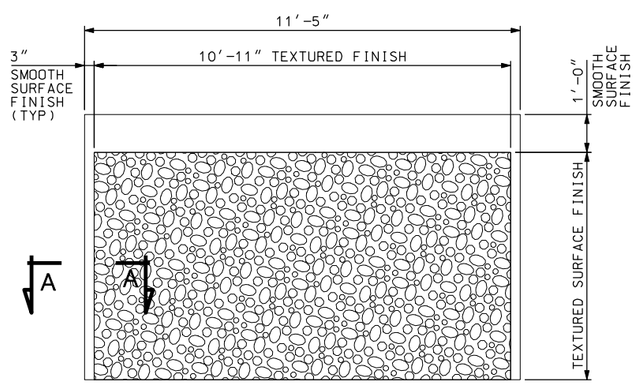

TYPICAL NOISE PANEL

BOTH FACES SIMILAR

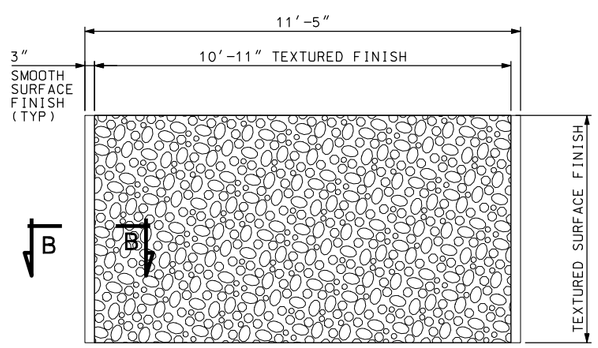

TYPICAL RETAINING PANEL

EMBANKMENT SIDE FACE SMOOTH SURFACE FINISH

GENERAL NOTES

1. SEE STD DWG SW 3A FOR ADDITIONAL NOISE PANEL DETAILS.
2. SEE STD DWG SW 4A AND 4B FOR ADDITIONAL RETAINING PANEL DETAILS.
3. FORM TEXTURED SURFACE FINISH USING FORM LINERS.
4. PROVIDE A TEXTURED SURFACE FINISH ON BOTH SIDES OF NOISE PANELS.
5. PROVIDE A SMOOTH SURFACE FINISH ON THE EMBANKMENT SIDE AND A TEXTURED SURFACE FINISH ON THE EXPOSED SIDE OF RETAINING PANELS.
6. USE THE EXPOSED AGGREGATE OPTION TO MATCH AN EXISTING EXPOSED AGGREGATE NOISE WALL.
7. SUBMIT FOR APPROVAL SAMPLES OF THE TEXTURED SURFACE FINISHES SPECIFIED ON THE ROADWAY PLANS AND SPECIAL PROVISIONS PRIOR TO CASTING THE PANELS.

REVISIONS

NO.	DATE	APPR.	REMARKS

UTAH DEPARTMENT OF TRANSPORTATION
STANDARD DRAWINGS FOR ROAD AND BRIDGE CONSTRUCTION
SALT LAKE CITY, UTAH

RECOMMENDED FOR APPROVAL _____ DATE

CHAIRMAN STANDARDS COMMITTEE APPROVED _____ DATE

DEPUTY DIRECTOR _____ DATE

PRECAST CONCRETE PANEL SURFACE TEXTURE OPTIONS

STANDARD DRAWING TITLE

STD. DWG. NO.
SW 6

DGN File:C:\Documents and Settings\rpeterso\Desktop\sw06-textures.dgn
15-AUG-2007

Standards Committee Submittal Sheet

Name of preparer: *Wes Starkenburg*
Title/Position of preparer: *Operations Design Engineer*
Specification/Drawing/Item Title: *School Speed Limit Assembly (SN 2),*
Overhead School Sped Limit Assembly (SN3),
Typical Pavement Markings, ST 3A,B,C,D
Specification/Drawing Number: *SN 2. SN3, ST 3A, ST 3B, ST 3C, ST 3D*

Enter appropriate priority level:
(See last page for explanation) **3**

Sheet not required on editorial or minor changes to standards. Check with Standards Section.

NOTES:

1. All Submittal Sheets must be completed and sent to the Standards and Specifications Section by the Standards Committee suspense date as shown on the Web. (http://www.udot.utah.gov/index.php/m=c/tid=303)
2. The Preparer of the Submittal Sheet or the Standards Committee member (or authorized substitute) responsible for the submittal must be present at the Standards Committee meeting and capable of discussing and answering all questions related to the submittal. The item will be postponed to a later meeting if one of these people is not present.
3. Notify the Standards and Specifications Section immediately of any changes that impact the presentation to include absence of sponsor or delay in presentation.

Complete the following: (Use additional pages as needed.)

A. Why? Detail the reason for changing the Standard (Specification or Drawing), what has initiated a new Standard, or what has caused a new or changed item of interest.

Overall review of standards for 2008 Standard Drawings book, has revealed a number of items that should be corrected or improved upon.

B. How is Measurement and Payment handled? Existing (from the measurement and payment document), modified, or new measurement and payment to be included with all Standard Specifications or Supplemental Specifications.

There is no proposed change to measurements and payment.

C. Stakeholder Notification for AGC and ACEC:

By email provide the AGC and ACEC Standards Committee member a copy of all pertinent information relating to the specification or drawing. Detail all responses below. Indicate if no comments were received.

Note: There is a two-week response time set for this item.

Refer to the Standards Committee Web site, Members page at http://www.udot.utah.gov/index.php/m=c/tid=659 for the respective e-mail addresses.

AGC Comments: (Use as much space as necessary.)

AGC indicates drawings are OK as is.

ACEC Comments: (Use as much space as necessary.)

ST 3A

Label edge of pavement. *No, Is shown on DD Drwgs*

"Lane Reduction Transition"

Provide second transitions to shift the continued lane. Both transitions cannot happen at once. *Will evaluate and change.*

Right side broken line needs to match other broken lines on sheet. *Will match.*

Sign shown is old sign. *Will update.*

Show updated advanced placement distance

ST 3B

Delete note 2. *No need to delete.*

Note 4 refers to a dotted line that is not used. *Will clarify.*

Label edge of pavement. *No, Is shown on DD Drwgs*

Place all design information (not needed for striping) on DD drawings, e.g. "Terminate ramp control line…". *Will evaluate and do.*

"Entrance Ramp"

Add Tapered to title to read Tapered Entrance Ramp. *Will do.*

Add broken line (to ramp left shoulder) starting at 10 ft offset. *Will do.*

Start 700' dimension at the painted nose. *Will do.*
AASHTO shows transition form 700 to 980 in length. Should 700' be min, or should taper rate of 50:1 to 70:1 be shown. Does UDOT often use tapered entrance ramps? *Will evaluate.*

The physical gore is 6’ wide, the shoulders are 4’ and at least 8’. That would put the change from 8” solid white to 4”solid white a good distance in front of the physical gore. *Will change drawing to be more in perspective.*

“Parallel Acceleration Entrance”

Change title to read Parallel Entrance Ramp. *Will evaluate*

Traffic lane transition should read should be 300’ min not 700’. *Will evaluate.*

Delete one on the “See note 5”. *Will do.*

Correct right side 4” solid yellow line to be white. *Will do.*

Add arrow to each lane. *Will do.*

ST 3C

Add line designation table. *Will show on one table and refer to it from other tables.*

Label edge of pavement. *No, on DD drawings*

Add size to dotted lines. *No, size is proportionate as is.*

Square up physical gore. A radius is difficult to build. be consistent with physical gore. *Build radius. Add to all gores.*

The physical gore is 6' wide the shoulder are 4, and at least 8' that would but the change between the 8" solid white and the 4" solid white a good distance in front of the physical gore. Change drawing to be more realistic. *Will change drawing to be more proportionate*

Lane drop exits have overhead signs that say exit only I have never seen the words painted on the pavement. *Paint as shown*

Delete one of the leaders for 4" solid white line near the 300' dimension. *Will do.*

What information is the "RAMP Terminus" detail providing? If it is used it should have radiuses at the cross streets like the DD drawings. *Will add radii to detail. Length will reduced to show only the intersection.*

ST 3D

Label edge of pavement. *No, shown on DD Drawings*

Add LINE DESIGNATION table. *Table will be shown once and referred to from other sheets.*

Is there a min. desirable curve, or can it be as tight as superelevation and design speed will allow. *Will evaluate.*

"PARALLEL DECELERATION TWO-LANE EXIT RAMP"

The deceleration length should end at the PC of the curve since that is the element that will change the speed. The callout should be moved below the detail like the other dimensions. *Will evaluate*.

Dimension the 8" solid white line or the dotted white line.

Is the separator for the 8" to 4" line at the 14' offset or the 150' length, they probably do not coincide. *Delete 150' dimension.*

"PARALLEL DECELERATION LANE"

The 4" broken white line should transition to either a lane drop line or an 8" solid line prior to the painted gore. (300'). *Will evaluate.*

"CHANNELIZING ISLAND"

Show only striping information. Design information should be left on the DD sheet. *Will do*

D. Stakeholders? From the list provided, document the stakeholders contacted, detailing: the company, name of contact, how contacted (by phone, email, hard copy, or in person), concerns, and comments of the change. Stakeholders:

Note: There is a two-week response time set for this item. Allow Stakeholders two weeks to process and respond to coordination requests. All areas should try to complete review and comment as soon as possible but within two weeks.

In-house (for example, preconstruction, materials, construction, safety, design, maintenance) (Include all applicable in-house areas even if not listed above.)

We received at least one response (with comments or "no comment") from each of the groups listed below.

Area supervisors

AJ Roberts - no response
Bill Smith – "no comment"
Dave Babcock – "no comment"
Ervan Roades – "no comment"
Jack Mason – no response
Kevon Ogden – no response
Layne Slack – no response
Les Henrie – no response
Norton Thurgood – "no comment"
Patrick McGann – "no comment"
Ree Schena – no response
Rick Debban – no response
Robert Nebeker – no response
Steven Acerson – no response
Todd Richnins – likes elimination of wood posts
Val Stoker – no response

Construction Engineers

Complex Construction

Darrell Giannonatti – on leave
Peter Negus - "no comment"
Stan Adams – no response

Resident Engineers

Dallas Linford, - no response
Darren Rosenstein – no response
Deryl Mayhew - "no comment"
Evan Sullivan – no response
Fred Jenkins – SN 2, SN3, Commented re "24 inch tall" at electrical weatherhead.
This was corrected to read "24 inch tail"
Greg Searle – no response
Jack Lyman – no response
Jim Golden – no response
Josh VanJura – no response
Kelly Barrett – no response
Lonnie Marchant – no response
Lyndon Friant – OK with changes
Marwan Farah – no response
Michelle Page – "no comment"
Mike Seng – no response
Nick Peterson – no response
Russ Tangren – no response
Steve Niebergall – "no comment"

Const/Maint Engrs

Betty Purdie – no response
Bret Sorenson– no response
Clark Mackay – no response
Dennis Simper – no response
Kevin Griffin – no response
Nathan Merril – no response
Rob Wight – no response
Robert Westover – "no comment"
Scott Andrus – no response
Scott Nussbaum – "no comment"
Steve Ogden – ST 3B Extraneous 12' dimension on pavement; ST 3B Show 6' shoulder on DD drawings instead. This will be corrected.
Lynn Berhard – no response

Directors/Dist Engineers

Hugh Kirkham – no response
Jim McConnell – no response
Robert Dowell – no response
Cory Pope – no response
Dal Hawks – no response
David Nazare – no response
Jason Davis – Asked where is GW 4. It was dropped from this batch and will be reviewed with another group of drawings.

Permits

Barry Sawsak – "no comment"
Dale Stapley – no response
Justin Sceili – no response
Mark Valesquez – "no comment"
Marsha Chaston – no response, follow up phone call 8/9/07
Nancy Jerome – "no comment"
Scott Snow – no response, follow up phone call 8/9/07
Steve Kunzler – no response
Teri Peterson – no response
Tommy Vigil – no response

Preconstruction

Bill Lawrence – no response
Brent Schvaneveldt – "no comment"
Mike Miles – no response
Nathan Peterson – no response, follow up phone call 8/9/07

Traffic and Safety

Anne Ogden, comments and *Responses*

ST 3A
Show taper length. *Covered by note that refers to AASHTO Green Book*
What about 4 lanes tapering to 2. *Standard drawings do not cover every situation*
Add title to D column of table. *Not needed*
Notes 2, 4 and 6 don't belong on this sheet. *Deleted from this sheet*
What about edge line for two lanes in the same direction? *Stds do not cover all situations*
Exclude misspelled in note 3. *Fixed*
Note 5 change "get" to "obtain". *Changed*

ST 3B
Is left side of "700' traffic lane transition" to point of painted gore? *Yes*
Add arrows to parallel passing and acel lanes. *Agree, fixed*
Remove shoulder dimension. *Done*
Add title to D column in Table. *No, not needed*
Can "place broken line to half way point ever conflict with D values? *Yes, will clarify.*

ST 3C
Label lane drop markings. *Agree, will do*
Rotate "EXIT" and "ONLY". *Will do.*
Is distance to ONLY message nearest to exit 1140 feet. *Yes.*
Remove extra 4" solid white line leader arrow. Will do.
Ramp terminus detail. How is match to cross street handles. *Will clarify*
Add Line Designation table. *Will include on one sheet and reference to it.*

ST 3D
On parallel single decel lane what is length of broken line for exit? *Added leader to clarify.*
To what does 15:1 refer? *Will clarify*.
Include painted canalizing island. *No, Std only to cover common situations*.
To what does section A – A refer? *Removed section*.
Line designation table. *Will remove and place in one sheet only*.
SN 2 Why are wood screws still shown? *Corrected this.*
24" tall dimension.. *Change to 24" tail*.
Change note to dimension. *Done.*
Extraneous 12" dimension. *Will remove*.
Change reference to note 9 to note 8. *Changed*
Dimensions are confusing. How can sign be 7' and meter 6'? *Meter will be located below sign.*

SN 3
What is allowable distance between sign and flashing beacon? *4" as noted on drawings.*
Remove "see note five" from vertical dimension. *This applies to horizontal dimension. Removed*
Show 24" tall and 1 ¼" as dimensions. *24 " tall changed to read 24' tail. 1 ¼" is size of weatherhead*

Carrie Jacobson - no response
Danielle Herrscher – no response
Darin Duersch - no response
Dave Kinnecom – no response
Doug Bassett – no response
Eric Rasband – no response
Glen Ames – no response
Glenn Schulte – no response
John Leonard – no response
Kris Peterson – no response
Larry Montoya, Richard Hibbard –

SN 2
How is meter mounted to steel post? *Will determine detail used and include.*
If post breaks away, how are overhead power lines dealt with? *Will determine*
Show underground power source as an option? *Will investigate*
Consider using solar power panels as power option. *Will consider*

SN 3
How is meter mounted to steel post? *Will determine detail used and include.*
If post breaks away, how are overhead power lines dealt with? *Will determine*
Show underground power source as an option? *Will investigate*
Consider using solar power panels as power option. *Will consider*
For overhead power option, delete in ground junction box. *Will do.*

Michael Cuthbert – no response
Michael Kaczorowski – no comment
Mike Donivan – previous comments incorporated
Rob Clayton – previous comments incorporated
Robert Markle – previous comments incorporated
Troy Petersonno – no response
Troy Torgersen – previous comments incorporated
W. Scott Jones – no comment
Roland Stanger – previous comments incorporated

Risk Management

Carl Johnson – no response
Dan Webster – no response
Dotie Weese – no response
George Leighton – no response
Keith Bladen – no response
Steve Bonner – no comment
Garr Ovard – no response

Senior Project Managers

Joe Kammerer – no response
Merril Jolley – no response
Nathan Lee – no response
Rick Torgerson – no response

Project Managers

Dave Adamson – no response
Teresa Booth – no response
John Clarkson – no response
Lori Dabling – no comment
Daniel Young – no comment
Daryl Friant – no comment
Darin Fristrup – no comment
John Higgins – no response
Philip Huff – no response
Brad Humphreys – no response
Cameron Keraye – no response
Charles Mace – no response, follow up phone 8/9/07
Kim Manwill – no response
Tamerha Maxwell – no response
John Montoya – no response
TeriAnne Newell – no response
Marjorie Rasmussen

ST 3A

1. Not all of the lines noted in Line Designation box are shown in the drawing. Also the box is not the same as it is in ST 3B. There should be consistency in how and where this information is provided. *Will use one table and refer to it from other drawings.*

2. There should be a note describing the Taper Length or referring to AASHTO. *Will add note referring to AASHTO, as on 3B, 3C, 3D*

ST 3B

1. Is note 5 written correctly? *Will delete note*

ST 3C
1. The Exit Only kind of looks like it should be painted on the roadway. Should this be shown using a note? *Will decide if painted or not, then add appropriate note.*

Peter Tang – no response
Richie Taylor – no response
Kirk Thornock – no response
Lisa Wilson – no response

Contractors (Any additional contacts beyond "C" above.)
AGC only

Suppliers
None

Consultants (as required) (Any additional contacts beyond "C" above.)
ACEC only

FHWA (To be accomplished as part of the two-week process before submitting to the Standards and Specifications Section for inclusion on the Standards Committee agenda.) (This is in addition to the requirements of UDOT Policy 08A5-1, procedure 08A5-1.3.)
Extensive Meetings with Roland Stanger

Others (as appropriate)
None

E. Other impacted areas, systems, or personnel. (Consider all impacts and possible changes to these areas during the preparation process. Coordinate with all appropriate areas for the respective item. List all impacts and action taken.)

1. Minimum Sampling and Testing Guide (MS&T Guide)
No change

2. Business Systems (Electronic Bid System, Project Development Business System, Electronic Program Management, Computer-Aided Drafting and Design, etc.)
No change to bid system

3. Implementation Plan (Provide detailed instructions on how the subject item will be implemented to include notification of all interested parties and training requirements.)
Change will go into effect when Revised Standard Drawings are published and made public.

F. Costs? (Estimates are acceptable.)

1. Additional costs to average bid item price.
   Slightly higher initial posts for use of metal vs wood posts.

2. Operational (For example, maintenance, materials, equipment, labor, administrative, programming).
   No significant change in operation efforts or costs. Some savings because of less difficult replacement when school speed limit assembly is knocked down

3. Life cycle cost.

   Estimate no significant changes in costs, therefore no significant changes in life cycle costs

G. Benefits? (Provide details that can be used to complete a Cost – Benefit Analysis.) (Estimates are acceptable.) (If no costs, what is the benefit of making this change?)
   Benefits include lower accident and fatality rates. Cost for implementing the changes is small.

H. Safety Impacts?

   Safety should improve updated standards.

I. History? Address issues relating to the current usage of the item and past reviews, approvals, and/or disapprovals.
   No pertinent history is available

Priority Explanation

Enter the appropriate priority in the box on the first page of the document.

Priority 1 Upon posting, this impacts all projects in construction and design with a Change Order, Addenda, and immediate change to projects being advertised.

Priority 2 Upon posting, this impacts projects being advertised.

Priority 3 Upon posting, the approved standard takes effect **four weeks** later for projects being advertised.

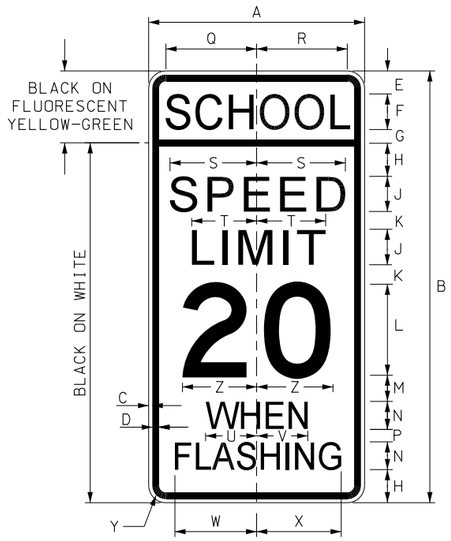

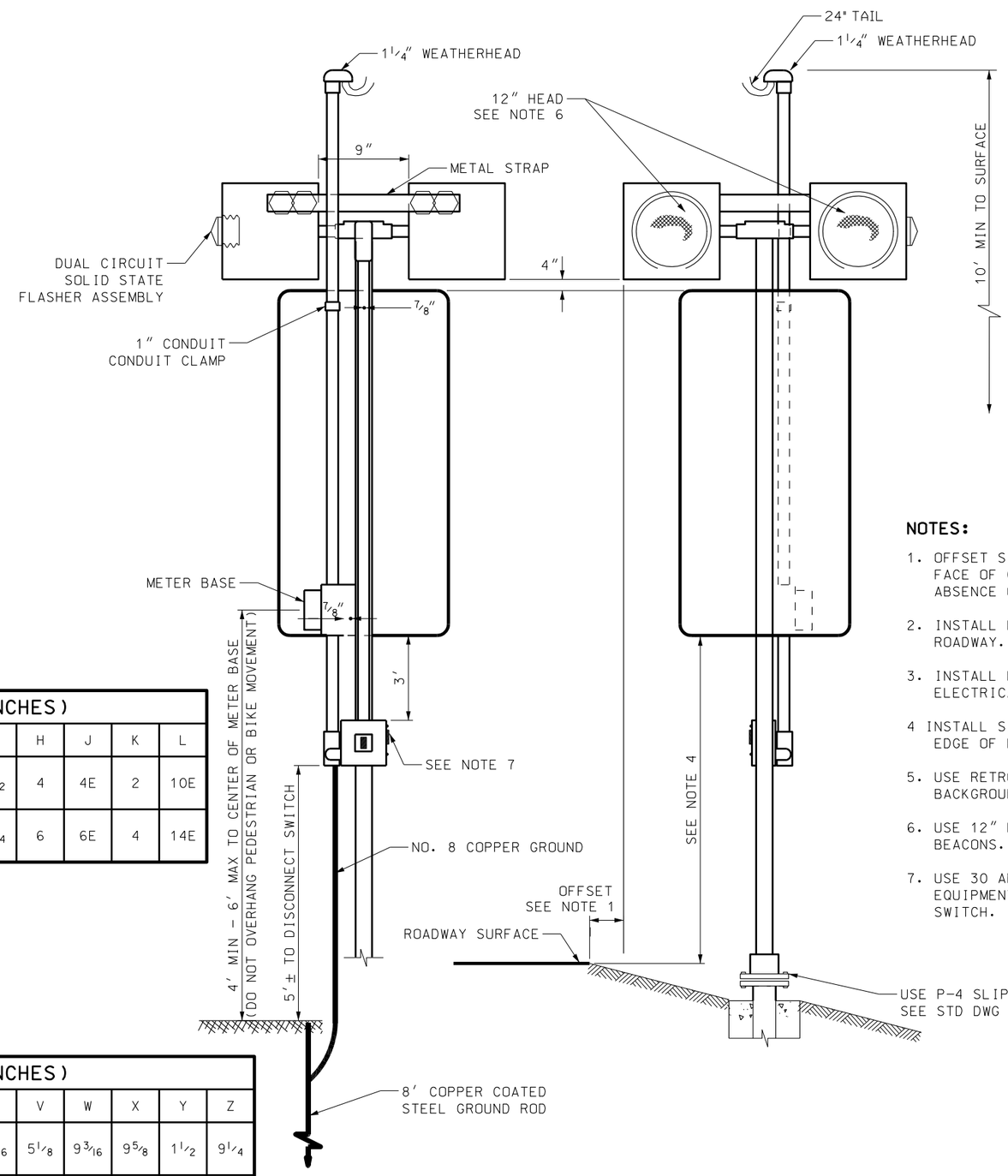

SIGN	DIMENSION (INCHES)										
	A	B	C	D	E	F	G	H	J	K	L
CONVENTIONAL ROAD	24	48	3/8	5/8	2 1/2	4D	1 1/2	4	4E	2	10E
SPECIAL	36	72	5/8	7/8	3 3/4	6D	2 1/4	6	6E	4	14E

SIGN	DIMENSION (INCHES)											
	M	N	P	R	S	T	U	V	W	X	Y	Z
CONVENTIONAL ROAD	3	2 1/2 D	2	10 1/4	9 9/16	7 7/16	5 3/16	5 1/8	9 3/16	9 5/8	1 1/2	9 1/4
SPECIAL	4	4D	2	15 3/8	14 3/8	11	6 15/16	6 13/16	12 1/4	12 7/8	2 1/4	13 7/8

NOTES:

1. OFFSET SIGN ASSEMBLY A MINIMUM OF 1.5 FEET FROM FACE OF CURB OR 6 FEET FROM TRAVELED WAY IN ABSENCE OF CURB.
2. INSTALL FACE OF SIGN AT 90° ANGLE TO THE EDGE OF ROADWAY.
3. INSTALL POWER SUPPLY IN ACCORDANCE WITH NATIONAL ELECTRICAL CODE.
4 INSTALL SIGN 7 FEET AS MEASURED FROM THE NEAREST EDGE OF ROADWAY SURFACE TO BOTTOM OF SIGN.
5. USE RETROREFLECTIVE SIGN SHEETING FOR ALL BACKGROUNDS, COLORS AS NOTED.
6. USE 12" LED YELLOW BEACONS FOR SPEED LIMIT SIGN BEACONS.
7. USE 30 AMP WEATHERPROOF DISCONNECT SWITCH EQUIPMENT. GROUND NEUTRAL TO THE FRAME AT THE SWITCH.

REVISIONS

NO.	DATE	APPR.	REMARKS

UTAH DEPARTMENT OF TRANSPORTATION
STANDARD DRAWINGS FOR ROAD AND BRIDGE CONSTRUCTION
SALT LAKE CITY, UTAH

RECOMMENDED FOR APPROVAL — JAN.01,2008 DATE
CHAIRMAN STANDARDS COMMITTEE APPROVED — JAN.01,2008 DATE
DEPUTY DIRECTOR

SCHOOL SPEED LIMIT ASSEMBLY
STANDARD DRAWING TITLE

STD DWG
SN 2

DGN Files:D:\StandardsandSpecsSection\Standards Committee\MeetingFiles\2007\4-August30,07\Mtg\Drawings\SN02.dgn
14-AUG-2007

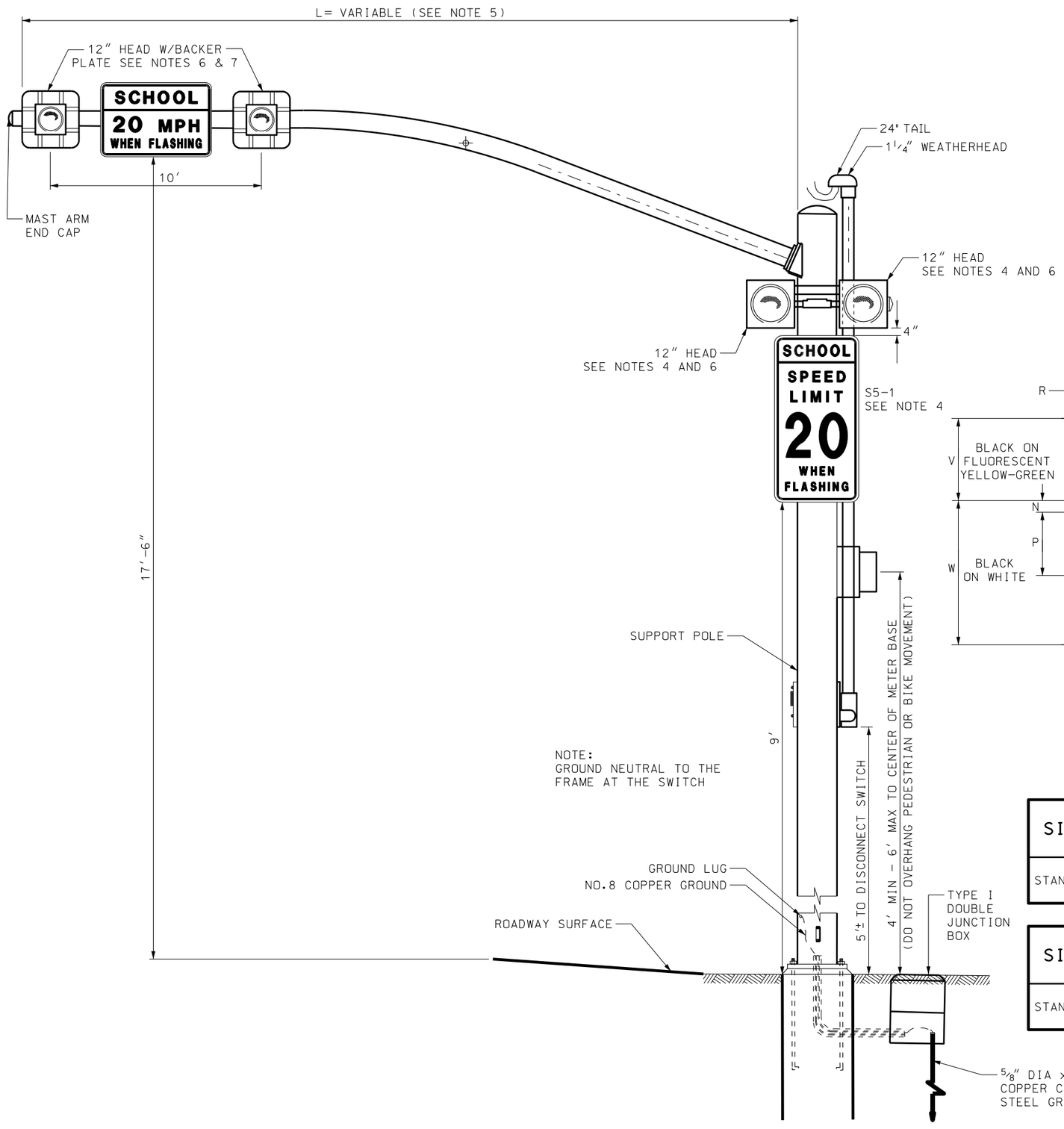

NOTES:

1. USE CURRENT EDITION OF AASHTO ROADSIDE DESIGN GUIDE FOR CLEAR ZONE REQUIREMENTS.
2. POLES, ARMS AND FOUNDATIONS SEE STD DWG SL 1 AND SL 2.
3. USE RETROREFLECTIVE SIGN SHEETING FOR ALL BACKGROUNDS, COLORS AS NOTED.
4. SEE STD DWG SN 2 FOR DESIGN OF S5-1 SIGN AND SPEED LIMIT SIGN BEACON ASSEMBLY.
5. CENTER OVERHEAD SIGN OVER THROUGH TRAFFIC LANE(S).
6. USE 12" LED YELLOW BEACONS.
7. USE BLACK LIGHT-WEIGHT LOUVERED BACKER PLATE PROVIDING 5 INCH REVEAL ON ALL SIDES.
8. INSTALL POWER SUPPLY IN ACCORDANCE WITH NATIONAL ELECTRICAL CODE.
9. USE 30 AMP WEATHERPROOF DISCONNECT SWITCH EQUIPMENT. GROUND NEUTRAL TO THE FRAME AT THE SWITCH.

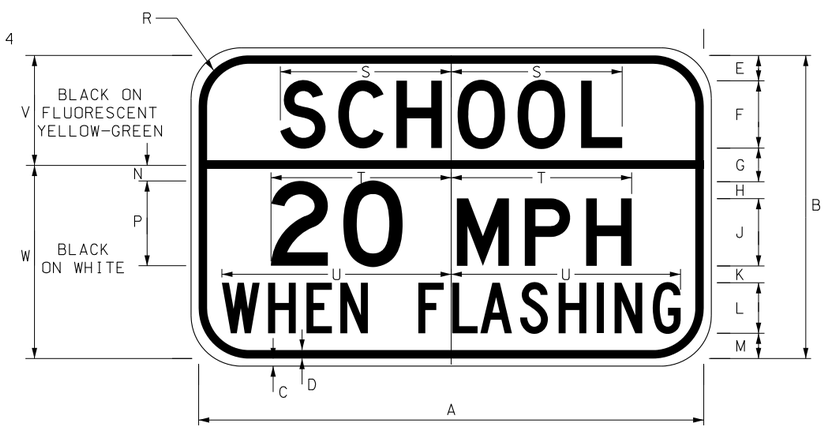

SIGN	DIMENSION (INCHES)										
	A	B	C	D	E	F	G	H	J	K	L
STANDARD	60	36	5/8	7/8	3	8D	2	4	8D	2	6C

SIGN	DIMENSION (INCHES)								
	M	N	P	R	S	T	U	V	W
STANDARD	3	2	10D	2 1/4	20 1/4	21 3/8	27 1/4	24	12

NO.	DATE	APPR.	REMARKS

REVISIONS

UTAH DEPARTMENT OF TRANSPORTATION
STANDARD DRAWINGS FOR ROAD AND BRIDGE CONSTRUCTION
SALT LAKE CITY, UTAH

RECOMMENDED FOR APPROVAL — JAN.01,2008 DATE
CHAIRMAN STANDARDS COMMITTEE APPROVED — JAN.01,2008 DATE
DEPUTY DIRECTOR

OVERHEAD SCHOOL SPEED LIMIT ASSEMBLY
STANDARD DRAWING TITLE

STD DWG
SN 3

DGN File: G:\StandardsandSpecsSection\Standards Committee\MeetingFiles\2007\14-August30,07Mtg\Drawings\SN03.dgn
14-AUG-2007

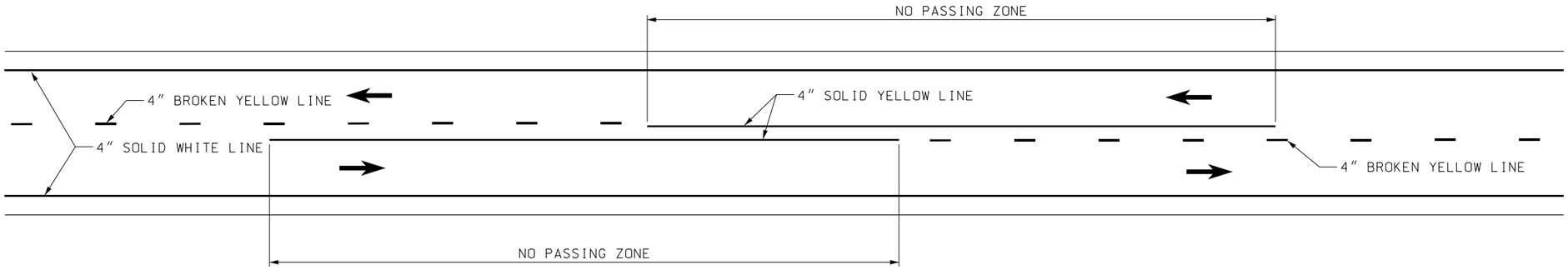

TWO-LANE TWO-WAY

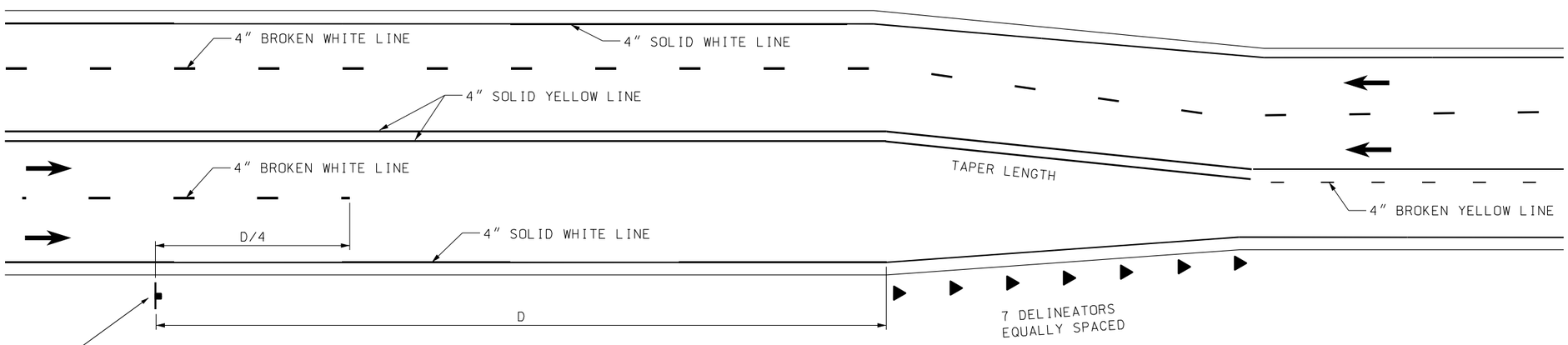

LANE REDUCTION TRANSITION

LINE DESIGNATION			
TYPE	WIDTH (IN)	LENGTH (FT)	GAP (FT)
SOLID LINE	4	CONTINUOUS	N/A
CHANNELIZING	8	CONTINUOUS	N/A
BROKEN LINE	4	10	30
LANE DROP	8	3	12
DOTTED LINE	4	2	6
TEMP. BROKEN	4	4	36

MPH	D (FEET)
20	225
25	325
30	450
35	550
40	650
45	750
50	850
55	950
60	1100
65	1200
70	1250
75	1350

NOTES:

1. USE FULLY RETROREFLECTORIZED MATERIAL FOR ALL PAVEMENT MARKINGS.
2. TIE RAMP EDGE LINE INTO EXISTING EDGE LINE ON THE CROSS STREET WITH A GRADUAL TRANSITION. DISCONTINUE RAMP EDGE LINE AT THE CROSS STREET EDGE OF PAVEMENT.
3. PAINT AN EDGE LINE IN AREAS WHERE PAVEMENT EXTENDS TO CURB AND GUTTER, TO DEFINE THE TRAVEL PATH OF A TYPICAL LANE (11 OR 12 FEET WIDE) WHEN THE LATERAL DISTANCE FROM OUTSIDE 4" BROKEN YELLOW LINE OR PERMISSIVE TURN LANE TO LIP OF GUTTER IS 16 FEET OR GREATER. THE REGION TRAFFIC ENGINEER CAN AUTHORIZE EXCEPTIONS TO EXLUDE EDGE LINES IN THESE AREAS.
4. PAINT THE LEFT EDGE OF EACH ROADWAY OF DIVIDED ROADS WITH A YELLOW EDGE LINE.
5. GET APPROVAL FROM THE TRAFFIC AND SAFETY DIVISION FOR CHANGES TO EXISTING OR INSTALLATION OF NEW NO PASSING ZONES.
6. CONTACT THE REGION TRAFFIC ENGINEER FOR STRIPING AND PAVEMENT MARKINGS ON MULTI-LANE RAMP TERMINI.

REVISIONS

NO.	DATE	APPR.	REMARKS

UTAH DEPARTMENT OF TRANSPORTATION
STANDARD DRAWINGS FOR ROAD AND BRIDGE CONSTRUCTION
SALT LAKE CITY, UTAH

RECOMMENDED FOR APPROVAL — JAN.01,2008 DATE
CHAIRMAN STANDARDS COMMITTEE APPROVED — JAN.01,2008 DATE
DEPUTY DIRECTOR

TYPICAL PAVEMENT MARKINGS
STANDARD DRAWING TITLE

STD DWG
ST 3A

DGN Files:D:\StandardsandSpecsSection\Standards Committees\MeetingFiles\2007\4-August30,07\Mtg\Drawings\ST03A.dgn
14-AUG-2007

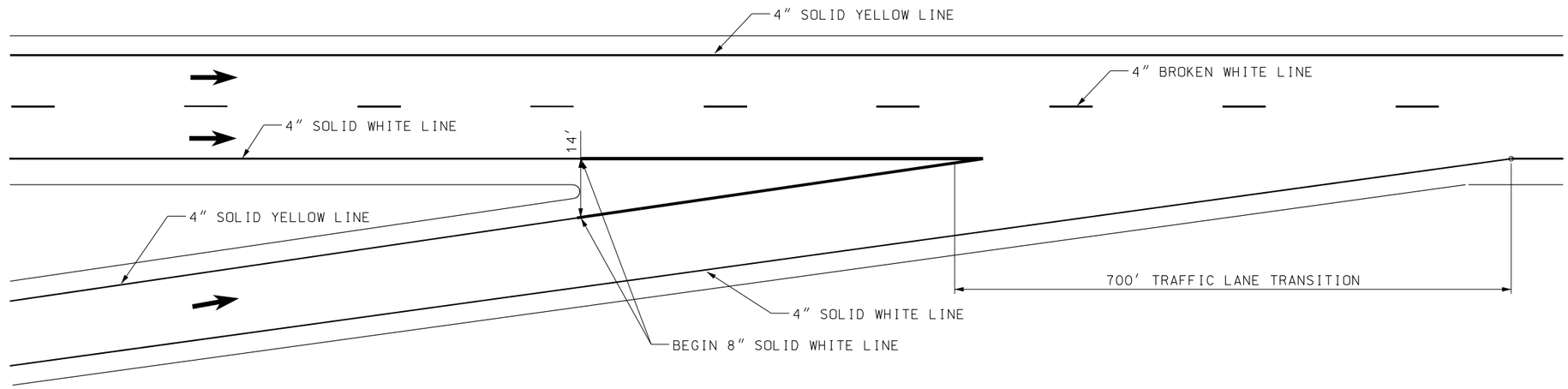

ENTRANCE RAMP

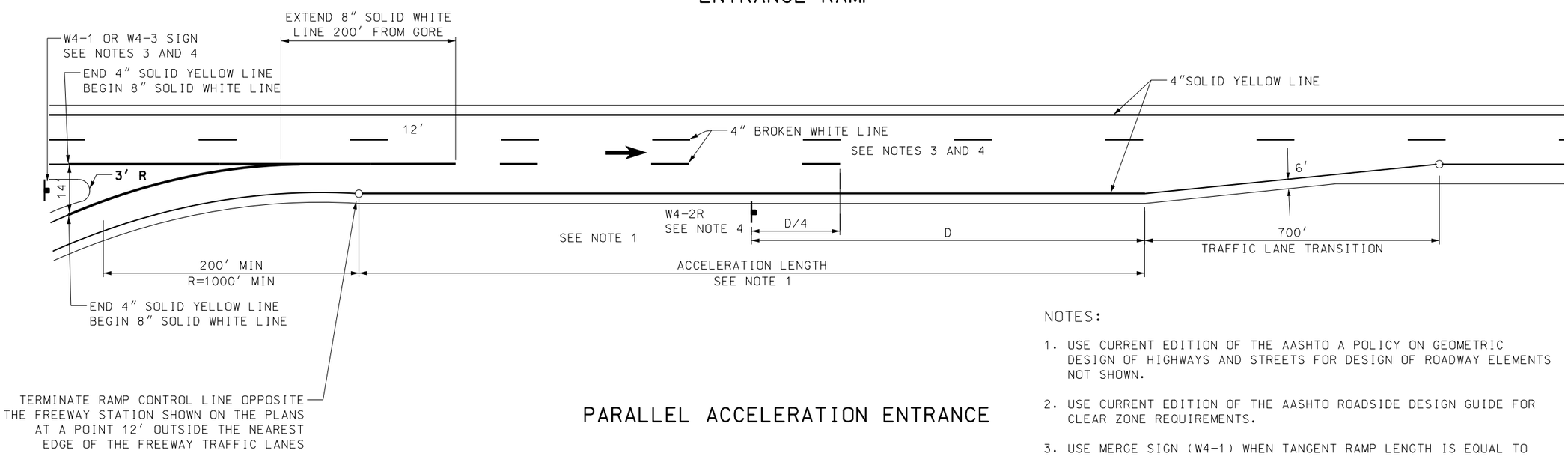

PARALLEL ACCELERATION ENTRANCE

LINE DESIGNATION			
TYPE	WIDTH (IN)	LENGTH (FT)	GAP (FT)
SOLID LINE	4	CONTINUOUS	N/A
BROKEN LINE	4	10	30
LANE DROP	8	3	12
DOTTED LINE	4	2	6
TEMP. BROKEN	4	4	36

MPH	D (FEET)	3/4 D (FEET)
20	225	170
25	325	250
30	450	325
35	550	400
40	650	500
45	750	550
50	850	625
55	950	700
60	1100	825
65	1200	900
70	1250	925
75	1350	1000

NOTES:

1. USE CURRENT EDITION OF THE AASHTO A POLICY ON GEOMETRIC DESIGN OF HIGHWAYS AND STREETS FOR DESIGN OF ROADWAY ELEMENTS NOT SHOWN.
2. USE CURRENT EDITION OF THE AASHTO ROADSIDE DESIGN GUIDE FOR CLEAR ZONE REQUIREMENTS.
3. USE MERGE SIGN (W4-1) WHEN TANGENT RAMP LENGTH IS EQUAL TO AASHTO ACCELERATION LENGTH.

   PLACE BROKEN LINE TO THE HALFWAY POINT OF THE AASHTO ACCELERATION LENGTH WHEN USING THE W4-1 SIGN.

   DO NOT USE LANE ENDS SIGN (W4-2) WHEN USING THE W4-1 SIGN.
4. USE ADDED LANE SIGN (W4-3) WHEN TANGENT RAMP LENGTH EXCEEDS THE AASHTO ACCELERATION LENGTH.

   PLACE BROKEN LINE AND DOTTED LINE TO THE 3/4 "D" POINT WHEN USING THE W4-3 SIGN.

   PLACE LANE ENDS SIGN (W4-2) ONLY WHEN USING THE W4-3 SIGN.
5. SEE STD DWG ST 3 FOR PAVEMENT MARKINGS.

REVISIONS

NO.	DATE	APPR.	REMARKS

UTAH DEPARTMENT OF TRANSPORTATION
STANDARD DRAWINGS FOR ROAD AND BRIDGE CONSTRUCTION
SALT LAKE CITY, UTAH

RECOMMENDED FOR APPROVAL — JAN.01,2008 DATE
CHAIRMAN STANDARDS COMMITTEE APPROVED — JAN.01,2008 DATE
DEPUTY DIRECTOR

TYPICAL PAVEMENT MARKINGS
STANDARD DRAWING TITLE

STD DWG
ST 3B

DGN Files:D:\StandardsandSpecsSection\Standards Committee\MeetingFiles\2007\4-August30_07\Mtg\Drawings\ST03B.dgn
14-AUG-2007

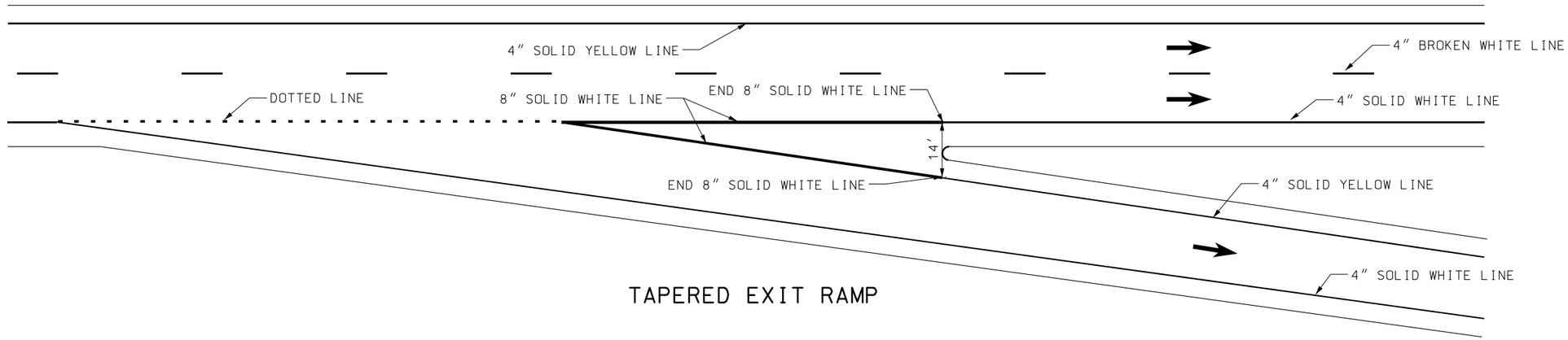

TAPERED EXIT RAMP

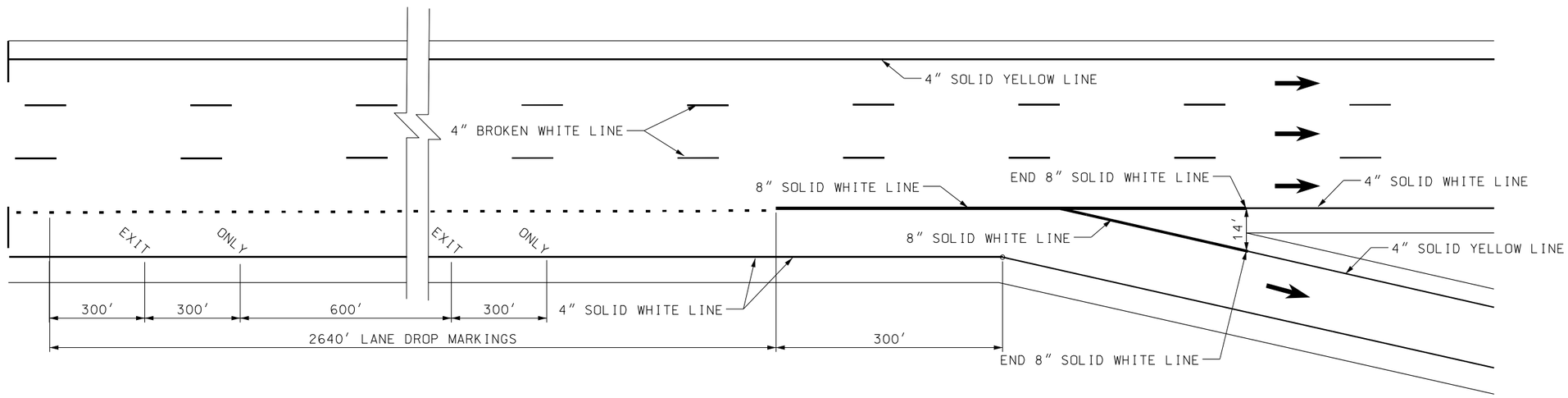

LANE DROP EXIT RAMP

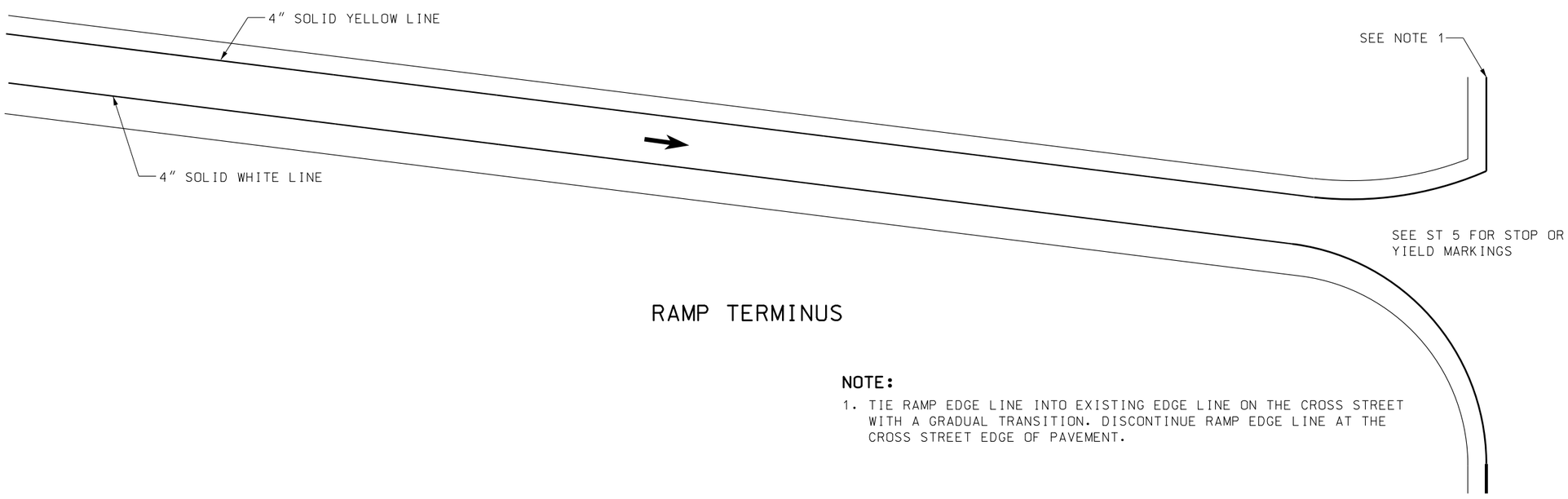

RAMP TERMINUS

NOTE:

1. TIE RAMP EDGE LINE INTO EXISTING EDGE LINE ON THE CROSS STREET WITH A GRADUAL TRANSITION. DISCONTINUE RAMP EDGE LINE AT THE CROSS STREET EDGE OF PAVEMENT.

REVISIONS

NO.	DATE	APPR.	REMARKS

UTAH DEPARTMENT OF TRANSPORTATION
STANDARD DRAWINGS FOR ROAD AND BRIDGE CONSTRUCTION
SALT LAKE CITY, UTAH

RECOMMENDED FOR APPROVAL — JAN.01,2005 DATE
CHAIRMAN STANDARDS COMMITTEE APPROVED — JAN.01,2005 DATE
DEPUTY DIRECTOR

TYPICAL PAVEMENT MARKINGS

STANDARD DRAWING TITLE

STD DWG
ST 3C

DGN Files:D:\Standards\SpecsSection\Standards Committee\MeetingFiles\2007\4-August30_07\Mtg\Drawings\ST03C.dgn
14-AUG-2007

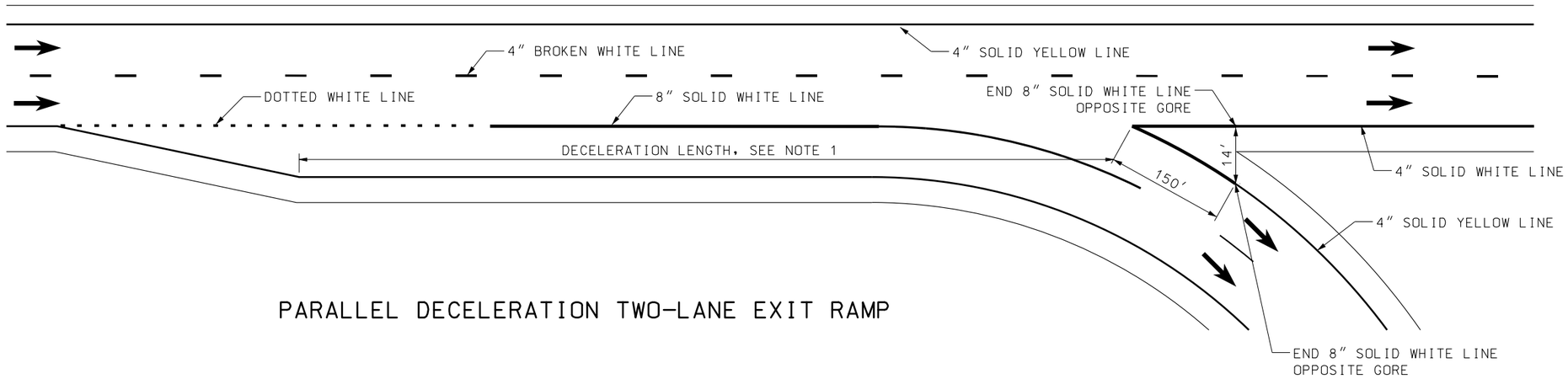

PARALLEL DECELERATION TWO-LANE EXIT RAMP

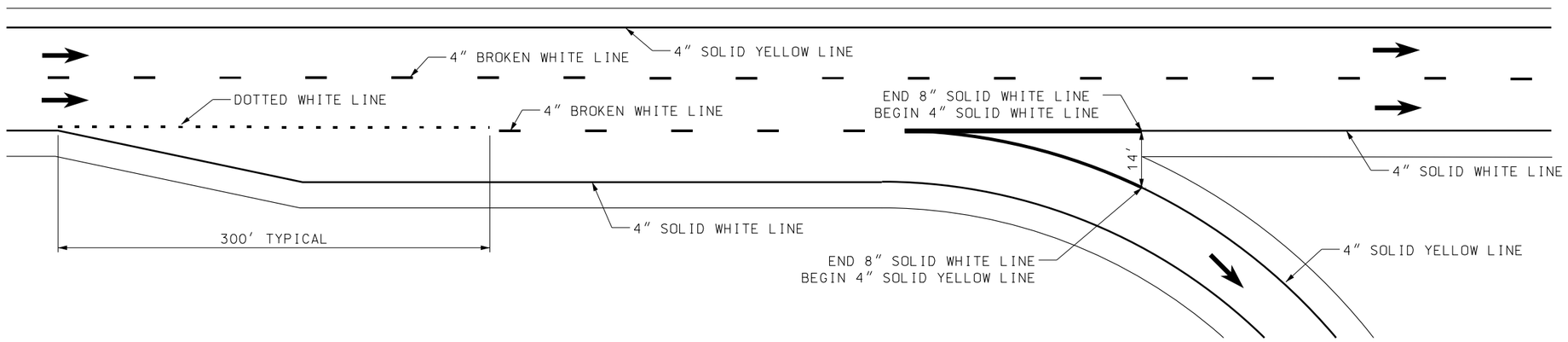

PARALLEL DECELERATION LANE

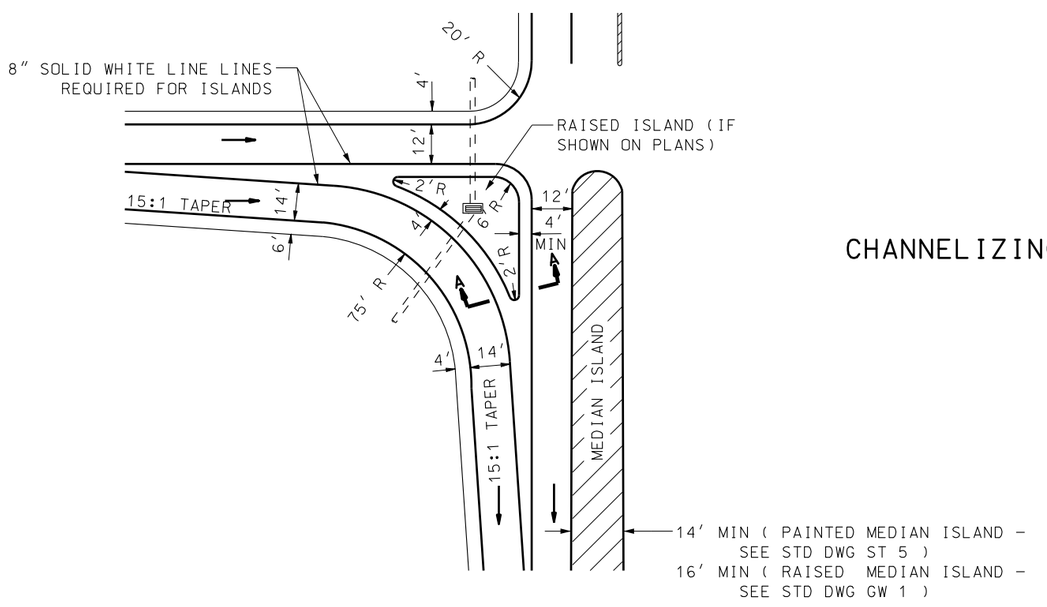

CHANNELIZING ISLAND

NOTES:

1. USE CURRENT EDITION OF THE AASHTO A POLICY ON GEOMETRIC DESIGN OF HIGHWAYS AND STREETS FOR DESIGN OF ROADWAY ELEMENTS NOT SHOWN.

REVISIONS

NO.	DATE	APPR.	REMARKS

UTAH DEPARTMENT OF TRANSPORTATION
STANDARD DRAWINGS FOR ROAD AND BRIDGE CONSTRUCTION
SALT LAKE CITY, UTAH

RECOMMENDED FOR APPROVAL — JAN.01,2008 DATE
CHAIRMAN STANDARDS & TECHNICAL COMMITTEE APPROVED — JAN.01,2008 DATE
DEPUTY DIRECTOR

TYPICAL PAVEMENT MARKINGS

STANDARD DRAWING TITLE

STD DWG
ST 3D

DGN File:D:\Standards\SpecsSection\Standards Committee\MeetingFiles\2007\14-August-32.07\Mtg\Drawings\ST03D.dgn
14-AUG-2007

Standards Committee Submittal Sheet

Name of preparer: John Leonard
Title/Position of preparer: Traffic and Safety Operations Engineer
Specification/Drawing/Item Title: General Work 1 and Signing 7 Drawings
Specification/Drawing Number: GW 1A, GW 1B, SN 7A, and SN-7B

Enter appropriate priority level:
(See last page for explanation) **3**

Sheet not required on editorial or minor changes to standards. Check with Standards Section.

NOTES:

1. All Submittal Sheets must be completed and sent to the Standards and Specifications Section by the Standards Committee suspense date as shown on the Web. (http://www.udot.utah.gov/index.php/m=c/tid=303)
2. The Preparer of the Submittal Sheet or the Standards Committee member (or authorized substitute) responsible for the submittal must be present at the Standards Committee meeting and capable of discussing and answering all questions related to the submittal. The item will be postponed to a later meeting if one of these people is not present.
3. Notify the Standards and Specifications Section immediately of any changes that impact the presentation to include absence of sponsor or delay in presentation.

Complete the following: (Use additional pages as needed.)

A. Why? Detail the reason for changing the Standard (Specification or Drawing), what has initiated a new Standard, or what has caused a new or changed item of interest.

Review of existing GW and SN Series Drawings. Drawings have been modified as required to bring into conformance with the MUTCD, the Roadside Design Guide, the AASHTO Green Book, and Department practice. Provided as a separate attachment is a detailed description of changes made to each sheet.

B. How is Measurement and Payment handled? Existing (from the measurement and payment document), modified, or new measurement and payment to be included with all Standard Specifications or Supplemental Specifications.

Existing

C. Stakeholder Notification for AGC and ACEC:

By email provide the AGC and ACEC Standards Committee member a copy of all pertinent information relating to the specification or drawing. Detail all responses below. Indicate if no comments were received.

Note: There is a two-week response time set for this item.

Refer to the Standards Committee Web site, Members page at http://www.udot.utah.gov/index.php/m=c/tid=659 for the respective e-mail addresses.

AGC Comments: (Use as much space as necessary.)

No Comments
Attached in Comment Resolution document.

ACEC Comments: (Use as much space as necessary.)

No Comments
Attached in Comment Resolution document.

D. Stakeholders? From the list provided, document the stakeholders contacted, detailing: the company, name of contact, how contacted (by phone, email, hard copy, or in person), concerns, and comments of the change. Stakeholders:

Note: There is a two-week response time set for this item. Allow Stakeholders two weeks to process and respond to coordination requests. All areas should try to complete review and comment as soon as possible but within two weeks.

List of all individuals attached.

In-house (for example, preconstruction, materials, construction, safety, design, maintenance) (Include all applicable in-house areas even if not listed above.)

All Project Managers, all Preconstruction Engineers, all Traffic Engineers, all Maintenance Engineers, all Area Supervisors, all Region and District Directors, and all members of the Standards Committee.

Construction Engineers

All Construction Engineers, Central Construction, and REs

Contractors (Any additional contacts beyond “C” above.)

None

Suppliers

None

Consultants (as required) (Any additional contacts beyond “C” above.)

None

FHWA (To be accomplished as part of the two-week process before submitting to the Standards and Specifications Section for inclusion on the Standards Committee agenda.) (This is in addition to the requirements of UDOT Policy 08A5-1, procedure 08A5-1.3.)

Anthony Sarahan. Roland Stanger has been a partner throughout the review process.

Others (as appropriate)

None

E. Other impacted areas, systems, or personnel. (Consider all impacts and possible changes to these areas during the preparation process. Coordinate with all appropriate areas for the respective item. List all impacts and action taken.)

1. Minimum Sampling and Testing Guide (MS&T Guide)

   None

2. Business Systems (Electronic Bid System, Project Development Business System, Electronic Program Management, Computer-Aided Drafting and Design, etc.)

   None

3. Implementation Plan (Provide detailed instructions on how the subject item will be implemented to include notification of all interested parties and training requirements.)

   None

F. Costs? (Estimates are acceptable.)

1. Additional costs to average bid item price.

   None

2. Operational (For example, maintenance, materials, equipment, labor, administrative, programming).

   None

3. Life cycle cost.

   None

G. Benefits? (Provide details that can be used to complete a Cost – Benefit Analysis.) (Estimates are acceptable.) (If no costs, what is the benefit of making this change?)

Compliance with the MUTCD, AASHTO Green Book, and safer operating practices.

H. Safety Impacts?

Compliance with the MUTCD, AASHTO Green Book, and safer operating practices.

I. History? Address issues relating to the current usage of the item and past reviews, approvals, and/or disapprovals.

Provides guidance on the installation and raised medians, and ground mounted signs.

Priority Explanation

Enter the appropriate priority in the box on the first page of the document.

Priority 1 Upon posting, this impacts all projects in construction and design with a Change Order, Addenda, and immediate change to projects being advertised.

Priority 2 Upon posting, this impacts projects being advertised.

Priority 3 Upon posting, the approved standard takes effect **four weeks** later for projects being advertised.

Mail Envelope Properties (469D4F75.8C7 : 156 : 5649)

Subject: Request for comments, proposed changes to Standard Drawings GW 1 and SN 7
Creation Date Tuesday, July 17, 2007 5:23 PM
From: JOHN LEONARD

Created By: JLEONARD@utah.gov

Recipients	**Action**	**Date & Time**
civilscience.com	Transferred	07/17/07 5:24 PM
tyorgason (Tyler Yorgason)		
dot.gov	Transferred	07/17/07 5:24 PM
anthony.sarhan (Anthony Sarhan)		
Roland.Stanger CC (Roland Stanger)		
gcinc.com	Transferred	07/17/07 5:24 PM
mont.wilson (Mont Wilson)		
utah.gov		
SRCOPO1.SRDOMAIN	Delivered	07/17/07 5:23 PM
BAXELROD CC (Barry Axelrod)	Opened	07/17/07 6:26 PM
BWHEELER (Boyd Wheeler)	Opened	07/18/07 7:57 AM
DGIANNONATTI CC (Darrell Giannonatti)	Opened	07/27/07 5:50 AM
GSCHULTE (Glenn Schulte)	Opened	07/18/07 6:39 AM
JLEONARD (John Leonard)	Opened	07/17/07 5:26 PM
LMONTOYA (Larry Montoya)	Opened	07/19/07 9:27 AM
LYNNBERNHARD CC (Lynn Bernhard)		
MBCUTHBERT (Michael Cuthbert)	Opened	07/17/07 5:32 PM
	Deleted	07/26/07 11:06 AM
	Emptied	07/27/07 2:35 PM
MDONIVAN (Mike Donivan)	Opened	07/18/07 7:18 AM
	Forwarded	07/18/07 7:23 AM
MKACZOROWSKI (Michael Kaczorowski)	Opened	07/17/07 5:29 PM
PNEGUS CC (Peter Negus)	Deleted	07/26/07 11:05 AM
RHULL (Robert Hull)		
RICHARDCLARKE (Richard Clarke)	Opened	07/20/07 10:42 AM
	Replied	07/20/07 10:43 AM
RLINDSEY (Rukhsana Lindsey)	Downloaded	07/26/07 4:54 PM
ROBERTMILES CC (Robert Miles)	Opened	07/19/07 3:05 PM
SBURNS (Stan Burns)	Opened	07/18/07 10:05 AM
	Deleted	07/18/07 2:44 PM
STANADAMS CC (Stan Adams)	Opened	07/18/07 7:32 AM
TBIEL (Tim Biel)	Opened	07/20/07 8:37 AM

WSJONES (W. Scott Jones)	Opened	07/18/07 10:56 AM
	Deleted	07/18/07 10:56 AM
	Emptied	07/25/07 1:22 AM
utah.gov		
SRR1PO1.SRDOMAIN	Delivered	07/17/07 5:23 PM
BILLSMITH (Bill Smith)	Opened	07/18/07 6:14 AM
	Deleted	07/18/07 6:15 AM
	Emptied	07/30/07 4:19 PM
CJACOBSON (Carrie Jacobson)	Opened	07/18/07 9:42 AM
CORYPOPE CC (Cory Pope)	Opened	07/17/07 9:37 PM
DDUERSCH (Darin Duersch)	Opened	07/17/07 5:23 PM
DENNISSIMPER (Dennis Simper)	Opened	07/17/07 9:52 PM
	Deleted	07/26/07 2:58 PM
GLENAMES (Glen Ames)	Opened	07/18/07 8:16 AM
	Deleted	07/18/07 8:16 AM
	Emptied	07/25/07 12:44 PM
KGRIFFIN (Kevin Griffin)	Opened	07/18/07 8:51 AM
	Deleted	07/18/07 1:20 PM
	Emptied	07/18/07 1:20 PM
NATEPETERSON (Nathan Peterson)		
NLEE (Nathan Lee)	Opened	07/17/07 5:23 PM
	Deleted	07/18/07 7:22 AM
NTHURGOOD (Norton Thurgood)	Opened	07/18/07 5:53 AM
	Emptied	07/19/07 4:21 PM
	Deleted	07/19/07 4:21 PM
REXHARRIS (Rex Harris)		
SNUSSBAUM (Scott Nussbaum)	Opened	07/18/07 6:24 AM
VSTOKER (Val Stoker)	Opened	07/24/07 7:18 AM
utah.gov		
SRR2PO1.SRDOMAIN	Delivered	07/17/07 5:23 PM
BILLLAWRENCE (Bill Lawrence)	Opened	07/18/07 6:35 AM
BPURDIE (Betty Purdie)	Opened	07/18/07 6:58 AM
	Forwarded	07/19/07 11:39 AM
	Replied	07/19/07 12:16 PM
	Deleted	07/19/07 12:16 PM
	Emptied	07/27/07 1:04 AM
JASONDAVIS CC (Jason Davis)	Opened	07/18/07 8:27 AM
	Forwarded	07/18/07 8:28 AM
	Deleted	07/18/07 8:28 AM
	Emptied	07/18/07 1:24 PM
JKammerer (Joe Kammerer)	Opened	07/18/07 7:05 AM
	Replied	07/18/07 8:46 AM
	Deleted	07/18/07 8:46 AM
	Emptied	07/26/07 1:06 AM

JMMASON (Jack Mason)	Deleted	07/18/07 8:04 AM
	Emptied	07/26/07 1:07 AM
KEVONOGDEN (Kevon Ogden)	Opened	07/18/07 7:16 AM
	Replied	07/30/07 7:10 AM
	Deleted	07/30/07 7:10 AM
KRISPETERSON (Kris Peterson)	Opened	07/18/07 7:29 AM
	Replied	07/19/07 9:24 AM
	Deleted	07/23/07 7:16 AM
	Emptied	07/31/07 1:04 AM
RDEBBAN (Rick Debban)		
RPARK (Randy Park)	Opened	07/17/07 6:21 PM
	Deleted	07/23/07 3:41 PM
	Emptied	07/31/07 1:06 AM
RWIGHT (Rob Wight)	Opened	07/25/07 6:56 AM
	Replied	07/31/07 9:05 AM
TLRICHINS (Todd Richins)	Opened	07/18/07 7:11 AM
	Replied	07/27/07 11:31 AM
	Deleted	07/27/07 11:31 AM

utah.gov

SRR3PO1.SRDOMAIN	Delivered	07/17/07 5:23 PM
BSCHVANEVELDT (Brent Schvaneveldt)	Opened	07/18/07 6:31 AM
	Replied	07/18/07 6:41 AM
	Deleted	07/18/07 6:41 AM
	Emptied	07/26/07 1:01 AM
DBASSETT (Doug Bassett)	Opened	07/17/07 5:28 PM
DNAZARE CC (David Nazare)	Opened	07/18/07 7:50 AM
	Deleted	07/18/07 7:50 AM
	Emptied	07/26/07 1:01 AM
ERHOADES (Ervan Rhoades)	Opened	07/18/07 12:45 PM
	Deleted	08/01/07 11:14 AM
	Emptied	08/01/07 11:25 AM
MERRELLJOLLEY (Merrell Jolley)	Opened	07/26/07 4:08 PM
RMARKLE (Robert Markle)	Opened	07/18/07 6:39 AM
	Replied	07/18/07 10:58 AM
RWESTOVER (Robert Westover)	Opened	07/18/07 7:51 AM
	Replied	07/18/07 7:52 AM
	Deleted	07/18/07 7:52 AM
SACERSON (Steven Acerson)	Opened	07/17/07 5:37 PM
	Deleted	07/17/07 5:38 PM
	Emptied	07/19/07 4:12 PM
SCOTTANDRUS (Scott Andrus)	Opened	07/17/07 5:23 PM
	Deleted	07/30/07 8:06 AM
	Emptied	07/30/07 8:06 AM

utah.gov

SRR4PO1.SRDOMAIN	Delivered	07/17/07 5:23 PM
AJROGERS (A J Rogers)	Opened	07/18/07 8:12 AM
	Emptied	07/18/07 8:14 AM
	Deleted	07/18/07 8:14 AM
	Forwarded	07/19/07 3:36 PM
	Replied	07/23/07 1:48 PM
	Deleted	07/23/07 1:49 PM
ANNEOGDEN (Anne Ogden)	Opened	07/17/07 5:23 PM
	Replied	07/26/07 2:28 PM
BSORENSON (Bret Sorenson)	Opened	07/18/07 9:31 AM
	Emptied	07/18/07 9:31 AM
CLARKMACKAY (Clark Mackay)	Opened	07/18/07 9:10 AM
	Emptied	07/26/07 10:30 AM
	Deleted	07/26/07 10:30 AM
DBABCOCK (Dave Babcock)	Opened	07/18/07 8:00 AM
	Deleted	07/30/07 3:04 PM
DHAWKS CC (Dal Hawks)	Opened	07/19/07 8:37 AM
HKIRKHAM (Hugh Kirkham)	Opened	07/17/07 5:38 PM
	Forwarded	07/27/07 4:19 PM
LHENRIE (Les Henrie)	Opened	07/17/07 5:25 PM
LSLACK (Layne Slack)	Opened	07/18/07 7:36 AM
MMILES (Mike Miles)	Opened	07/17/07 5:41 PM
	Forwarded	07/19/07 11:10 AM
NMERRILL (Nathan Merrill)	Downloaded	07/18/07 8:01 AM
	Opened	07/18/07 8:05 AM
	Replied	07/18/07 8:37 AM
PMCGANN (Patrick McGann)	Opened	07/20/07 10:35 AM
RDOWELL (Robert Dowell)	Opened	07/18/07 3:48 PM
RNEBEKER (Robert Nebeker)	Opened	07/18/07 8:33 AM
	Deleted	07/18/07 8:33 AM
RSCHENA (Ree Schena)	Opened	07/18/07 6:48 AM
	Deleted	07/18/07 4:46 PM
	Emptied	07/23/07 2:52 PM
RTORGERSON (Rick Torgerson)	Opened	07/17/07 7:47 PM
SCOTTMUNSON (Scott Munson)	Opened	07/30/07 10:02 AM
	Emptied	07/30/07 11:27 AM
SOGDEN (Steve Ogden)	Opened	07/18/07 5:56 AM
TTORGERSEN (Troy Torgersen)	Opened	07/18/07 7:05 AM

utah.gov

SRTCPO1.SRDOMAIN	Delivered	07/17/07 5:23 PM
DANIELLEHERRSCHER (Danielle Herrscher)	Opened	07/17/07 7:14 PM
DKINNECOM (Dave Kinnecom)	Opened	07/17/07 6:20 PM
EBRONDUM (Erik Brondum)	Emptied	08/01/07 10:22 AM
ERASBAND (Eric Rasband)	Opened	07/18/07 6:21 AM
	Deleted	07/18/07 6:22 AM

ROBERTCLAYTON (Rob Clayton)	Opened	07/17/07 7:02 PM
TLPETERSON (Troy Peterson)	Replied	07/17/07 5:23 PM
	Opened	07/23/07 11:09 AM
utah.gov	Transferred	07/17/07 5:24 PM
BCHRISTENSEN (Brent Christensen)		

Post Office	**Delivered**	**Route**
		civilscience.com
		dot.gov
		gcinc.com
SRCOPO1.SRDOMAIN	07/17/07 5:23 PM	utah.gov
SRR1PO1.SRDOMAIN	07/17/07 5:23 PM	utah.gov
SRR2PO1.SRDOMAIN	07/17/07 5:23 PM	utah.gov
SRR3PO1.SRDOMAIN	07/17/07 5:23 PM	utah.gov
SRR4PO1.SRDOMAIN	07/17/07 5:23 PM	utah.gov
SRTCPO1.SRDOMAIN	07/17/07 5:23 PM	utah.gov
		utah.gov

Files	**Size**	**Date & Time**
MESSAGE	1354	Tuesday, July 17, 2007 5:23 PM
Proposed changes GW 1 & SN 7.pdf	7092	Tuesday, July 17, 2007 5:17 PM
GW 1A,1B & SN 7A, 7B 7-17-07.pdf	374009	Tuesday, July 17, 2007 5:01 PM

Options

Auto Delete:	No
Expiration Date:	None
Notify Recipients:	Yes
Priority:	Standard
ReplyRequested:	No
Return Notification:	
Send Notification when Opened	
Send Notification when Deleted	
Concealed Subject:	No
Security:	Standard
To Be Delivered:	Immediate
Status Tracking:	All Information

GW 1A, GW 1B and SN 7A, SN 7B
Proposed Standard Drawing Changes

GW 1A:

1. Moved raised island detail to new standard drawing GW 1B.
2. Added drawing with crosswalk.
3. Show raised island set back with crosswalk and with out crosswalk.
4. Changed arrows in traffic lane to be the same as new standard drawing TC 3A.
5. Added notes 1-9.
6. Changed title of standard drawing GW 1 A from raised Island and plowable end section to Raised Island set back.

GW 1B: NEW DRAWING

1. Moved plowable end section details from GW 1 to this drawing.
2. Added detail for slip base detail for raised island.
3. Notes 1-3

SN 7A:

1. SN 7 was getting congested.
2. Moved Guide & Direction sigh to SN 7B.
3. Added new drawings showing signs over sidewalks.
4. Added notes 1-4.
5. Added drawing showing NP Signs in compliance with the MUTCD.
6. Added Note for parking signs.

SN 7B:

1. Added height and travel lane off set for all signs.
2. Changed route markers to be in compliance with the MUTCD.
3. Changed Beehive.
4. Changed 2” to 2” max.
5. Added detail on installing signs on barrier.
6. Added 9’ height on barrier detail.

Standard Drawing/Specification Review Sheet		Review Comments		
STD DWG/Spec Number	**GW 1A, GW 1B, SN 7A, SN 7B**	Sheet 1	of	13
Date:	August 2007	Facilitator:	John Leonard	

Review Comments Form

Item No.	Reviewer	Sheet/Section No.	Comment	Review Mtg. Action	Final Action.
1	Todd Richins, R-2 Maint.	GW 1B	**I could not see any thing to comment on other than a possible type error on the Plowable end section detail (GW 1B), where it talks about the raised island detail sheet at the top left hand corner of the page, should it be listed as a Type M2 curb instead of N2? Thank you for keeping us informed.**	A	A
			Response: Error corrected		
2	Kris Peterson, R-2 Traffic.	GW 1A	**Note 2. spelling "Detail son standard" Title has not been changed.**	A	A
			Response: Error Corrected, Title Changed		
3	Kris Peterson, R-2 Traffic.	GW 1B	**We have found that a full depth (to bottom of blockout) 1/4" drainage groove (or sawcut) placed at the narrowest point of the curb at the blockout for the slip-base installation is needed for freeze thaw and water drainage. I recommend including that in the detail. We have been requiring it's installation for the past few years and have had good success.**	B	C
			Response: Saw cuts tend to clog, the gap needed to be wider or deleted. Committee chose to delete the gap rather than create a snag point.		
4	Kris Peterson, R-2 Traffic.	SN 7A	**No comment**	A	A
			Response:		

Action Code	A	B	C	D
	Submitter will Comply	**Submitter to Evaluate**	**Delete Comment**	**Others to Evaluate**

Standard Drawing/Specification Review Sheet		Review Comments		
STD DWG/Spec Number	**GW 1A, GW 1B, SN 7A, SN 7B**	Sheet 2	of	13
Date:	August 2007	Facilitator:	John Leonard	

Item No.	Reviewer	Sheet/Section No.	Comment	Review Mtg. Action	Final Action.
5	Kris Peterson, R-2 Traffic.	SN7B	**Top right detail, CZ should be measured from the edge of travel lane, rather than edge of shoulder. Also the drawing shows two different "desireable" offsets. Which is most desireable? Is the 6' dimension the absolute minimum?**	A	A
			Response: Offset corrected and clarified		
6	Kris Peterson, R-2 Traffic.	SN7B	**Route Sign Detail, the dimension between signs is 2" max. Is 0" acceptable?**	B	C
			Response: Yes, 0” is less than 2” Max.		
7	Kris Peterson, R-2 Traffic.	SN7B	**Shoulder barrier mount detail, is the 2' dimension to sign from barrier face from the toe of the barrier or should it be measured from the top of the face? I recommend that it be from the top.**	B	C
			Response: Measurement is from the toe of the barrier.		
8	Kris Peterson, R-2 Traffic.	SN7B	**Is there a NCHRP bracket that will work with the "bullhorn" attachment method? I have not seen one and am not sure it is needed since the sign is placed behind barrier on the should mount scenario and subsequently outside the clearzon**	A	A
			Response: Removed reference to 350 bracket. Will develop a new drawing for the bracket detail.		
9	Betty Purdie, R-2 Const/Maint Engineer	GW 1A	**Note 2 has a typo - detail son**	A	A
			Response: Error Corrected.		

Action Code	A	B	C	D
	Submitter will Comply	**Submitter to Evaluate**	**Delete Comment**	**Others to Evaluate**

Standard Drawing/Specification Review Sheet		Review Comments		
STD DWG/Spec Number	**GW 1A, GW 1B, SN 7A, SN 7B**	Sheet 3	of	13
Date:	August 2007	Facilitator:	John Leonard	

Item No.	Reviewer	Sheet/Section No.	Comment	Review Mtg. Action	Final Action.
10	Betty Purdie, R-2 Const/Maint Engineer	GW 1B	**The dimensions shown for the slip base differ between the 2 curb types 12", 12"min - 18" max. Why?**	B	C
			Response: The width of the two islands is different when placed back-to-back. There would not be sufficient concrete if the B5 curb were allowed to have an 18" diameter sleeve.		
11	Betty Purdie, R-2 Const/Maint Engineer	SN 7A	**It would be helpful to have a detail for signs that go in a sidewalk (6' - 8' sidewalk with no ROW behind it)**	A	A
			Response: Added notes for this situation.		
12	Betty Purdie, R-2 Const/Maint Engineer	SN 7B	**Barrier mounts: ** states min. distance reduced for 4' by 4' diamond sign - how much?**	A	A
			Response: Added a 4'x4' diamond shape to detail and clarified dimensions.		
13	Betty Purdie, R-2 Const/Maint Engineer	SN 7B	**Multiple support signs: center label over detail, offset dimensions are shown from edge of traveled way and from edge of shoulder - this is confusing and the information seems to be contradictory**	A	A
			Response: Label centered, clarified dimensions		
14	Betty Purdie, R-2 Const/Maint Engineer	SN 7B	***** note is not clear, part of information of note is on drawing and then continues onto the note - could easily be misunderstood.**	A	A
			Response: Clarified notes and detail call outs.		
15	Robert Westover, R-3	General	**No comments.**	A	A
			Response:		

Action Code	A	B	C	D
	Submitter will Comply	**Submitter to Evaluate**	**Delete Comment**	**Others to Evaluate**

Standard Drawing/Specification Review Sheet		Review Comments		
STD DWG/Spec Number	**GW 1A, GW 1B, SN 7A, SN 7B**	Sheet 4	of	13
Date:	August 2007	Facilitator:	John Leonard	

Item No.	Reviewer	Sheet/Section No.	Comment	Review Mtg. Action	Final Action.
16	Nathan Merrill, R-4	General	**No comments.**	A	A
			Response:		
17	Joe Kammerer, R-2, PM	General	**No comments.**	A	A
			Response:		
18	Brent Schvaneveldt, R-3 PM	General	**No comments.**	A	A
			Response:		
19	Robert Markle, R-3 Traffic	GW 1A	**GW 1A: Change #6, the title, is not reflected.**	A	A
			Response: Error corrected		
20	Rich Clarke, Engineer for Maintenance	General	**No comments.**	A	A
			Response:		
21	Mont Wilson, AGC	General	**Called when no written response. Mont returned call and indicated that he saw no issues that would affect the AGC members at this time.**	A	A
			Response:		
22	Bret Sorenson, R-4	General	**No comments.**	A	A
			Response:		
23	Kevon Ogden, R-2 Area Spervison	General	**No Comments.**	A	A
			Response:		
24	Scott Andrus, R-3 Construction	General	**No Comments.**	A	A
			Response:		

Action Code	A	B	C	D
	Submitter will Comply	**Submitter to Evaluate**	**Delete Comment**	**Others to Evaluate**

Standard Drawing/Specification Review Sheet		Review Comments		
STD DWG/Spec Number	**GW 1A, GW 1B, SN 7A, SN 7B**	Sheet 5	of	13
Date:	August 2007	Facilitator:	John Leonard	

Item No.	Reviewer	Sheet/Section No.	Comment	Review Mtg. Action	Final Action.
25	Steve Odgen, R-4	SN 7A	**Is there a minimum offset for the edge of a sign adjacent to sidewalk in a planter strip, that the sign should be installed at 7' instead of 6'? Maybe a dimension could be added to detail "W/Curb & Gutter" that shows minimum distance to sidewalk.**	B	C
			Response: Only when installed over sidewalk.		
26	Steve Odgen, R-4	SN 7B	**Note 1 "Place 6 feet behind face" of what?**	A	A
			Response: Clarified		
27	Rob Wight, R-2 Design	General	**No Comments.**	A	A
			Response:		
28	Anne Ogden, R-4 Traffic	GW 1A	**Reword Note 1: "See Std Dwg GW 1B for curb detail."**	A	A
			Response: Reworded		
29	Anne Ogden, R-4 Traffic	GW 1A	**Reword Note 2 to be similar to note 3. (i.e. "See Std Dwg ST 4 for Standard Crosswalk, Stop and Yield line markings.")**	A	A
			Response: Reworded		
30	Anne Ogden, R-4 Traffic	GW 1A	**Reword Note 4 for consistency: "See Std Dwg GW 1B for plowable end section and hole details."**	A	A
			Response: Reworded		
31	Anne Ogden, R-4 Traffic	GW 1A	**Arrows across the end section for the "1' MAX" dimension are hard to see in both details**	A	A
			Response: Relocated arrows o both details		

Action Code	A	B	C	D
	Submitter will Comply	**Submitter to Evaluate**	**Delete Comment**	**Others to Evaluate**

Standard Drawing/Specification Review Sheet		Review Comments		
STD DWG/Spec Number	**GW 1A, GW 1B, SN 7A, SN 7B**	Sheet 6	of	13
Date:	August 2007	Facilitator:	John Leonard	

Item No.	Reviewer	Sheet/Section No.	Comment	Review Mtg. Action	Final Action.
32	Anne Ogden, R-4 Traffic	GW 1A	**Title of sheet hasn't been changed as listed in the proposed changes summary.**	A	A
			Response: Error corrected		
33	Anne Ogden, R-4 Traffic	GW 1B	**Where are the specifications for the sleeve that may be placed in the island?**	B	C
			Response: Any material may be used to create the sleeve—it is temporary formwork.		
34	Anne Ogden, R-4 Traffic	GW 1B	**Do the two dashed lines in each "raised island detail" represent the outsides of the hole shown in the slipbase detail? Are the '12" MIN, 18" MAX DIAMETER' and '12" DIA' callouts supposed to be dimensioning the hole? Maybe add an A-A cross-section line to clarify this, since it was pretty confusing. Also, be consistent with the DIA vs DIAMETER callouts. And is the '12" DIA' callout on the B5 curb a MAX or a MIN or just a finite dimension?**	A	A
			Response: Modified and clarified callouts.		
35	Anne Ogden, R-4 Traffic	GW 1B	**Are the 4 little circles on the slipbase detail the pins/dowels? Should they be labeled?**	A	A
			Response: Clarified that they are typical rebar placments.		
36	Anne Ogden, R-4 Traffic	GW 1B	**B**	C	A
			Response: See Std Dwg SN 11 for those details.		

Action Code	A	B	C	D
	Submitter will Comply	**Submitter to Evaluate**	**Delete Comment**	**Others to Evaluate**

Standard Drawing/Specification Review Sheet		Review Comments		
STD DWG/Spec Number	**GW 1A, GW 1B, SN 7A, SN 7B**	Sheet 7	of	13
Date:	August 2007	Facilitator:	John Leonard	

Item No.	Reviewer	Sheet/Section No.	Comment	Review Mtg. Action	Final Action.
37	Anne Ogden, R-4 Traffic	GW 1B	**Should the rebar pins/dowels be labeled? Are the lengths/embedment depths the same as on GW 2?**	A	A
			Response: Clarified reference		
38	Anne Ogden, R-4 Traffic	GW 1B	**In note 1, why is the word "typically" in there? Is there an instance when the raised island wouldn't be two curbs placed back-to-back?**	B	C
			Response: Many times the curbs are separated to create a wider island.		
39	Anne Ogden, R-4 Traffic	GW 1B	**Note 2: "cannot" is one word, not two**	A	A
			Response: Spelling corrected		
40	Anne Ogden, R-4 Traffic	GW 1B	**On the plowable end section details, extend the arrows on the "Plowable End Section" labels.**	B	C
			Response:		
41	Anne Ogden, R-4 Traffic	GW 1B	**Label the surfacing layer (similar to the UTBC label) on the plowable end section details?**	B	C
			Response: Surfacing layer properly referenced.		
42	Anne Ogden, R-4 Traffic	GW 1B	**On the bottom right callout "top of surfacing"), shift the left arrow to not point to the intersection of the dashed line and the dimension line.**	A	A
			Response: Line relocated		
43	Anne Ogden, R-4 Traffic	GW 1B	**Show a solid line on the top of the B5 plowable end section detail to show the joint between the two sections. Also, add another arrow from the "Concrete curb type B5" to show that there are 2 curb sections (similar to the M2 callout on the other detail).**	A	A

Action Code	A	B	C	D
	Submitter will Comply	**Submitter to Evaluate**	**Delete Comment**	**Others to Evaluate**

Standard Drawing/Specification Review Sheet		Review Comments		
STD DWG/Spec Number	**GW 1A, GW 1B, SN 7A, SN 7B**	Sheet 8	of	13
Date:	August 2007	Facilitator:	John Leonard	

Item No.	Reviewer	Sheet/Section No.	Comment	Review Mtg. Action	Final Action.
			Response: Centered section line.		
44	Anne Ogden, R-4 Traffic	SN 7A	**Why not make "parking signs" comment a numbered note?**	A	A
			Response:		
45	Anne Ogden, R-4 Traffic	SN 7A	**In "parking signs" comment, add a comma after "used".**	A	A
			Response:		
46	Anne Ogden, R-4 Traffic	SN 7A	**What's the difference between supplemental plaques and supplemental signs? Is the difference in the minimum mounting height based on the height of the supplemental sign?**	A	A
			Response: No difference—changed note.		
47	Anne Ogden, R-4 Traffic	SN 7B	**Reword "***" note (on the top left): "With 12' Min overall paved shoulder, CZ desirable" (As it exists, *desirable* is spelled wrong.)**	A	A
			Response: Note reworded.		
48	Jared Beard, R-4	SN 7B	**In top left detail, change "travel line" to "travelled way" for consistency.**	A	A
			Response: Changed.		
49	Jared Beard, R-4	SN 7B	**Add "Auxiliary" after "Directional Arrow" on "Route Signs" detail.**	A	A
			Response: Added.		
50	Jared Beard, R-4	SN 7B	**"**" note in the center on the right: minimum distance is reduced to what? Does it need to be specified? Does the distance the vertical portion of the pole is away from the barrier need to be specified?**	A	A
			Response: Fixed.		

Action Code	A	B	C	D
	Submitter will Comply	**Submitter to Evaluate**	**Delete Comment**	**Others to Evaluate**

Standard Drawing/Specification Review Sheet		Review Comments		
STD DWG/Spec Number	**GW 1A, GW 1B, SN 7A, SN 7B**	Sheet 9	of	13
Date:	August 2007	Facilitator:	John Leonard	

Item No.	Reviewer	Sheet/Section No.	Comment	Review Mtg. Action	Final Action.
51	Jared Beard, R-4	SN 7B	**The table is slightly confusing, since it's only the width that changes -- the height stays constant (36" for freeway & expressway and 24" for conventional). Maybe change the title to "Route signs min. width" or say 36"x36", 45"x36", 24"x24", and 30"x24" for the sizes.**	A	A
			Response: Table updated.		
52	Jared Beard, R-4	SN 7B	**Note 4 has a typo: height**	A	A
			Response: Error corrected.		
53	Tyler Yorgason, ACEC	SN 7B	**Note 6: move the hyphen from between NCHRP and 350 to between 350 and approved (i.e. NCHRP 350-approved), if the proper nomenclature is "NCHRP 350" (without a hyphen)**	B	C
			Response: Note 6 removed.		
54	Anne Ogden, R-4 Traffic	SN 7B	**Add a period at the end of Note 6.**	B	C
			Response: Note 6 removed.		
55	Jared Beard, R-4	**GW 1A**	**Why is the dimension from the yellow paint line to the median island listed as 1' Max? Is it acceptable to have island right against the paint line? Showing the dimension as 1' implies that anything less than 1' is acceptable. Does the shy distance of 2' apply to median islands? If it does apply should this dimension be 2' min?**	B	C
			Response: It is listed as a maximum, not a minimum. The island can be painted, but it is supplemental to the edge line.		

Action Code	A	B	C	D
	Submitter will Comply	**Submitter to Evaluate**	**Delete Comment**	**Others to Evaluate**

Standard Drawing/Specification Review Sheet		Review Comments		
STD DWG/Spec Number	**GW 1A, GW 1B, SN 7A, SN 7B**	Sheet 10	of	13
Date:	August 2007	Facilitator:	John Leonard	

Item No.	Reviewer	Sheet/Section No.	Comment	Review Mtg. Action	Final Action.
56	Jared Beard, R-4	**GW 1B**	**On the Raised Island Detail (Type M2 Curb) why do we list the hole drilled for the post as 12" min 18" max? Shouldn't this just be installed as a P4 signpost per Standard Drawing SN 11 with a 12 " diameter concrete footing that is placed to a depth of 42"**	B	C
			Response: The hole is for the accessing of the slip base, not the installation of the foundation, SN 11 covers that detail.		
57	Jared Beard, R-4	**GW 1B**	**Is there an approved "sleeve" that can be place in the island? The drawing seems to suggest there is but SN 11 does not show a sleeve.**	B	C
			Response: Any material may be used to create the sleeve—it is temporary formwork.		
58	Jared Beard, R-4	**GW 1B**	**Somewhere on the drawing it should be made clear that a "slipbase" refers to a sign post type P4. Maybe the title can be changed to Slipbase (Sign Post Type P4) Detail for Raised Island.**	A	A
			Response: Modified Note 4		
59	Jared Beard, R-4	**GW 1B**	**A note should be added referring the contractor to SN 11 for directions on installing the P4 sign post.**	A	A
			Response: Modified Note 4.		
60	Jared Beard, R-4	**SN 7A**	**When a sign is place adjacent to a sidewalk, is it necessary to provide any lateral clearance between the sidewalk and the sign post?**	B	C
			Response: Not when the sign is adjacent to the sidewalk. Vertical clearance is the issue for ADA		

Action Code	A	B	C	D
	Submitter will Comply	**Submitter to Evaluate**	**Delete Comment**	**Others to Evaluate**

Standard Drawing/Specification Review Sheet		Review Comments		
STD DWG/Spec Number	**GW 1A, GW 1B, SN 7A, SN 7B**	Sheet 11	of	13
Date:	August 2007	Facilitator:	John Leonard	

Item No.	Reviewer	Sheet/Section No.	Comment	Review Mtg. Action	Final Action.
61	Jared Beard, R-4	**SN 7B**	**Clear Zone is shown as CZ on the drawing. It should be spelled out. Is it even appropriate to use the word clear zone. We are really referring to a horizontal clearance to the sign or sign post not clear zone. This drawing implies that you cannot have a sign in the clear zone which is not accurate. ize based upon the MUTCD?**	B	C
			Response: The clear zone location is desired, but not required.		
62	Jared Beard, R-4	**SN 7B**	**If posts are breakaway is the 12' "desirable clearance" required. The word desirable implies that the contractor can move the sign closer to the road. Is this the message we want to convey with this drawing. Should be say 12' minimum clearance required instead?**	B	C
			Response: Left note as is—believe it is clear.		
63	Jared Beard, R-4	**SN 7B**	**There is a table on the drawing titled "Route Signs Min. Size". This table is confusing. For a 1 or 2 digit sign the sign is a square with the dimension listed. For a 3 digit sign the sign is a rectangle. The width and height should both be listed for the signs in this table to avoid confusion. Dimensioning the signs with an A and B dimension and listing the dimension in the table may be one way to clear up any confusion.**	A	A
			Response: Table revised.		

Action Code	A	B	C	D
	Submitter will Comply	**Submitter to Evaluate**	**Delete Comment**	**Others to Evaluate**

Standard Drawing/Specification Review Sheet		Review Comments		
STD DWG/Spec Number	**GW 1A, GW 1B, SN 7A, SN 7B**	Sheet 12	of	13
Date:	August 2007	Facilitator:	John Leonard	

Item No.	Reviewer	Sheet/Section No.	Comment	Review Mtg. Action	Final Action.
64	Jared Beard, R-4	**SN 7B**	**Does the size of the auxiliary signs need to be identified in a table or will be just leave it up to the designer to determine the size based upon the MUTCD?**	B	C
			Response: Individual design rules—the standards drawings provide guidance for the intent and design of general elements.		
65	Jared Beard, R-4	All	**Comments provided on plan sheet markups**	A	A
			Response: Various comments accepted.		
66	Tyler Yorgason, ACEC	GW 1A	**Fix typo on note 2 GW 1A**	A	A
			Response: Error corrected		
67	Tyler Yorgason, ACEC	GW 1A	**GW 1A shows a dimension of 1' MAX between the 4' solid yellow line and the raised median island. Is there a minimum dimension allowed? Is the solid yellow line required or can the curb be painted yellow?**	B	C
			Response: It is listed as a maximum, not a minimum. The island can be painted, but it is supplemental to the edge line.		
68	Tyler Yorgason, ACEC	GW 1B	**GW 1B Note 2 - maybe this should be in active voice**	A	A
			Response: Reworded.		
69	Tyler Yorgason, ACEC	GW 1B	**GW 1B: The Raised Island Detail for the Type B5 Curb shows a 12" diameter sleeve in the back to back curb. This leaves only 3" of concrete on either side of the hole. Is this adequate to maintain its integrity?**	B	C

Action Code	A	B	C	D
	Submitter will Comply	**Submitter to Evaluate**	**Delete Comment**	**Others to Evaluate**

Standard Drawing/Specification Review Sheet		Review Comments		
STD DWG/Spec Number	**GW 1A, GW 1B, SN 7A, SN 7B**	Sheet 13	of	13
Date:	August 2007	Facilitator:	John Leonard	

Item No.	Reviewer	Sheet/Section No.	Comment	Review Mtg. Action	Final Action.
			Response: We believe this is adequate since this is a spot, not a section of narrow concrete.		
70	Tyler Yorgason, ACEC	SN 7B	**Note 6 - Where can I find a description of the NCHRP 350 approved bracket? Is the median or shoulder barrier mounted sign and post not an issue with respect to meeting NCHRP 350, just the bracket?**	A	A
			Response: Reference to 350 bracket eliminated—new drawing will be developed to show bracket details.		
71	Tyler Yorgason, ACEC	SN 7B	**It seems we should consider detailing the bracket requirements on the drawing instead of referencing "350 approved"**	A	A
			Response: New drawing being developed.		
72	Tyler Yorgason, ACEC	SN 7B	**Note 5 - is a 17 foot mounting height with a sign over four feet in width feasible with a median barrier mounted bracket?**	B	C
			Response: Yes.		
73	Tyler Yorgason, ACEC	SN 7B	**If the 2' MIN distance from the front of the barrier is maintained, can sign widths exceed the 4' maximum shown? Is the limitation related to the type of mounting bracket used?**	A	A
			Response: A specific design would be required. Drawing is intended to show general design elements.		
74					
			Response:		

Action Code	A	B	C	D
	Submitter will Comply	**Submitter to Evaluate**	**Delete Comment**	**Others to Evaluate**

ISLAND WITHOUT CROSSWALK, STOP OR YIELD LINE

DETAIL GW 1A-1

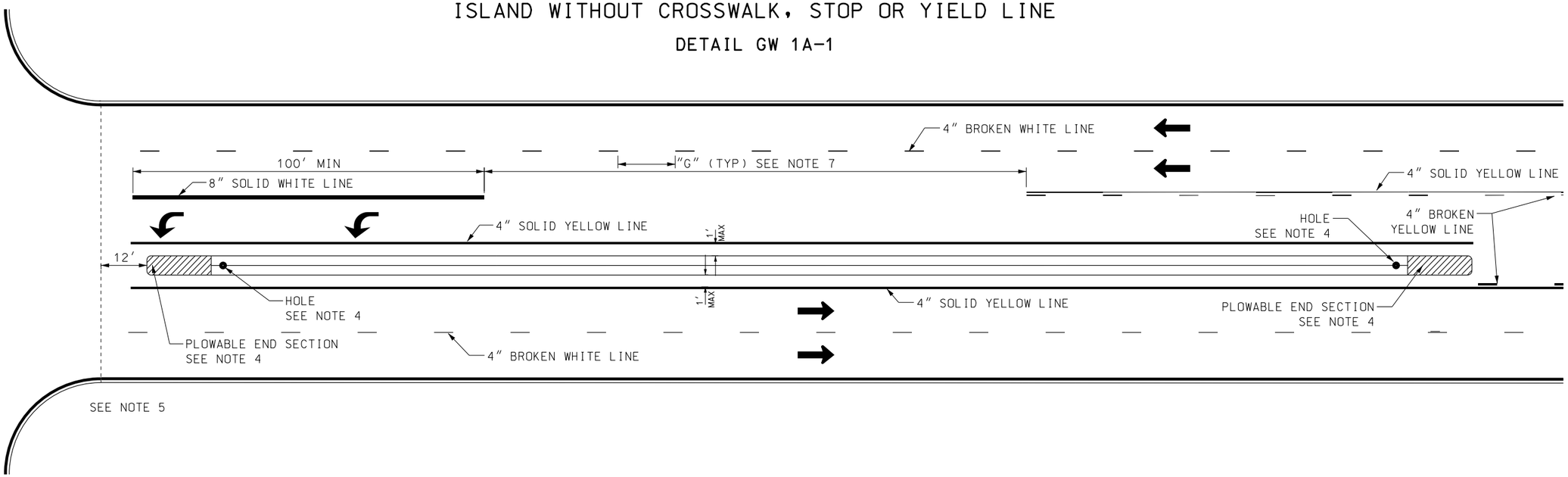

ISLAND WITH CROSSWALK, STOP OR YIELD LINE

DETAIL GW 1A-2

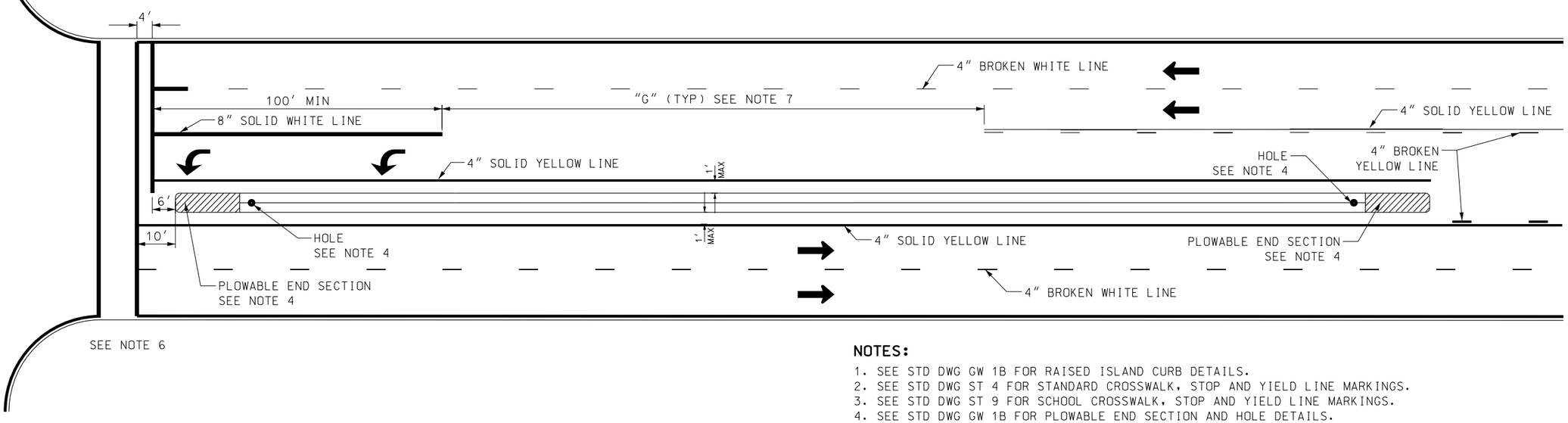

NOTES:

1. SEE STD DWG GW 1B FOR RAISED ISLAND CURB DETAILS.
2. SEE STD DWG ST 4 FOR STANDARD CROSSWALK, STOP AND YIELD LINE MARKINGS.
3. SEE STD DWG ST 9 FOR SCHOOL CROSSWALK, STOP AND YIELD LINE MARKINGS.
4. SEE STD DWG GW 1B FOR PLOWABLE END SECTION AND HOLE DETAILS.
5. PLACE ISLAND IN RELATION TO PC/PT OF CURB SHOULDER.
6. PLACE ISLAND IN RELATION TO CROSSWALK, STOP OR YIELD LINE.
7. G = 90' FOR SPEEDS 40 MPH AND BELOW
   G = 120' FOR SPEEDS 40 TO 50 MPH
   G = 180' FOR SPEEDS 50 MPH AND ABOVE
8. LENGTH OF ISLAND DETERMINED BY REGION TRAFFIC ENGINEER.
9. SEE STD DWG ST 5 FOR PAVEMENT MARKING ISLAND DETAILS.

REVISIONS

NO.	DATE	APPR.	REMARKS
1	08/30/07	JL	SPLIT GW1, CHANGED TITLE, SHOWED ISLAND SET BACK DETAILS, MOVED OTHER DETAILS TO NEW GW 1B

UTAH DEPARTMENT OF TRANSPORTATION
STANDARD DRAWINGS FOR ROAD AND BRIDGE CONSTRUCTION
SALT LAKE CITY, UTAH

RECOMMENDED FOR APPROVAL — JAN.01,2005 DATE
CHAIRMAN STANDARDS COMMITTEE APPROVED — DATE
DEPUTY DIRECTOR — JAN.01,2005 DATE

STANDARD DRAWING TITLE
RAISED ISLAND

STD DWG
GW 1A

DGN File:G:\Standards&SpecsSection\Standards Committee\MeetingFiles\2007\4-August30,07Mtg\Incoming\GW01A.dgn
14-AUG-2007

RAISED ISLAND DETAIL

TYPE "M2" CURB

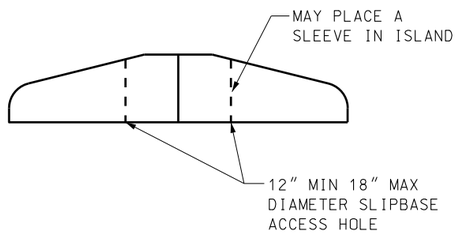

SLIPBASE DETAIL FOR RAISED ISLAND

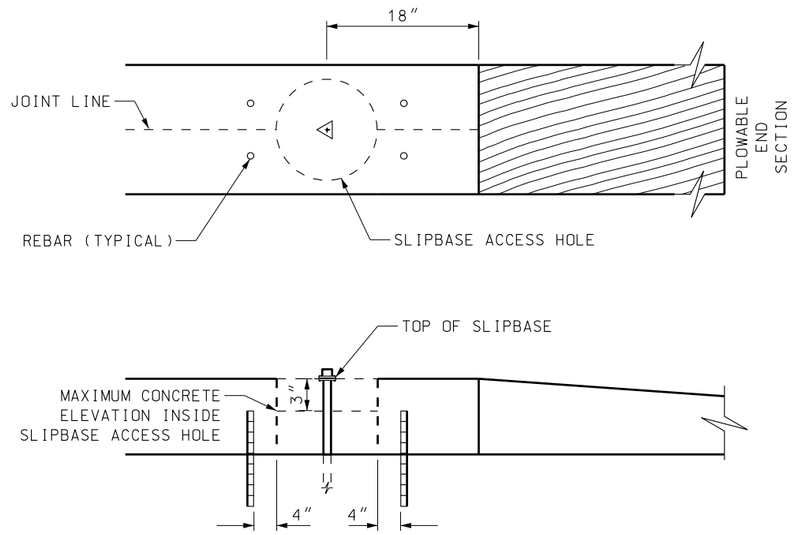

RAISED ISLAND DETAIL

TYPE "B5" CURB

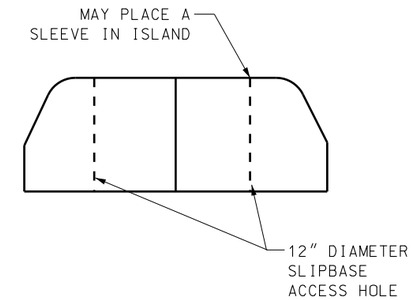

NOTES:

1. RAISED ISLAND IS TWO TYPE M2 OR TYPE B5 CURBS TYPICALLY PLACED BACK-TO-BACK.
2. PLACE TOP OF SLIPBASE STUD POST FLUSH WITH THE TOP OF THE ISLAND, WITH A TOLERANCE OF + 1/8" (CANNOT BE BELOW TOP OF CURB).
3. SEE STD DWG GW 2 FOR M2 AND B5 CURB DETAILS.
4. SEE STD DWG SN 11 FOR SLIPBASE DETAILS.

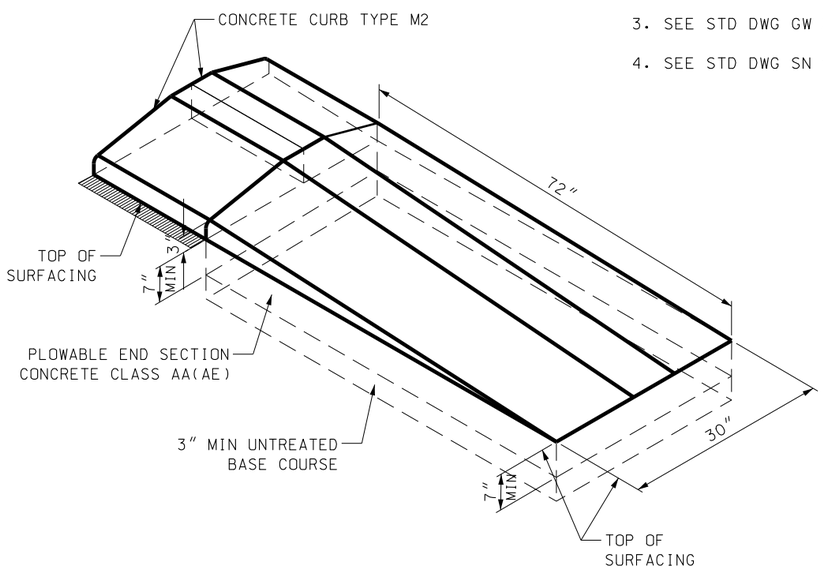

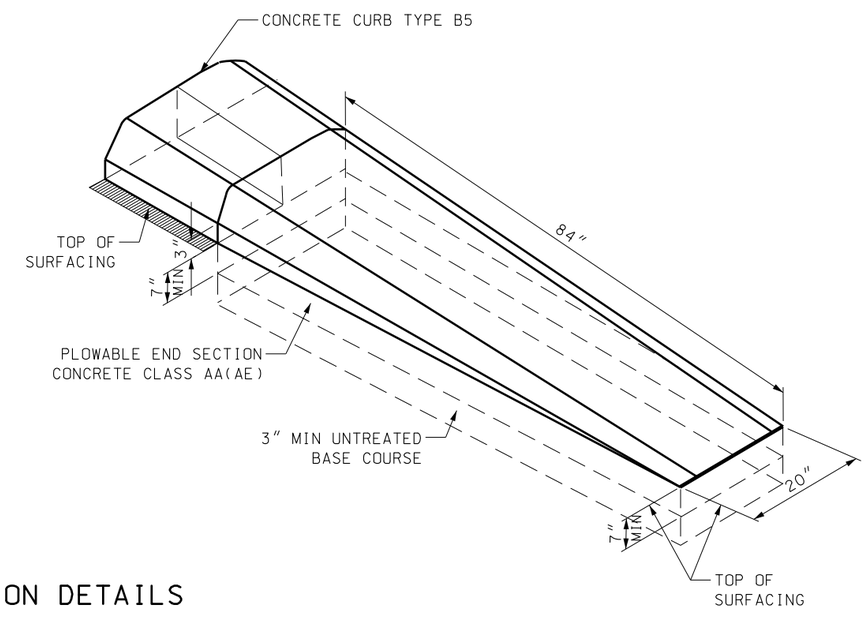

PLOWABLE END SECTION DETAILS

REVISIONS

NO.	DATE	APPR.	REMARKS
1	08/30/07	JL	NEW DRAWING, SPLIT GW1, ADDED DETAILS FOR SLIP BASE IN RAISED ISLAND

UTAH DEPARTMENT OF TRANSPORTATION

STANDARD DRAWINGS FOR ROAD AND BRIDGE CONSTRUCTION

SALT LAKE CITY, UTAH

RECOMMENDED FOR APPROVAL — JAN.01,2005 DATE

CHAIRMAN STANDARDS COMMITTEE APPROVED — JAN.01,2005 DATE

DEPUTY DIRECTOR

RAISED ISLAND AND PLOWABLE END SECTION

STANDARD DRAWING TITLE

STD DWG

GW 1B

DGN File: G:\StandardsandSpecsSection\Standards Committee\MeetingFiles\2007\4-August30,07Mtg\Incoming\GW01B.dgn

14-AUG-2007

SINGLE SUPPORT SIGNS

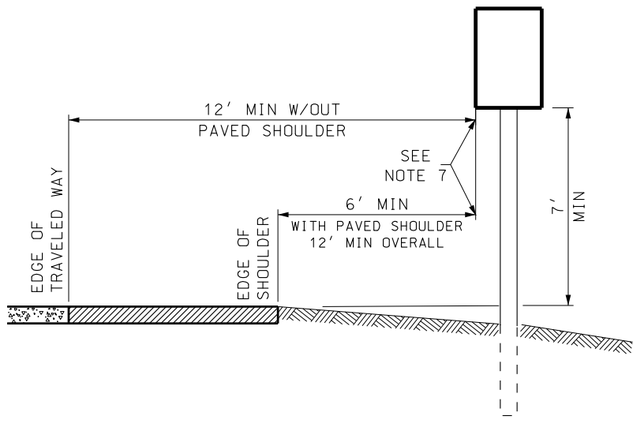

W/O SUPPLEMENTAL SIGN

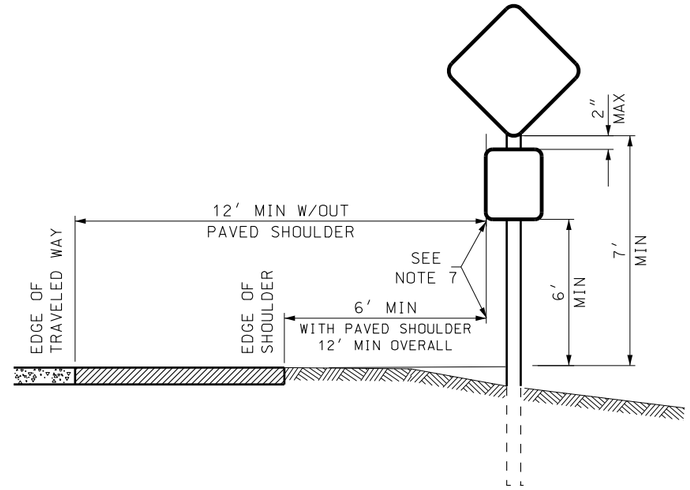

W/SUPPLEMENTAL SIGN

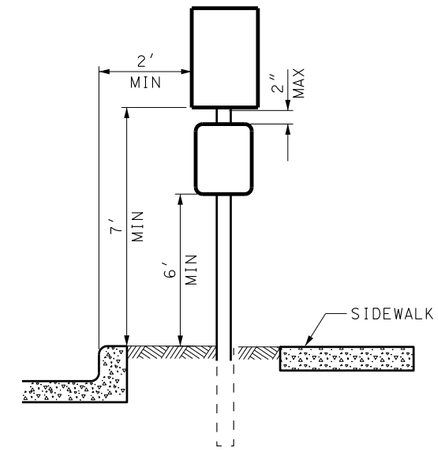

W/CURB & GUTTER

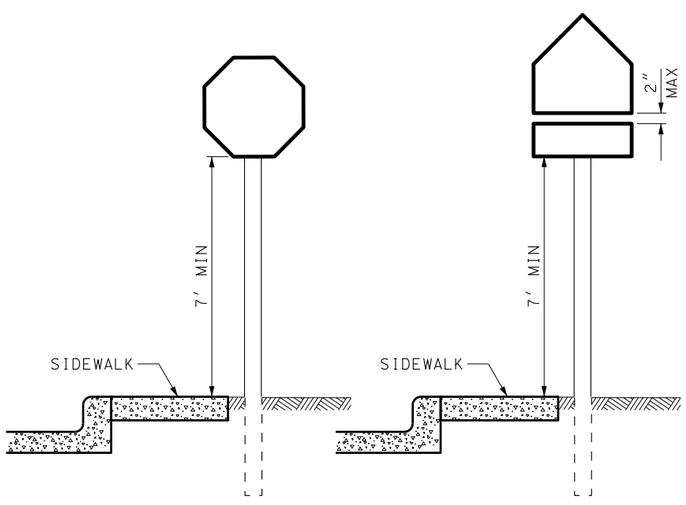

OVER PEDESTRIAN
OR BICYCLE MOVEMENT

SEE NOTE 5

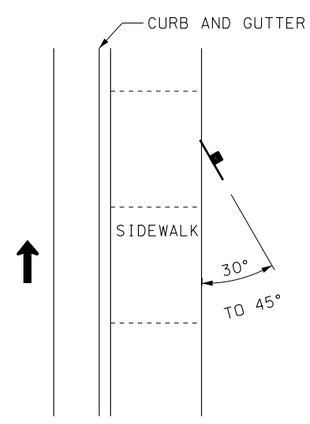

BEHIND
ADJACENT SIDEWALK

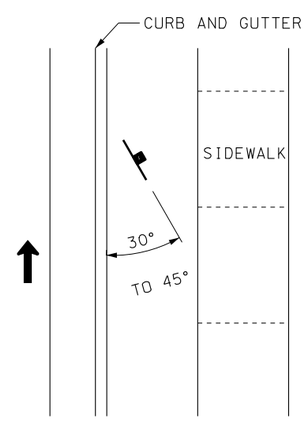

BEHIND
CURB & GUTTER

PARKING SIGNS

SEE NOTE 6

NOTES:

1. MINIMUM MOUNTING HEIGHT FOR SIGN ASSEMBLY IS THE BOTTOM OF THE PRIMARY SIGN WHEN THERE IS NOT A SUPPLEMENTAL SIGN, OR THE BOTTOM OF THE SUPPLEMENTAL SIGN WHEN USED.
2. WHEN SIDEWALK IS ADJACENT TO CURB AND GUTTER, PLACE SIGN BEHIND SIDEWALK AT 7 FOOT MINIMUM HEIGHT.
3. ON CONVENTIONAL ROADS IN RURAL AREAS, MINIMUM SIGN HEIGHT MAY BE REDUCED TO 6 FEET MINIMUM EXCEPT IN LOCATIONS OVER PEDESTRIAN OR BICYCLE MOVEMENTS.
4. SIGN MINIMUM MOUNTING HEIGHT IS SHOWN. MAXIMUM MOUNTING HEIGHT IS 1 FOOT ABOVE MINIMUM MOUNTING HEIGHT.
5. MAINTAIN ADA REQUIREMENTS WHEN INSTALLING SIGN WITHIN SIDEWALK.
6. WHEN PARKING REGULATION SIGNS ARE USED, PLACE SIGNS AT AN ANGLE NOT LESS THAN 30 DEGREES NOR MORE THAN 45 DEGREES WITH THE LINE OF TRAFFIC FLOW IN ORDER TO BE VISIBLE TO APPROACHING TRAFFIC.
7. USE A MINIMUM SIGN OFFSET DISTANCE OF EITHER THE 12′ OFFSET FROM THE EDGE OF THE TRAVELED WAY, OR THE 6′ OFFSET FROM THE EDGE OF THE PAVED SHOULDER, WHICHEVER IS GREATER.

REVISIONS

NO.	DATE	APPR.	REMARKS
1	08/30/07	JL	SPLIT SN 7, ADDED ADA DETAILS, ADDED PARKING SIGN DETAILS, MOVED OTHER DETAILS TO NEW SN 7B

UTAH DEPARTMENT OF TRANSPORTATION
STANDARD DRAWINGS FOR ROAD AND BRIDGE CONSTRUCTION
SALT LAKE CITY, UTAH

RECOMMENDED FOR APPROVAL — JAN.01,2005 DATE
CHAIRMAN STANDARDS COMMITTEE APPROVED — JAN.01,2005 DATE
DEPUTY DIRECTOR

PLACEMENT OF GROUND MOUNT SIGNS

STANDARD DRAWING TITLE

STD DWG
SN 7A

DGN File: G:\StandardsandSpecsSection\Standards Committee\MeetingFiles\2007\4-August30,07Mtg\Incoming\SN07A.dgn
14-AUG-2007

MULTIPLE SUPPORT SIGNS

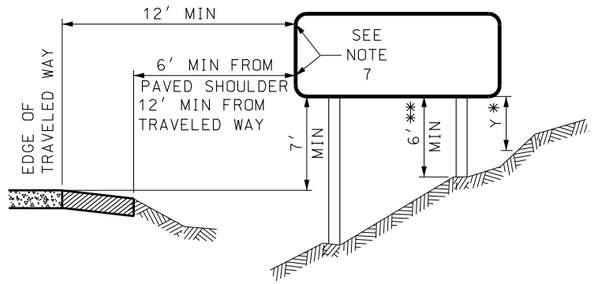

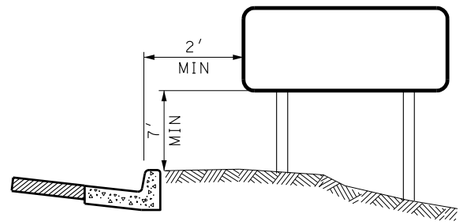

* Y= 3′ MIN GROUND TO ANY POINT OF SIGN PANEL OUTSIDE OF CLEAR ZONE

** 7′ MIN WITHIN CLEAR ZONE

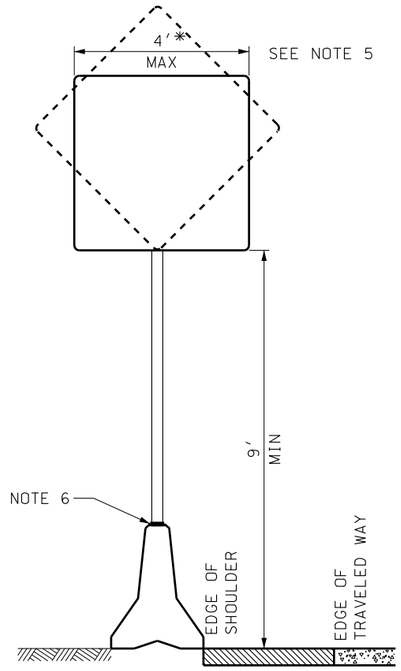

MEDIAN BARRIER MOUNT

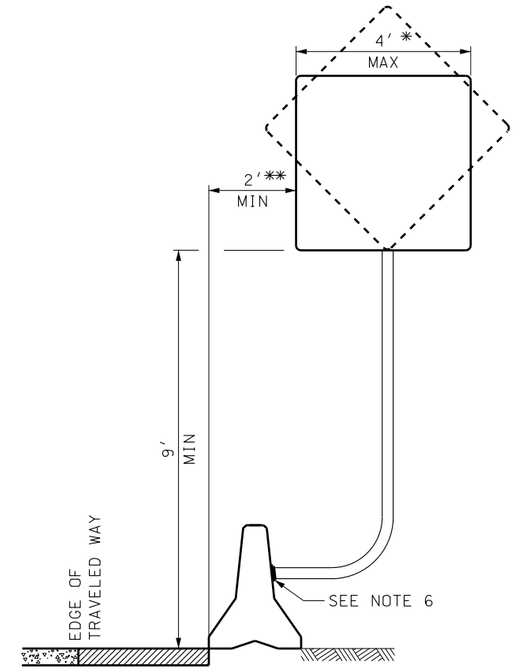

SHOULDER BARRIER MOUNT

* INCLUDES 4′ x 4′ DIAMOND WARNING SIGN

** MINIMUM DISTANCE REDUCED TO 1′ 2″ FOR 4′ x 4′ DIAMOND SIGN

ROUTE SIGNS

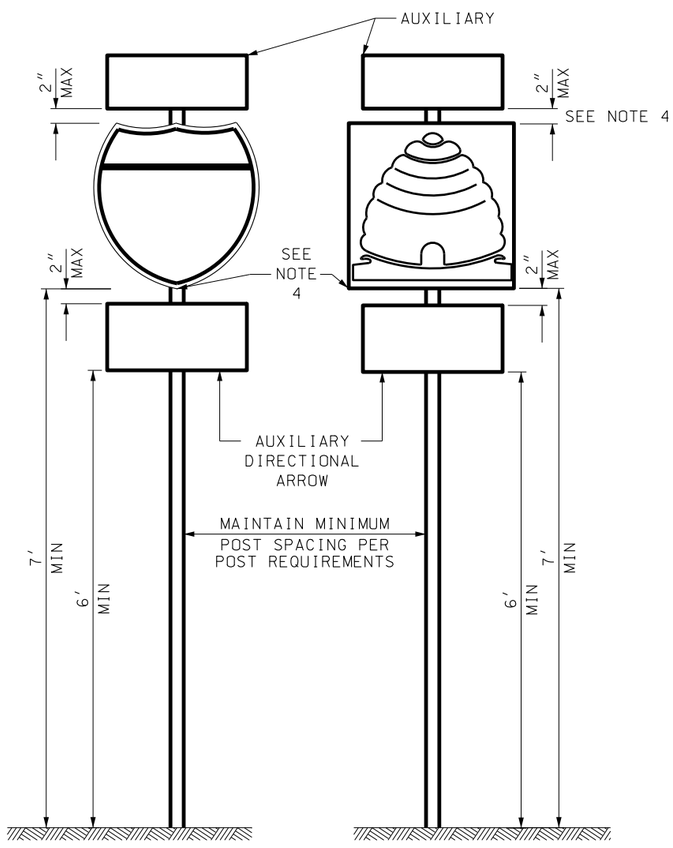

ROUTE SIGNS MIN. SIZE		
	1 & 2 DIGIT	3 DIGIT
FREEWAY & EXPRESSWAY	36″x36″	45″x36″
CONVENTIONAL	24″x24″	30″x24″

NOTES:

1. PLACE SIGNS A MINIMUM OF 6 FEET FROM TRAFFIC FACE OF BARRIER WHEN PLACED BEHIND BARRIER.
2. PLACE SIGNS WITH A 7 FEET MINIMUM MOUNTING HEIGHT WHEN PLACED OVER PEDESTRIAN AND BICYCLE MOVEMENTS.
3. SIGN MINIMUM MOUNTING HEIGHT IS SHOWN. MAXIMUM MOUNTING HEIGHT IS 1 FOOT ABOVE MINIMUM MOUNTING HEIGHT.
4. MOUNT PRIMARY SHIELDS AT SAME HEIGHT.
5. NO LIMIT TO SIGN WIDTH WHEN SIGN MOUNTING HEIGHT IS 17 FEET OR HIGHER.
6. SEE STD DWG SN 7C FOR MEDIAN AND SHOULDER BARRIER MOUNT SIGN MOUNTING BRACKET DETAILS.
7. USE A MINIMUM SIGN OFFSET DISTANCE OF EITHER THE 12′ OFFSET FROM THE EDGE OF THE TRAVELED WAY, OR THE 6′ OFFSET FROM THE EDGE OF THE PAVED SHOULDER, WHICHEVER IS GREATER. USE A SIGN OFFSET EQUAL TO OR EXCEEDING THE CLEAR ZONE WHEREVER PRACTICAL.

REVISIONS

NO.	DATE	APPR.	REMARKS
1	08/30/07	JL	NEW DRAWING, SPLIT OF SN 7, ADDED HEIGHT AND TRAVEL LANE OFFSET, NEW DETAIL FOR BARRIER INSTALLATION

UTAH DEPARTMENT OF TRANSPORTATION
STANDARD DRAWINGS FOR ROAD AND BRIDGE CONSTRUCTION
SALT LAKE CITY, UTAH

RECOMMENDED FOR APPROVAL — JAN.01,2005 DATE
CHAIRMAN STANDARDS COMMITTEE APPROVED — JAN.01,2005 DATE
DEPUTY DIRECTOR

PLACEMENT OF GROUND MOUNT AND BARRIER MOUNT SIGNS

STANDARD DRAWING TITLE

STD DWG
SN 7B

DGN File: O:\StandardsandSpecs\Section\Standards Committee\MeetingFiles\2007\4-August30,07Mtg\Incoming\SN07B.dgn
14-AUG-2007

Standards Committee Submittal Sheet

Name of preparer: Barry Axelrod and Robert Miles
Title/Position of preparer:
Specification/Drawing/Item Title: N/A
Specification/Drawing Number: N/A

Enter appropriate priority level: 4-
(See last page for explanation) **2008**

Sheet not required on editorial or minor changes to standards. Check with Standards Section.

NOTES:

1. All Submittal Sheets must be completed and sent to the Standards and Specifications Section by the Standards Committee suspense date as shown on the Web. (http://www.udot.utah.gov/index.php/m=c/tid=303)
2. The Preparer of the Submittal Sheet or the Standards Committee member (or authorized substitute) responsible for the submittal must be present at the Standards Committee meeting and capable of discussing and answering all questions related to the submittal. The item will be postponed to a later meeting if one of these people is not present.
3. Notify the Standards and Specifications Section immediately of any changes that impact the presentation to include absence of sponsor or delay in presentation.

Complete the following: (Use additional pages as needed.)

A. Why? Detail the reason for changing the Standard (Specification or Drawing), what has initiated a new Standard, or what has caused a new or changed item of interest.

Several specification changes have been reviewed and approved that are more than editorial in nature but not substantial enough for full Standards Committee approval. This method was approved by the Standards Committee during the April 2007 meeting to alleviate a possible backlog of changes in preparation for the 2008 Standards issue.

B. How is Measurement and Payment handled? Existing (from the measurement and payment document), modified, or new measurement and payment to be included with all Standard Specifications or Supplemental Specifications.

None expected at this time, but could be possible. This still fits within the scope of this sub-group.

C. Stakeholder Notification for AGC and ACEC:

By email provide the AGC and ACEC Standards Committee member a copy of all pertinent information relating to the specification or drawing. Detail all responses below. Indicate if no comments were received.

Note: There is a two-week response time set for this item.

Refer to the Standards Committee Web site, Members page at http://www.udot.utah.gov/index.php/m=c/tid=659 for the respective e-mail addresses.

AGC Comments: (Use as much space as necessary.)

N/A

ACEC Comments: (Use as much space as necessary.)

N/A

D. Stakeholders? From the list provided, document the stakeholders contacted, detailing: the company, name of contact, how contacted (by phone, email, hard copy, or in person), concerns, and comments of the change. Stakeholders:

Note: There is a two-week response time set for this item. Allow Stakeholders two weeks to process and respond to coordination requests. All areas should try to complete review and comment as soon as possible but within two weeks.

In-house (for example, preconstruction, materials, construction, safety, design, maintenance) (Include all applicable in-house areas even if not listed above.)

Sub-group consists of Robert Miles, Barry Axelrod, John Butterfield, and an FHWA representative. Others attend as appropriate to present their material.

Construction Engineers

N/A

Contractors (Any additional contacts beyond “C” above.)

N/A

Suppliers

N/A

Consultants (as required) (Any additional contacts beyond “C” above.)

N/A

FHWA (To be accomplished as part of the two-week process before submitting to the Standards and Specifications Section for inclusion on the Standards Committee agenda.) (This is in addition to the requirements of UDOT Policy 08A5-1, procedure 08A5-1.3.)

N/A

Others (as appropriate)

As needed.

E. Other impacted areas, systems, or personnel. (Consider all impacts and possible changes to these areas during the preparation process. Coordinate with all appropriate areas for the respective item. List all impacts and action taken.)

1. Minimum Sampling and Testing Guide (MS&T Guide)

   N/A

2. Business Systems (Electronic Bid System, Project Development Business System, Electronic Program Management, Computer-Aided Drafting and Design, etc.)

   N/A

3. Implementation Plan (Provide detailed instructions on how the subject item will be implemented to include notification of all interested parties and training requirements.)

   Standard publishing procedures.

F. Costs? (Estimates are acceptable.)

1. Additional costs to average bid item price.

   Unknown. May be applicable on a case-by-case basis.

2. Operational (For example, maintenance, materials, equipment, labor, administrative, programming).

   Unknown. May be applicable on a case-by-case basis.

3. Life cycle cost.

   Unknown. May be applicable on a case-by-case basis.

G. Benefits? (Provide details that can be used to complete a Cost – Benefit Analysis.) (Estimates are acceptable.) (If no costs, what is the benefit of making this change?)

Improve wording and flow of specifications. Better standardization of actions.

H. Safety Impacts?

None anticipated.

I. History? Address issues relating to the current usage of the item and past reviews, approvals, or disapprovals.

None

Action Item Update for August 30, 2007 Standards Committee Meeting

(As of August 15, 2007, 1:20 p.m.)

Item 1, Supplemental Specification 01554M, Traffic Control: New target date was set to August 2007 meeting during the April 2007 meeting. From John Leonard: We will incorporate it as requested by the Standards Committee into the Traffic Spec 01554. This will be done in the review and modifications to this spec, before the August deadline. No update received for the meeting.

Item 2, Standard Drawings BA 4E, W-Beam Guardrail Installations and ST 8, Plowable Pavement Markers: Target date no later than October 2007 meeting. No new information. Not due until October.

Item 3, Supplemental Specification 02822, Right of Way Fence and Gate and Supplemental Drawings FG 1A, FG 1B, FG 2 A, and FG 2B: Not approved during April 2007 meeting. Additional work needed to include coordination between Research and Enviromental. Target date no later than October 2007 meeting. On current agenda, Item 2.

Item 4, Supplemental Specification 02735, Micro-Surfacing. Update Sections 02735 and 02789 to meet sampling requirements. Target date August 2007 meeting. No information or files received when requested. Dropped from agenda.

Item 5, Supplemental Specification 02786, Open-Graded Surface Course. Tied to Item 4. Target date August 2007 meeting. No information or files received when requested. Dropped from agenda.

End of Agenda Package