Utah Department of Transportation

Supplemental Drawings for

2008 Standard Specifications

FOR ROAD AND BRIDGE CONSTRUCTION

Issued March 5, 2008

Memorandum

UTAH DEPARTMENT OF TRANSPORTATION

DATE: March 5, 2008

TO: Holders of Hard Copy of Standard Drawings

FROM: Barry Axelrod, CDT
Standards and Specifications

SUBJECT: Supplemental Drawing Distribution, dated March 5, 2008

Applicable files for the change are attached. Maintain these files as a supplemental update to the UDOT Standard Drawings, 2008 Edition. No pages are to be removed or replaced in the basic book, electronic or hard copy.

If you are in need of electronic copies of any Standard or Supplemental Drawing please refer to the Standards and Specifications Web site at http://www.udot.utah.gov/go/standardsandspecifications. From there select the **2008 Standards** subtopic.

If you have any questions or problems with the electronic files contact me at 801-964-4570, 801-631-8828 (cell), or by email at **baxelrod@utah.gov.**

Attachments

STANDARD DRAWINGS INDEX (Supplemental Issue #1, March 5, 2008)
UTAH DEPARTMENT OF TRANSPORTATION

NUMBER	TITLE	CURRENT DATE
	Advanced Traffic Management System (AT)	
AT 1	Legend Sheet	01/01/08
AT 2	Ramp Meter Details	01/01/08
AT 3A	Ramp Meter Sign Panel	01/01/08
AT 3B	Ramp Meter Sign Panel	01/01/08
AT 4	Typical Ramp Meter Signal Head Mounting	01/01/08
AT 5	Ramp Meter Loop Installation	01/01/08
AT 6	Conduit Details	01/01/08
AT 7	Polymer-Concrete Junction Box Details	01/01/08
AT 8	ATMS Cabinet	01/01/08
AT 9	ATMS Cabinet Disconnect And Transformer Frame	01/01/08
AT 10A	CCTV Mounting Details	01/01/08
AT 10B	CCTV Settings	01/01/08
AT 11	CCTV Pole and NID Mounting Details	01/01/08
AT 12	CCTV Pole Foundations For CCTV Pole	01/01/08
AT 13	HAR Pole Detail	01/01/08
AT 14	Weigh In Motion Piezo Details	01/01/08
AT 15	RWIS Site And Foundation Details	01/01/08
AT 16	RWIS Tower Base And Service Pad Layout	01/01/08
AT 17	Ground Rod Installation And Tower Grounding	01/01/08
AT 18	TMS Detection Zone Layout	01/01/08
	Barriers (BA)	
BA 1A	Precast Concrete Full Barrier Standard Section (New Jersey Shape)	01/01/08
BA 1B	Precast Concrete Full Barrier Standard Section (New Jersey Shape)	01/01/08
BA 1C	Precast Concrete Barrier Terminal For Speed ≤ 40 MPH (New Jersey Shape)	01/01/08
BA 1D	Precast Concrete Full Section Median Installation (New Jersey Shape)	01/01/08
BA 1E	Precast Concrete Full Section Shoulder Applications (New Jersey Shape)	01/01/08
BA 2	Precast Concrete Half Barrier Standard Section (New Jersey Shape)	01/01/08
BA 3A1	Cast In Place Constant Slope Barrier	01/01/08
BA 3A2	Cast In Place Constant Slope Barrier	01/01/08
BA 3B	Precast Concrete Constant Slope Transition Section For Crash Cushion And W-Beam Guardrail	01/01/08
BA 3C	Not Used	
BA 4A	W-Beam Guardrail Hardware	01/01/08
BA 4B	W-Beam Guardrail Transition	01/01/08
BA 4C	W-Beam Guardrail Transition Curb Section	01/01/08
BA 4D	W-Beam Guardrail Anchor Type I	01/01/08
BA 4E	W-Beam Guardrail Installations	01/01/08
BA 4F	W-Beam Guardrail Typicals Divided Roadways	01/01/08

BA 4G	W-Beam Guardrail Typical Multilane Arterial	01/01/08
BA 4H	W-Beam Guardrail Typical 2 Lane 2 Way	01/01/08
BA 4I	W-Beam Guardrail Buried In Backslope Terminal	01/01/08
BA 4J	W-Beam Guardrail Buried In Backslope Terminal With Rub Rail	01/01/08
BA 4K	W-Beam Guardrail Buried In Backslope Terminal Anchor	01/01/08
BA 4L	W-Beam Guardrail Curve Details	01/01/08
BA 4M	W-Beam Guardrail Nested Guardrail 12’ 6” Span	01/01/08
BA 4N	W-Beam Guardrail Nested Guardrail 18’ 9” Span	01/01/08
BA 4O	W-Beam Guardrail Nested Guardrail 25’ Span	01/01/08
BA 4P	W-Beam Guardrail With Precast Barrier For Span > 25’	01/01/08
BA 4Q	Not Used	
BA 4R	W-Beam Median Barrier Transition	01/01/08
BA 4S1	W-Beam Guardrail With Modified Curb and Curb and Gutter	01/01/08
BA 4S2	W-Beam Guardrail With Curb and Gutter ≥ 5”	01/01/08

Catch Basins And Cleanouts (CB)

CB 1	Curb and Gutter Inlet	01/01/08
CB 2	Open Curb Inlet	01/01/08
CB 3	Shallow Catch Basin	01/01/08
CB 4	Open Curb Shallow Catch Basin	01/01/08
CB 5A	Standard Catch Basin and Cleanout Box	01/01/08
CB 5B	Standard Catch Basin and Cleanout Box Section	01/01/08
CB 6A	Drop Inlet Type “A”	01/01/08
CB 6B	Berm Apron With Drop Inlet Type “A”	01/01/08
CB 7A	Drop Inlet Type “B”	01/01/08
CB 7B	Normal Apron With Drop Inlet Type “B”	01/01/08
CB 8A	Double Catch Basin	01/01/08
CB 8B	Double Catch Basin	01/01/08
CB 9A	Standard Catch Basin And Cleanout Box Situation And Layout	01/01/08
CB 9B	Standard Catch Basin And Cleanout Box Section Details	01/01/08
CB 9C	Standard Catch Basin And Cleanout Box Schedule Of Installation 18” to 42” RCP 12” to 48” CMP	01/01/08
CB 9D	Standard Catch Basin And Cleanout Box Schedule Of Installation 48” to 66” RCP 60” to 78” CMP	01/01/08
CB 10A	Standard Catch Basin And Cleanout Box Situation And Layout	01/01/08
CB 10B	Standard Catch Basin And Cleanout Box Section Details	01/01/08
CB 10C	Standard Catch Basin And Cleanout Box Schedule Of Installation 42” to 60” RCP 48” to 72” CMP	01/01/08
CB 11	Standard Manhole	01/01/08

Crash Cushions (CC)

CC 1	Crash Cushion Markings	01/01/08
CC 2	Crash Cushion Drainage Details Guideline A	01/01/08
CC 3	Crash Cushion Drainage Details Guideline B	01/01/08
CC 4	Details For Placement Crash Cushions Type A, B, And D	**02/28/08**
CC 5A	Grading And Placement Details Crash Cushion Type C “Brakemaster”	01/01/08

CC 5B	Grading And Placement Details Crash Cushion Type C "C.A.T"	01/01/08
CC 5C	Grading And Placement Details Crash Cushion Type C "FLEAT-MT"	01/01/08
CC 6	Crash Cushion Type E Sand Barrel Details	01/01/08
CC 7A	Grading And Installation Details Crash Cushion Type F Quad Trend 350	01/01/08
CC 7B	Crash Cushion Type F BEAT-SSCC	01/01/08
CC 8A	Grading And Installation Details Crash Cushion Type G	01/01/08
CC 8B	Grading And Installation Details For "3R" Projects Crash Cushion Type G	01/01/08
CC 9A	Grading And Installation Details Crash Cushion Type H	01/01/08
CC 9B	Grading And Installation Details Crash Cushion Type H (Parabolic Flare)	01/01/08

Diversion Boxes (DB)

DB 1A	Standard Diversion Box/Cover Plate/Grating For 18" DIA. or 24" DIA. Pipe	01/01/08
DB 1B	Standard Diversion Box Hinged Lid Details For 18" DIA. or 24" DIA. Pipe	01/01/08
DB 1C	Standard Diversion Box Bicycle - Safe Grating Details For 18" DIA. or 24" DIA. Pipe	01/01/08
DB 1D	Standard Diversion Box Three Gate Box Sections For 18" DIA. or 24" DIA. Pipe	01/01/08
DB 1E	Standard Diversion Box Three Gate Box Sections For 18" DIA. or 24" DIA. Pipe	01/01/08
DB 1F	Standard Diversion Box Three Gate Box Sections For 18" DIA. or 24" DIA. Pipe	01/01/08
DB 2A	Standard Diversion Box w/Interchangeable Walls, Bottom Slab, Walls And Apron Details	01/01/08
DB 2B	Standard Diversion Box w/Interchangeable Walls, Quantities Schedule	01/01/08
DB 2C	Standard Diversion Box w/Interchangeable Walls, Hand Slide Gate Details	01/01/08
DB 2D	Standard Diversion Box Type "G" Hand Slide Gate Details	01/01/08
DB 2E	Standard Diversion Box Hinged Lid (Solid Cover Plate) Type "A" Details Type I Plan	01/01/08
DB 2F	Standard Diversion Box Hinged Lid (Solid Cover Plate) Type "A" Details Type II Plan	01/01/08
DB 2G	Standard Diversion Box Hinged Lid Solid Cover Type "B" Details	01/01/08
DB 2H	Standard Diversion Box Hinged Lid Solid Cover Type "B" And "C" Details	01/01/08
DB 3A	Standard Diversion Box With Manhole Cover Situation And Layout	01/01/08
DB 3B	Standard Diversion Box With Manhole Cover Up To 42" RCP And Up To 54" CMP	01/01/08
DB 3C	Standard Diversion Box With Manhole Cover 48" to 72" RCP And 60" to 84" CMP	01/01/08
DB 4	Standard Transition Concrete Lined Ditch To Pipe Or Diversion Box	01/01/08

Design Drawings (DD)

DD 1	Superelevation And Widening	01/01/08
DD 2	Surface Ditch, Benched Slope, And Cut Ditch Details	01/01/08
DD 3	Climbing Lanes	01/01/08
DD 4	Geometric Design for Freeways (Roadway)	01/01/08
DD 5A	Entrance And Exit Ramps At Crossroads	01/01/08
DD 5B	Entrance And Exit Ramps At Crossroads	01/01/08
DD 6	Entrance And Exit Ramp Geometrics	01/01/08
DD 7	Freeway Crossover	01/01/08
DD 8	Structural Geometric Design Standards For Clearances	01/01/08
DD 9	Structural Geometric Design Standards	01/01/08
DD 10	Railroad Clearances At Highway Overpass Structures	01/01/08
DD 11	Rural Multi Lane Highways Other Than Freeways	01/01/08
DD 12	Rural Two Lane Highways	01/01/08
DD 13	Frontage And Access Roads (Under 50 ADT)	01/01/08
DD 14A	Typical Rural 2 Lane Road 'Tee' Intersection (High Speed)	01/01/08
DD 14B	Typical Rural 2 Lane Road 'Tee' Intersection (Low Speed)	01/01/08
DD 15A1	Typical Rural 2 Lane Road Intersection (High Speed)	01/01/08
DD 15A2	Typical Rural 2 Lane Road Intersection (High Speed) With Left Turn Acceleration Lane	01/01/08
DD 15B	Typical Rural 2 Lane Road Intersection (Low Speed)	01/01/08
DD 16	Embankment for Bridge Placement	01/01/08

Drainage (DG)

DG 1	Fill Height for Metal Pipe (Steel)	01/01/08
DG 2	Fill Height for Metal Pipe (Aluminum)	01/01/08
DG 3	Maximum Fill Height For HDPE And PVC Pipes	01/01/08
DG 4	Pipe Minimum Cover	01/01/08
DG 5A	Plastic Pipe Culvert Installation	01/01/08
DG 5B	Metal Pipe Or Pipe Arch Culvert Installation	01/01/08
DG 5C	Precast Concrete Pipe Culvert Installation	01/01/08
DG 6	Safety Slope End Section For Circular and Arched Pipes	01/01/08
DG 7	Gasketted Joints Or Coupling Bands For CMP	01/01/08
DG 8	Metal Culvert End Section	01/01/08
DG 9	Miscellaneous Pipe Details	01/01/08

Environmental Controls (EN)

EN 1	Temporary Erosion Control (Check Dams)	01/01/08
EN 2	Temporary Erosion Control (Silt Fence)	01/01/08
EN 3	Temporary Erosion Control (Slope Drain And Temporary Berm)	01/01/08
EN 4	Temporary Erosion Control (Drop Inlet Barriers)	01/01/08
EN 5	Temporary Erosion Control (Pipe Inlet And Curb Inlet Barriers)	01/01/08
EN 6	Temporary Erosion Control (Sediment Trap and Stabilized Construction Entrance)	01/01/08
EN 7	Temporary Erosion Control (Straw Bale Barrier)	01/01/08

Fence And Gates (FG)

FG 1A	Right Of Way Fence And Gates (Wood Post)	01/01/08
FG 1B	Right Of Way Fence And Gates (Wood Post)	01/01/08
FG 2A	Right Of Way Fence And Gates (Metal Post)	01/01/08
FG 2B	Right Of Way Fence And Gates (Metal Post)	01/01/08
FG 3	Swing Gates Type I For Gates Less Than 17’	01/01/08
FG 4A	Standard Wildlife Escape Ramp Details	01/01/08
FG 4B	High Migratory Wildfile Escape Ramp Details	01/01/08
FG 5	Swing Gates Type II For Gates Wider Than 17’	01/01/08
FG 6	Chain Link Fence	01/01/08

Grates, Frames, And Trash Racks (GF)

GF 1	Manhole Frame And Grated Cover	01/01/08
GF 2	Manhole Frame And Solid Cover	01/01/08
GF 3	Rectangular Grate And Frame	01/01/08
GF 4	Directional Flow Grate And Frame	01/01/08
GF 5	Solid Cover And Frame	01/01/08
GF 6	Manhole Steps	01/01/08
GF 7	Standard Screw Gate And Frame	01/01/08
GF 8	2’ x 2’ Grate And Frame	01/01/08
GF 9	28” x 24” Directional Flow Grate And Frame	01/01/08
GF 10	Standard Trash Racks 90 ° X-ing Angle	01/01/08
GF 11	Standard Trash Racks	01/01/08
GF 12	Standard Trash Racks	01/01/08
GF 13	Open Curb Inlet Grate and Frame	01/01/08
GF 14	Solid Cover For Std Dwg DB 1 MS-18 Loading	01/01/08
GF 15	Standard Screw Gate And Frame	01/01/08

General Road Work (GW)

GW 1A	Raised Island	01/01/08
GW 1B	Raised Island and Plowable End Section	01/01/08
GW 2	Concrete Curb And Gutter	01/01/08
GW 3	Concrete Curb And Gutter Details	01/01/08
GW 4	Concrete Driveways And Sidewalks	01/01/08
GW 5A	Pedestrian Access	01/01/08
GW 5B	Pedestrian Access	01/01/08
GW 5C	Pedestrian Access	01/01/08
GW 6	Right Of Way Marker	01/01/08
GW 7	Newspaper And Mailbox Stop Layout	01/01/08
GW 8	Newspaper And Mailbox Support Hardware	01/01/08
GW 9	Delineation Hardware	01/01/08
GW 10	Delineation Application	01/01/08
GW 11	Sidewalks And Shoulders On Urban Roadways	01/01/08

Paving (PV)

PV 1	Joints For Highways With Concrete Traffic Lanes And Shoulders	01/01/08
PV 2	Pavement/Approach Slab Details	01/01/08
PV 3	Concrete Pavement Details For Urban And Interstate	01/01/08
PV 4	Concrete Pavement Details For Urban And Interstate	01/01/08
PV 5	Urban Concrete Pavement Details	01/01/08
PV 6	Rumble Strips	01/01/08
PV 7	Rumble Strips - Typical Application	01/01/08
PV 8	Rumble Strips - Centerline Application	01/01/08
PV 9	Dowel Bar Retrofit	01/01/08

Signals (SL)

SL 1A	Traffic Signal Mast Arm Pole And Luminaire Extension	01/01/08
SL 1B	Traffic Signal Mast Arm Pole And Luminaire Extension	01/01/08
SL 2	Traffic Signal Mast Arm Details 30’ Thru 75’	01/01/08
SL 3	Underground Service Pedestal Details	01/01/08
SL 4	Traffic Signal Mast Arm Pole Foundation	01/01/08
SL 5	Traffic Signal Pole	01/01/08
SL 6	Pole Mounted Power Source Details	01/01/08
SL 7	Span Wire Signal Pole Details	01/01/08
SL 8	Signal Head Details	01/01/08
SL 9	Pedestrian Signal Assembly	01/01/08
SL 10	Traffic Signal Controller Base Details	01/01/08
SL 11	Traffic Signal Loop Detector Details	01/01/08
SL 12	Traffic Counting Loop Detector Details	01/01/08
SL 13	Video Detection Camera Mount	01/01/08
SL 14	Highway Luminaire Pole Ground Mount	01/01/08
SL 15	Luminaire Slip Base Details	01/01/08
SL 16	Highway Luminaire Pole Barrier Mount	01/01/08
SL 17	Highway Luminaire Pole Foundation Extension	01/01/08
SL 18	Single Transformer Substation Details	**02/28/08**

Signs (SN)

SN 1	Bridge Load Limits Signs	01/01/08
SN 2	School Speed Limit Assembly	01/01/08
SN 3	Overhead School Speed Limit Assembly	01/01/08
SN 4	Not Used	
SN 5	Typical Installation For Milepost Signs	01/01/08
SN 6	Speed Reduction Sign Sequence	01/01/08
SN 7A	Placement of Ground Mount Signs	01/01/08
SN 7B	Placement of Ground Mount and Barrier Mount Signs	01/01/08
SN 8A	Temporary Use Ground Mounted Timber Sign Post	01/01/08
SN 8B	Temporary Use Ground Mounted Square Steel Sign Post	01/01/08
SN 9A	Small Sign Tubular Steel Post Base With Concrete (B1)	01/01/08
SN 9B	Small Sign Tubular Steel Post Base (B2A)	01/01/08
SN 9C	Small Sign Tubular Steel Post Base With Concrete (B2B)	01/01/08

SN 10A	Slipbase Sign Base (B3) Hardware	01/01/08
SN 10B	Slipbase Sign Base (B3) Installation	01/01/08
SN 11	Surface Mounted Tubular Steel Sign Bases (B4A and B4B)	01/01/08
SN 12	Barrier Mounted Tubular Steel Sign Bases (B5A and B5B)	01/01/08
SN 13A	Tubular Steel Sign Mounting Requirements	01/01/08
SN 13B	Tubular Steel Sign Mounting Hardware	01/01/08
SN 13C	"Z" Bar Mounting Requirements	01/01/08
SN 14A	Freeway Sign Post Requirements	01/01/08
SN 14B	Freeway Sign Base and Post Requirements (B6A-B6B-B6C)	01/01/08
SN 14C	Freeway Sign Foundation and Fuse Plate Requirements	**02/28/08**
SN 14D	Freeway Sign Frame Fabrication Details	01/01/08
SN 14E	Freeway Sign Bracket Details	01/01/08

Striping (ST)

ST 1	Object Markers "T" Intersection And Pavement Transition Guidance	01/01/08
ST 2	Freeway Crossover Markings	01/01/08
ST 3A	Typical Pavement Markings	01/01/08
ST 3B	Typical Pavement Markings	01/01/08
ST 3C	Typical Pavement Markings	01/01/08
ST 3D	Typical Pavement Markings	01/01/08
ST 4	Crosswalks, Parking And Intersection Approaches	01/01/08
ST 5	Painted Median And Auxiliary Lane Details	**02/28/08**
ST 6	Passing/Climbing Lanes Traffic Control	01/01/08
ST 7	Pavement Markings And Signs At Railroad Crossing	01/01/08
ST 8	Plowable Pavement Markers	01/01/08
ST 9	School Crossing And School Message	01/01/08

Structures And Walls (SW)

SW 1A	Welded End Guard Unit	01/01/08
SW 1B	Precast Concrete Cattle Guard	01/01/08
SW 2	Noise Wall Placement Options	01/01/08
SW 3A	Precast Concrete Noise Wall 1 Of 2	01/01/08
SW 3B	Precast Concrete Noise Wall 2 Of 2	01/01/08
SW 4A	Precast Concrete Retaining/Noise Wall 1 Of 3	01/01/08
SW 4B	Precast Concrete Retaining/Noise Wall 2 Of 3	01/01/08
SW 4C	Precast Concrete Retaining/Noise Wall 3 Of 3	01/01/08
SW 5	Precast Pilaster Post	01/01/08
SW 6	Precast Concrete Panel Surface Texture Options	01/01/08

Traffic Control (TC)

TC 1	Traffic Control Drawing Series General Notes	01/01/08
TC 2A	Work Zone Channelization Devices	01/01/08
TC 2B	Work Zone Signing	01/01/08
TC 2C	Work Zone Advanced Warning Arrow Panels	01/01/08
TC 2D	Delineator Mounted Work Zone Sign Bracket	01/01/08
TC 3	Hazard Mitigation	01/01/08

TC 4A	Standard Work Zone Signing General	01/01/08
TC 4B	Reduced Speed Work Zone Signing General	01/01/08
TC 4C	Traffic Control Project Limit Signing	01/01/08
TC 4D	Work Zone Specialty Signs	01/01/08
TC 5	Traffic Control Urban Intersection With Roadways Under 50 MPH	01/01/08
TC 6	Traffic Control Pedestrian Routing	01/01/08
TC 7	Traffic Control Road Closed, Diversion	01/01/08
TC 8	Traffic Control Lane Closure	01/01/08
TC 9	Work Zone Business Access Signing	01/01/08
TC 10	Traffic Control Expressway And Freeway Crossover/Turn Around	01/01/08
TC 11	Traffic Control Exit Ramp Gore	01/01/08
TC 12	Traffic Control Entrance Ramp Gore	01/01/08
TC 13	Traffic Control Shoulder Haul Road	01/01/08
TC 14	Traffic Control Flagging Operation	01/01/08
TC 15	Traffic Control 2 Lane/2 Way Seal Coat With Cover Material	01/01/08
TC 16	Traffic Control For Non-Durable Pavement Marking	01/01/08

Listing of Supplemental Drawings

Issue Date: March 5, 2008

Revised February 28, 2008

CC 4	Details For Placement Crash Cushions Type A, B, and D
SL 18	Single Transformer Substation Details
SN 14C	Freeway Sign Foundation And Fuse Plate Requirements
ST 5	Painted Median And Auxiliary Lane Details

SHOULDER APPLICATION

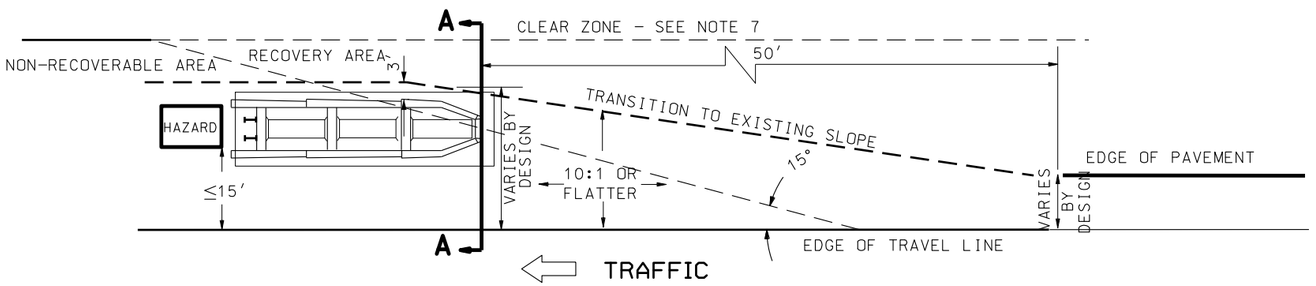

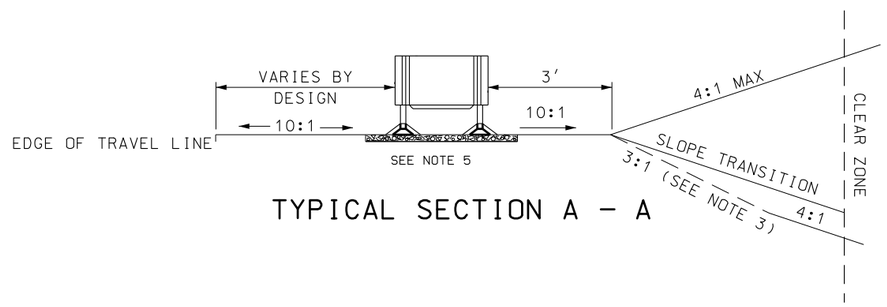

TYPICAL SECTION A - A

GORE APPLICATION AREA

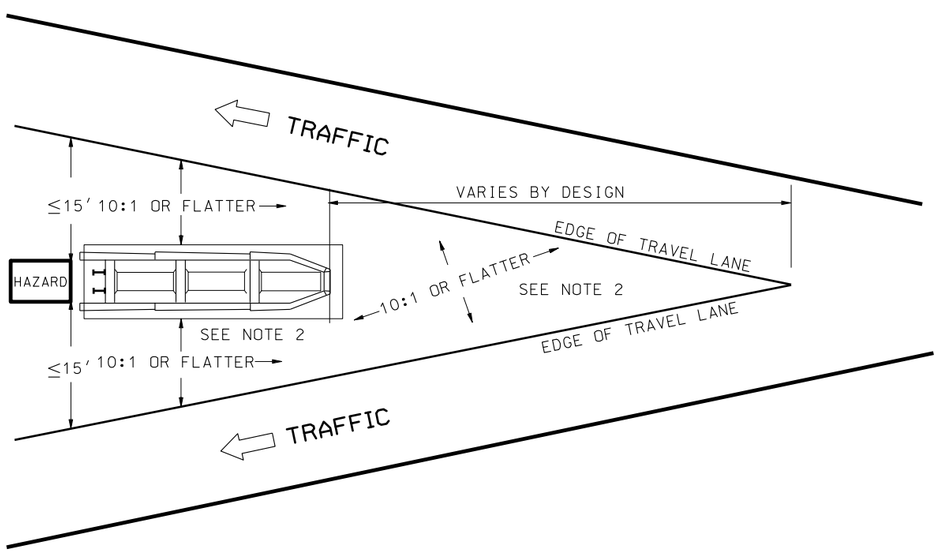

MEDIAN APPLICATION

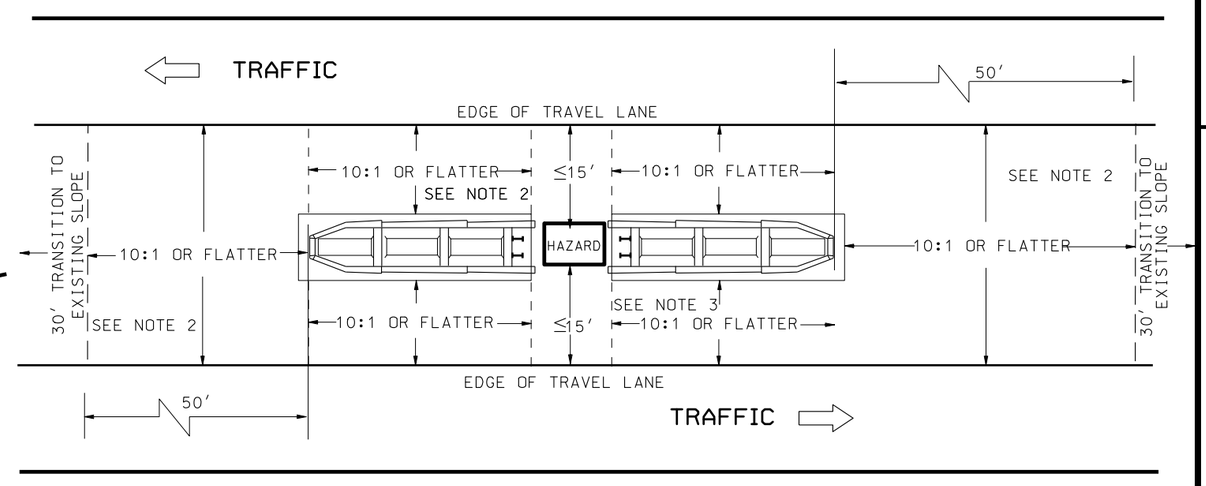

NOTES:

1. REFER TO CURRENT EDITION OF GUIDELINES FOR CRASH CUSHIONS AND BARRIER END TREATMENTS FOR APPROVED CRASH CUSHION SYSTEMS AND FOR SPECIFIC APPLICATIONS DETAILS OF THE TYPES A, B, AND D CRASH CUSHION SYSTEMS.
2. ALL APPLICATIONS REQUIRE THE USE OF A 10:1 SLOPE OR FLATTER TO THE FRONT AND SIDE APPROACHES. USE A 10:1 OR FLATTER SLOPE AT THE REAR OF THE SYSTEM WHEN TRAFFIC ALSO APPROACHES FROM THE REAR OF THE SYSTEM.
3. USE A 4:1 OR FLATTER FILL SLOPE AND A RECOVERY AREA IF IMPRACTICAL, USE A MAXIMUM 3:1 FILL SLOPE AND A RECOVERY AREA ESTABLISHED AT THE TOE OF 3:1 FILL SLOPE. WHEN USED WITH A CUT SLOPE, A 4:1 OR FLATTER CUT IS REQUIRED IN THE RECOVERY AREA.
4. USE A TRANSITION ELEMENT, AS PER MANUFACTURER'S SPECIFICATIONS, WHEN TRAFFIC APPROACHES THE REAR OF SYSTEM.
5. USE MANUFACTURER'S SPECIFICATIONS FOR PAD AND BACKUP REQUIREMENTS.
6. INSTALL PROPER MARKINGS AS PER STD DWG CC 1.
7. MAINTAIN AASHTO CLEAR ZONE REQUIREMENTS.

REVISIONS

NO.	DATE	APPR.	REMARKS
1	02/28/08	GS	REVISION TO NOTE 1.

UTAH DEPARTMENT OF TRANSPORTATION
STANDARD DRAWINGS FOR ROAD AND BRIDGE CONSTRUCTION
SALT LAKE CITY, UTAH

RECOMMENDED FOR APPROVAL — FEB.28,2008 DATE
CHAIRMAN STANDARDS COMMITTEE APPROVED — FEB.28,2008 DATE
DEPUTY DIRECTOR

DETAILS FOR PLACEMENT CRASH CUSHIONS TYPE A, B, AND D

STANDARD DRAWING TITLE

STD DWG
CC 4

SUPPLEMENTAL DRAWING

DGN File: L:\Standard Drawings\Imperial\2008\Approved\x_Supplemental Issues\x_Supplemental\CC04.dgn
04-MAR-2008

TRANSFORMER DIMENSION		
ITEM	A	B
25KVA	29″	33″
50KVA	31″	33″
75KVA	32.5″	33″

CONFIRM ACTUAL TRANSFORMER DIMENSIONS. IF THEY EXCEED THOSE LISTED. SIZE THE EQUIPMENT SUPPORT PAD ACCORDINGLY.

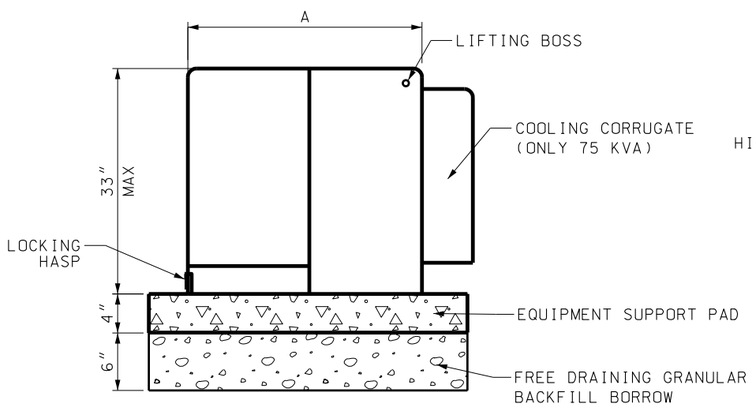

TRANSFORMER SIDE ELEVATION

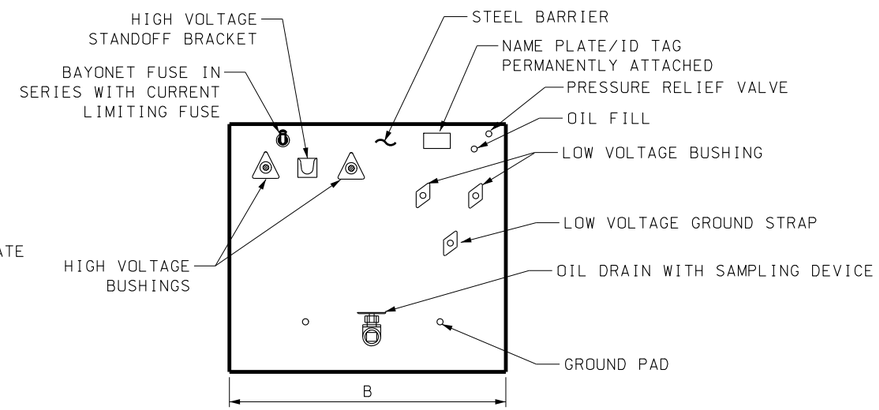

TRANSFORMER FRONT DOOR OPEN ELEVATION

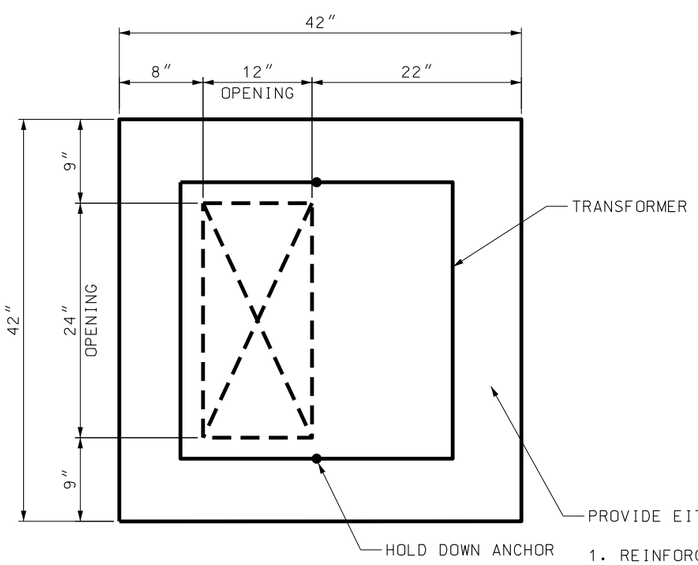

EQUIPMENT SUPPORT PAD PLAN

PROVIDE EITHER TRANSFORMER PAD:

1. REINFORCED CONCRETE WITH 6″X6″X10/10 WELDED WIRE FABRIC, 2″ COVER. CAST-IN-PLACE OR PRECAST.

2. PREFABRICATED POLYMER CONCRETE.

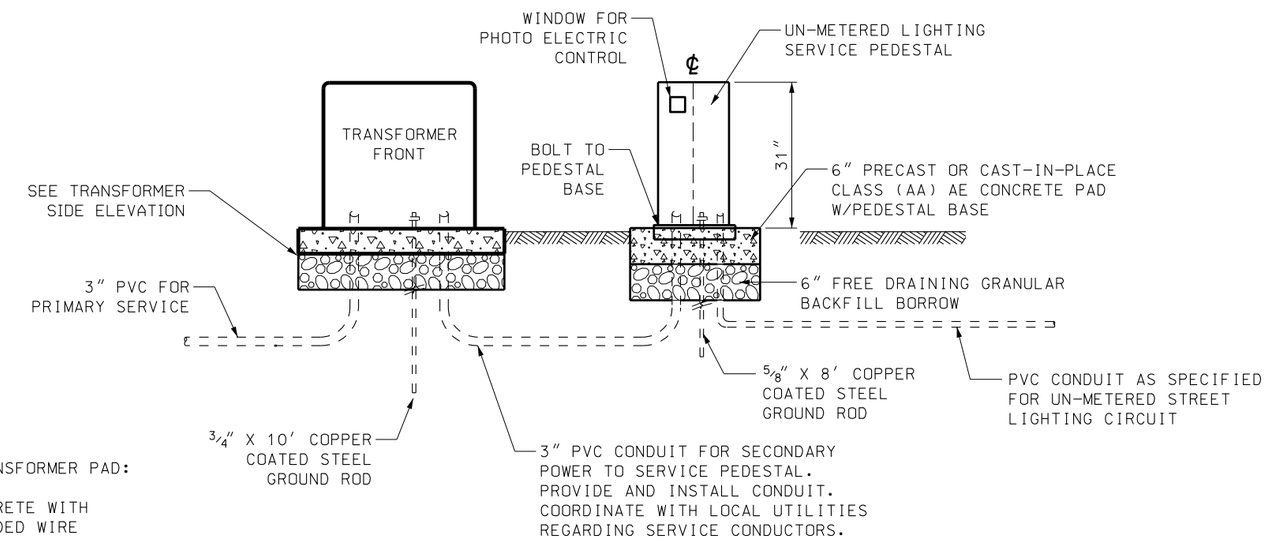

NOTES:

1. POWER COMPANY SERVICE POINT. SINGLE PHASE VOLTAGE WITH DISCONNECTING PROVISIONS. POWER COMPANY TO RUN UNDER GROUND CABLE CONNECTION IN CONTRACTOR FURNISHED TRENCH TO TRANSFORMER HIGH VOLTAGE TERMINALS.
   A. CONTRACTOR CONTACTS SERVING POWER COMPANY TO VERIFY PRIMARY VOLTAGE AND TYPE OF CONNECTION.
   B. CONTRACTOR NOTIFIES SERVING POWER COMPANY A MINIMUM OF 24 HOURS IN ADVANCE OF DESIRED POWER SOURCE CONNECTION.

2. LOCATE SERVICE PEDESTAL ON EITHER SIDE OF CONTROLLER FOUNDATION AS SPECIFIED. LOCATION MAY BE MODIFIED TO BEST SUIT FIELD CONDITIONS PER RESIDENT ENGINEER APPROVAL. MAINTAIN 48 INCH MINIMUM CLEARANCE AROUND EACH UNIT WITH DOORS OPENED TO ANY POSITION.

3. LOCATE SERVICE PEDESTAL AND TRANSFORMER SO WATER DRAINS AWAY FROM FOUNDATIONS AND JUNCTION BOXES. SITE PREPARATION INCLUDING GRADING MAY BE REQUIRED BEFORE PLACING EQUIPMENT.

4. PROVIDE UNDERGROUND SERVICE PEDESTAL:
   A. RATED 100 AMP AS SPECIFIED.
   B. PROVIDE FOR SIX FULL SIZE POLES (INCLUDING MAINS) FOR BOTH METERED AND UN-METERED CIRCUIT BREAKER INTERIORS.
   C. USE PLUG-IN CIRCUIT BREAKERS.
   D. LABEL ALL BREAKERS.
   E. FUSE DETACHABLE BASE FOR PRE-INSTALLATION IN CONCRETE FOUNDATION.
   F. SECURE PIANO HINGED DOORS WITH MASTER PADLOCK NO. P-848.

SUPPLEMENTAL DRAWING

REVISIONS

NO.	DATE	APPR.	REMARKS
1	02/28/08	LM	REVISED ENTIRE DRAWING. CHANGE PREVIOUSLY APPROVED BY STANDARDS COMMITTEE. INCORRECT DRAWING ORIGINALLY PUBLISHED.

UTAH DEPARTMENT OF TRANSPORTATION
STANDARD DRAWINGS FOR ROAD AND BRIDGE CONSTRUCTION

RECOMMENDED FOR APPROVAL — SALT LAKE CITY, UTAH — FEB. 28, 2008 DATE
CHAIRMAN STANDARDS COMMITTEE APPROVED — FEB. 28, 2008 DATE
DEPUTY DIRECTOR

SINGLE TRANSFORMER SUBSTATION DETAILS
STANDARD DRAWING TITLE

STD DWG
SL 18

DGN File:L:\Standard_Drawings\Imperial\2008Approved\x_Supplemental_Issues\x_Supp1Approved\SL18.dgn
04-MAR-2008

FUSE PLATE AND SLICE PLATE TABLE													
POST SIZE	F	G	H	J	K	L	M	N	d 1	d 2	† 2	BOLT SIZE
S3 x 5.7	3 1/2"	2 1/4"	5/8"	2 3/8"	1 1/2"	7/16"	5/16"	9/16"	5/8"	3/8"	1/4"	1/2"
S4 x 9.5	4 1/4"	2 1/4"	1"	2 5/8"	1 1/2"	9/16"	1/2"	9/16"	5/8"	3/8"	5/16"	1/2"
S6 x 12.5	4 3/4"	2 1/2"	1 1/8"	4"	2"	1"	1/2"	1"	5/8"	3/4"	3/8"	1/2"
S6 x 17.25	4 3/4"	2 1/2"	1 1/8"	4"	2"	1"	1/2"	1"	3/4"	3/4"	3/8"	5/8"
S8 x 18.4	5"	2 1/2"	1 1/4"	5 1/4"	2 1/4"	1 1/2"	3/4"	1 1/4"	7/8"	1 1/8"	3/8"	3/4"
W10 x 19	6"	3"	1 1/2"	5 3/4"	2 1/4"	1 3/4"	7/8"	1 3/8"	7/8"	1 1/8"	3/8"	3/4"
W10 x 22	6"	3"	1 1/2"	5 3/4"	3 3/4"	1"	7/8"	1 3/8"	1"	1 1/8"	3/8"	7/8"
W10 x 26	6"	3"	1 1/2"	5 3/4"	3 3/4"	1"	7/8"	1 3/8"	1"	1 1/8"	1/2"	7/8"
W10 x 30	6"	3"	1 1/2"	5 3/4"	3 3/4"	1"	7/8"	1 3/8"	1"	1 1/8"	1/2"	7/8"

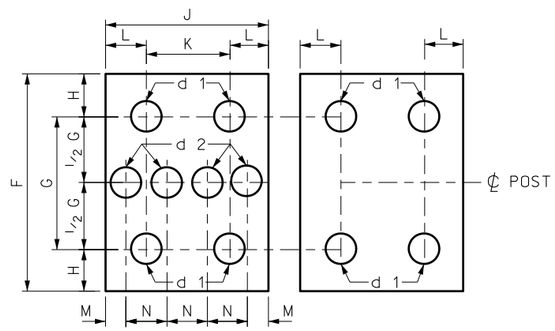

FRONT FUSE PLATE DETAIL

REAR SLICE PLATE DETAIL

† 2 IS THE PLATE THICKNESS REQUIRED FOR BOTH THE FRONT FUSE PLATE AND REAR SLICE PLATE.

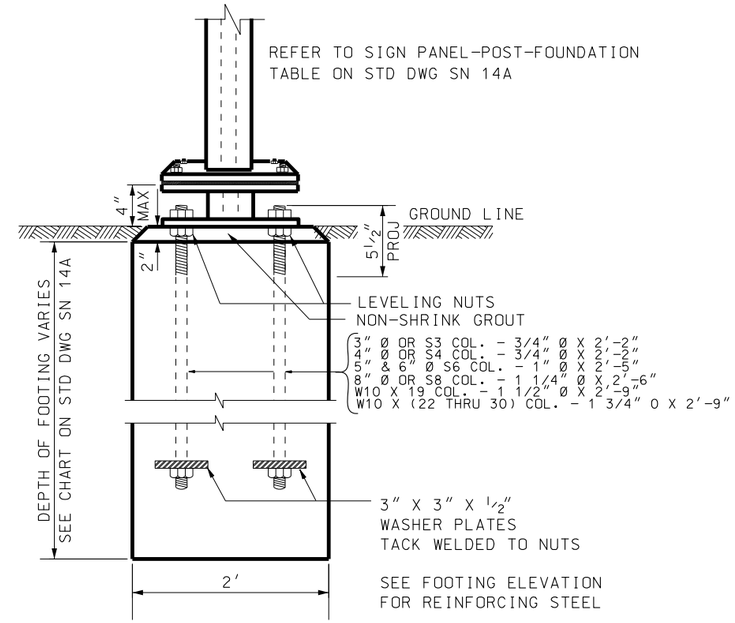

FOOTING DETAILS
FOR SIGN BASES B6A-B6B-B6C
CONCRETE CLASS AA(AE)

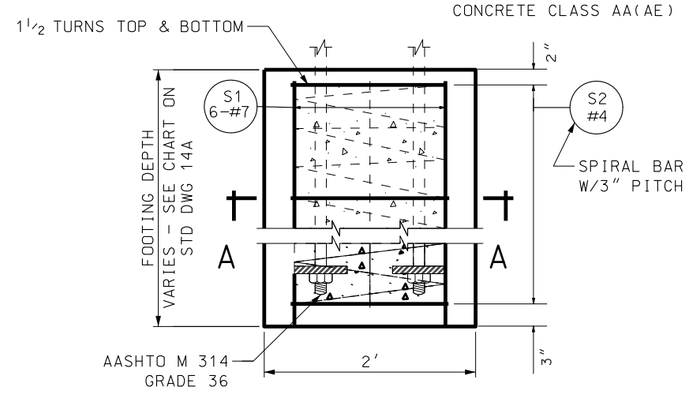

FOOTING ELEVATION

BAR	LENGTH
S1	FOOTING DEPTH MINUS 2"
S2	1'-8" OUTSIDE DIAMETER

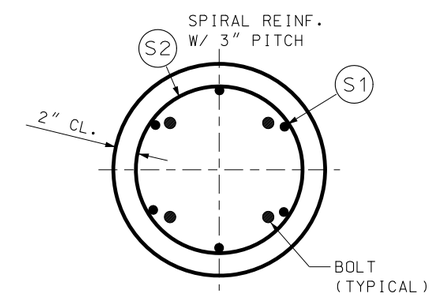

SECTION A - A

SIDE VIEW

DETAIL "A" HINGE

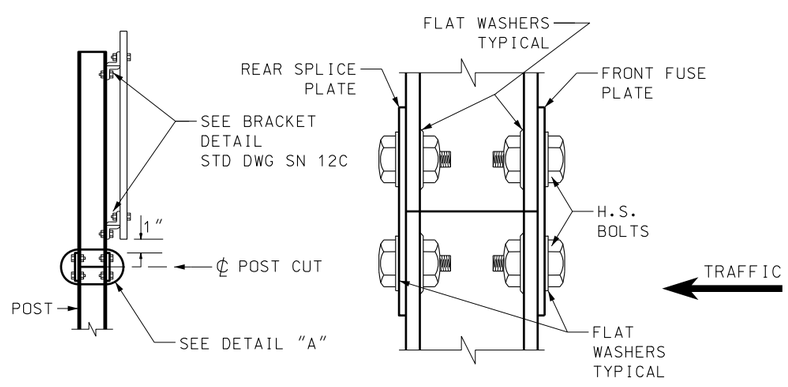

FUSE PLATE DETAIL
(SEE TABLE FOR DIMENSIONS)

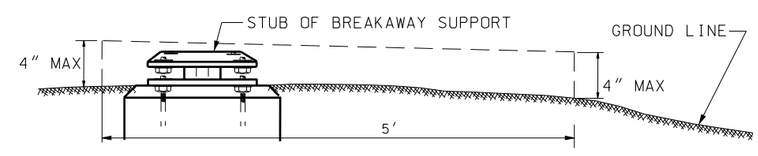

PLACE SIGN SUPPORT FOUNDATION SO IMPACTING VEHICLES DO NOT SNAG ON EITHER FOUNDATION OR ANY SUBSTANTIAL REMAINS OF SIGN SUPPORT OVER A 5' CHORD OR AT ANY POINT ALONG THE CHORD. GRADE SURROUNDING TERRAIN TO PERMIT IMPACTING VEHICLES TO PASS OVER FOUNDATION AND PORTIONS OF SIGN SUPPORTS WHICH REMAIN IN THE GROUND OR ARE RIGIDLY ATTACHED TO THE FOUNDATION.

BREAKAWAY SUPPORT STUB
HEIGHT MEASUREMENT

SUPPLEMENTAL DRAWING

NOTES:

1. DO NOT ATTACH SIGN BELOW HINGE POINT.
2. REFER TO STD DWG SN 14A FOR GENERAL NOTES.

REVISIONS

NO.	DATE	APPR.	REMARKS
1	02/28/08	GS	EDITORIAL REVISION TO FUSE PLATE TABLE.

UTAH DEPARTMENT OF TRANSPORTATION
STANDARD DRAWINGS FOR ROAD AND BRIDGE CONSTRUCTION
SALT LAKE CITY, UTAH

RECOMMENDED FOR APPROVAL — FEB.28,2008 DATE
CHAIRMAN STANDARDS COMMITTEE APPROVED — FEB.28,2008 DATE
DEPUTY DIRECTOR

FREEWAY SIGN FOUNDATION AND FUSE PLATE REQUIREMENTS

STANDARD DRAWING TITLE

STD DWG
SN 14C

DGN File: L:\Standard Drawings\Imperial\2008\Approved\x_Supplemental Issues\xSupp1Approved\SN14C.dgn

04-MAR-2008

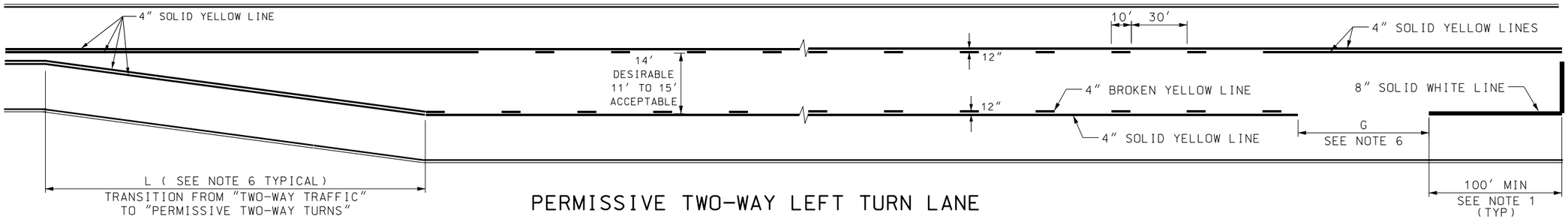

PERMISSIVE TWO-WAY LEFT TURN LANE

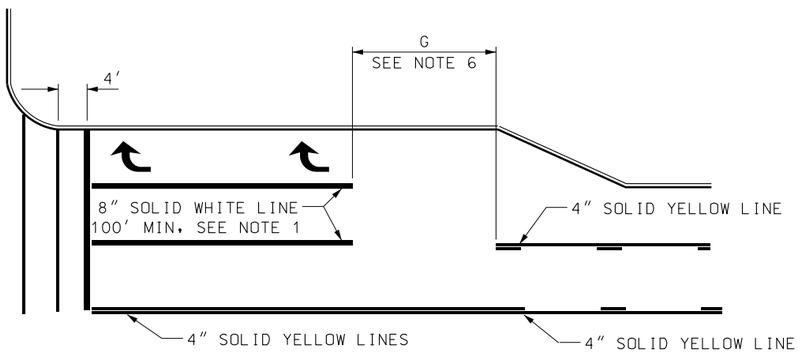

AUXILIARY TURN LANE

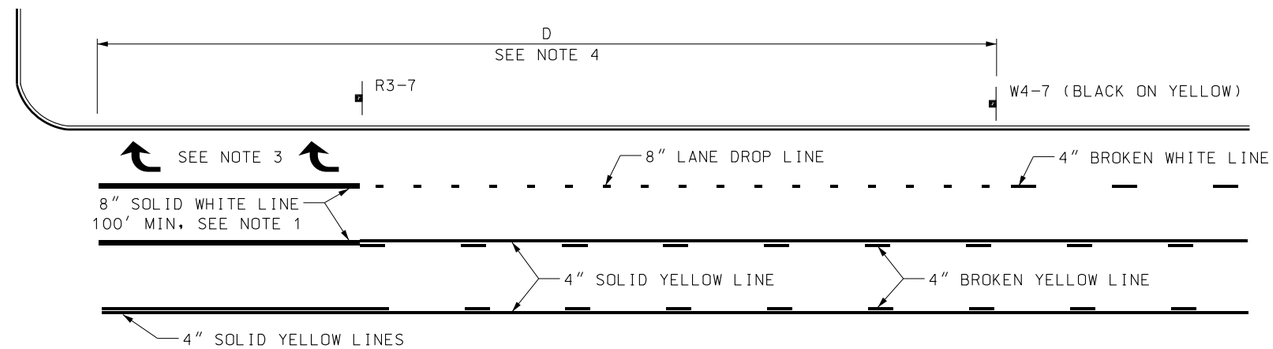

THROUGH LANE CHANGE TO MANDATORY TURN LANE

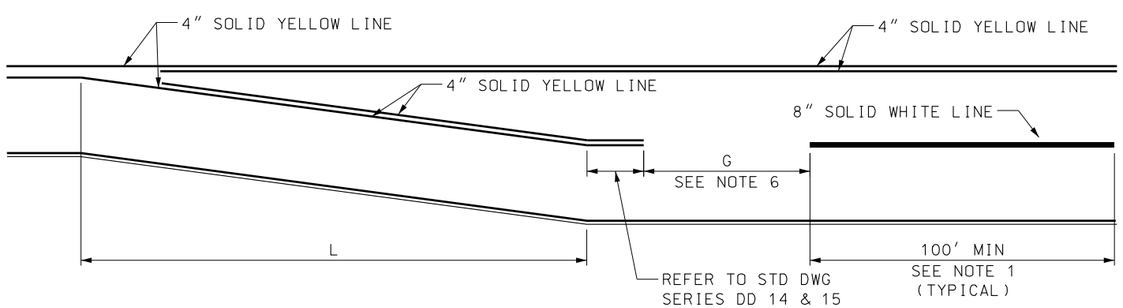

LEFT TURN LANE

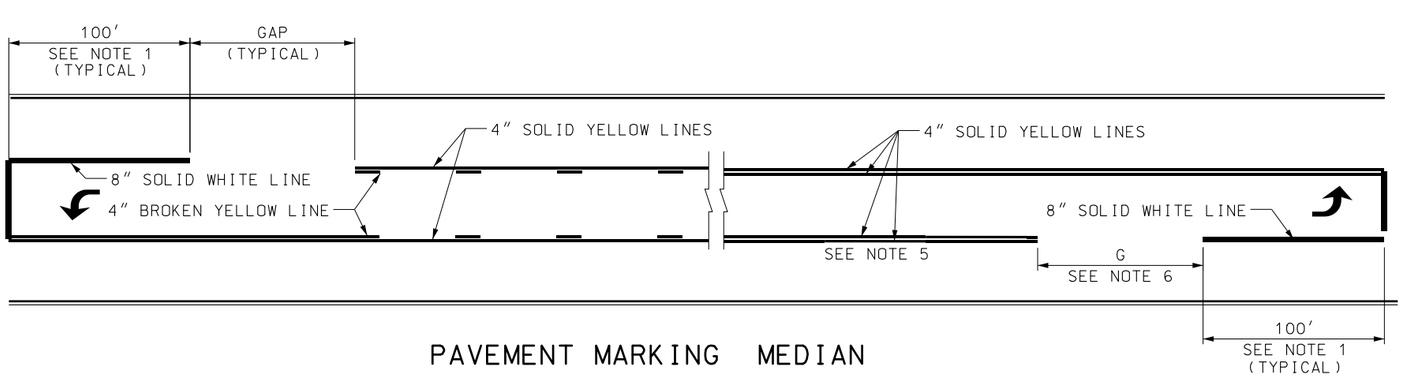

PAVEMENT MARKING MEDIAN

NOTES:

1. USE A CAPACITY ANALYSIS TO DETERMINE THE LENGTH OF STORAGE REQUIRED FOR TURN LANE. A MINIMUM LENGTH OF 100 FEET IS REQUIRED.
2. USE THE STANDARD HIGHWAY SIGNS MANUAL FOR PAVEMENT MESSAGES.
3. USE PAVEMENT MARKINGS CONSISTING OF 2 TURN ARROWS, W4-7 SIGN, AND R3-7 SIGN WHEN A THROUGH LANE CHANGES TO A MANDATORY TURN LANE.
4. FOR DISTANCE "D" REFER TO TABLE II ON STD DWG DD 3.
5. CREATE A PAVEMENT MARKING ISLAND BY PLACING TWO DOUBLE YELLOW LINES FOR EACH DIRECTION (4 SOLID YELLOW LINES TOTAL).
6. G = 90' FOR SPEEDS 40 MPH AND BELOW
   G = 140' FOR SPEEDS 45 TO 50 MPH
   G = 180' FOR SPEEDS 55 MPH AND ABOVE
7. FOR RAISED ISLAND AND PLOWABLE END SECTION DETAILS REFER TO STD DWGS GW 1A AND GW 1B.
8. FOR TAPER LENGTH "L" REFER TO TABLE I ON STD DWG DD3.

SUPPLEMENTAL DRAWING

NO.	DATE	APPR.	REMARKS
1	02/28/08	WJS	DELETED R3-7 SIGN FROM AUXILARY TURN LANE.

REVISIONS

UTAH DEPARTMENT OF TRANSPORTATION
STANDARD DRAWINGS FOR ROAD AND BRIDGE CONSTRUCTION
SALT LAKE CITY, UTAH

RECOMMENDED FOR APPROVAL — FEB.28,2008 DATE
CHAIRMAN STANDARDS COMMITTEE APPROVED — FEB.28,2008 DATE
DEPUTY DIRECTOR

PAINTED MEDIAN AND AUXILIARY LANE DETAILS

STANDARD DRAWING TITLE

STD DWG
ST 5

DGN File:L:\Standard Drawings\Imperial\2008\Approved\v-Supplemental Issues\v-Suppl Approved\ST05.dgn

04-MAR-2008