FUSE PLATE AND SLICE PLATE TABLE												
POST SIZE	F	G	H	J	K	L	M	N	d 1	d 2	† 2	BOLT SIZE
S3 x 5.7	3 1/2"	2 1/4"	5/8"	2 3/8"	1 1/2"	7/16"	5/16"	9/16"	5/8"	3/8"	1/4"	1/2"
S4 x 9.5	4 1/4"	2 1/4"	1"	2 5/8"	1 1/2"	9/16"	1/2"	9/16"	5/8"	3/8"	5/16"	1/2"
S6 x 12.5	4 3/4"	2 1/2"	1 1/8"	4"	2"	1"	1/2"	1"	5/8"	3/4"	3/8"	1/2"
S6 x 17.25	4 3/4"	2 1/2"	1 1/8"	4"	2"	1"	1/2"	1"	3/4"	3/4"	3/8"	5/8"
S8 x 18.4	5"	2 1/2"	1 1/4"	5 1/4"	2 1/4"	1 1/2"	3/4"	1 1/4"	7/8"	1 1/8"	3/8"	3/4"
W10 x 19	6"	3"	1 1/2"	5 3/4"	2 1/4"	1 3/4"	7/8"	1 3/8"	7/8"	1 1/8"	3/8"	3/4"
W10 x 22	6"	3"	1 1/2"	5 3/4"	3 3/4"	1"	7/8"	1 3/8"	1"	1 1/8"	3/8"	7/8"
W10 x 26	6"	3"	1 1/2"	5 3/4"	3 3/4"	1"	7/8"	1 3/8"	1"	1 1/8"	1/2"	7/8"
W10 x 30	6"	3"	1 1/2"	5 3/4"	3 3/4"	1"	7/8"	1 3/8"	1"	1 1/8"	1/2"	7/8"

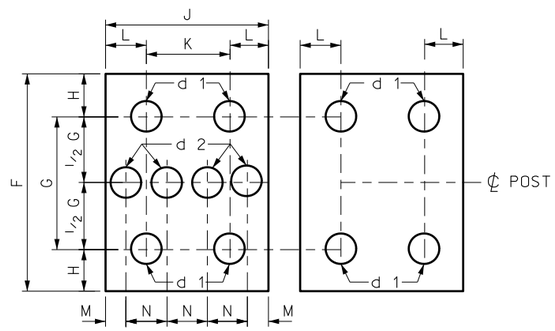

FRONT FUSE PLATE DETAIL

REAR SLICE PLATE DETAIL

† 2 IS THE PLATE THICKNESS REQUIRED FOR BOTH THE FRONT FUSE PLATE AND REAR SLICE PLATE.

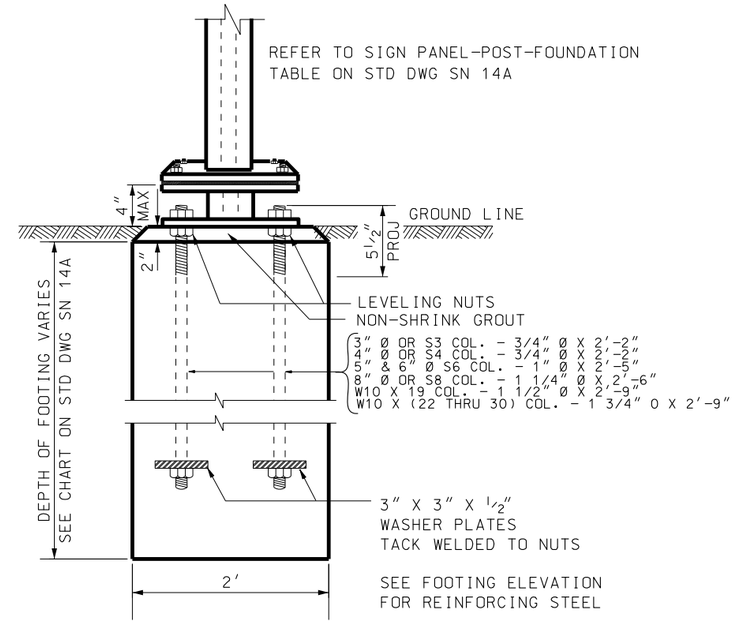

FOOTING DETAILS
FOR SIGN BASES B6A-B6B-B6C
CONCRETE CLASS AA(AE)

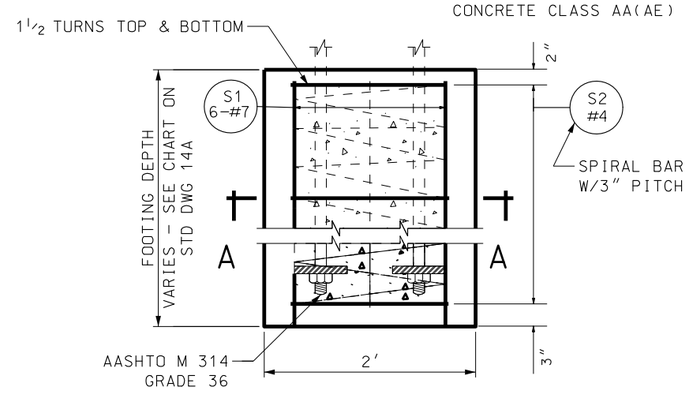

FOOTING ELEVATION

BAR	LENGTH
S1	FOOTING DEPTH MINUS 2"
S2	1'-8" OUTSIDE DIAMETER

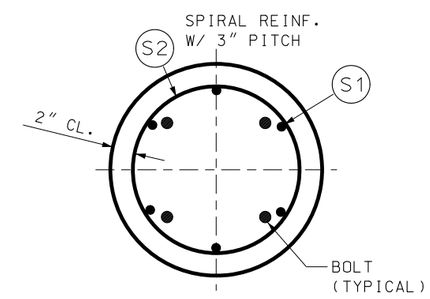

SECTION A - A

SIDE VIEW

DETAIL "A" HINGE

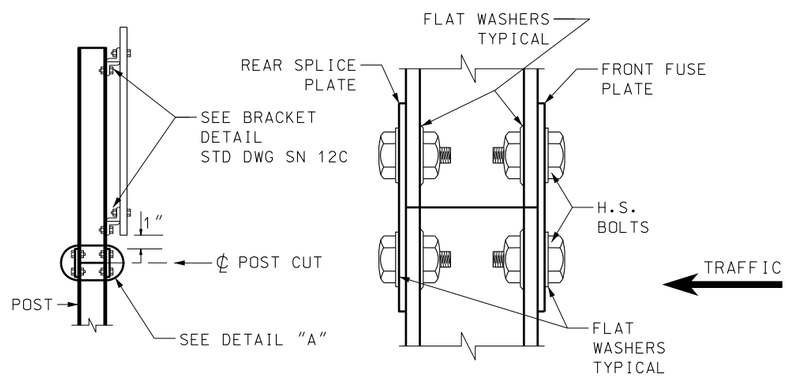

FUSE PLATE DETAIL
(SEE TABLE FOR DIMENSIONS)

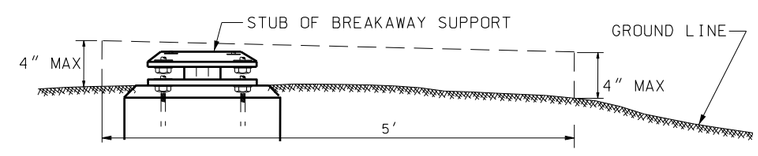

PLACE SIGN SUPPORT FOUNDATION SO IMPACTING VEHICLES DO NOT SNAG ON EITHER FOUNDATION OR ANY SUBSTANTIAL REMAINS OF SIGN SUPPORT OVER A 5' CHORD OR AT ANY POINT ALONG THE CHORD. GRADE SURROUNDING TERRAIN TO PERMIT IMPACTING VEHICLES TO PASS OVER FOUNDATION AND PORTIONS OF SIGN SUPPORTS WHICH REMAIN IN THE GROUND OR ARE RIGIDLY ATTACHED TO THE FOUNDATION.

BREAKAWAY SUPPORT STUB
HEIGHT MEASUREMENT

SUPPLEMENTAL DRAWING

NOTES:

1. DO NOT ATTACH SIGN BELOW HINGE POINT.
2. REFER TO STD DWG SN 14A FOR GENERAL NOTES.

REVISIONS

NO.	DATE	APPR.	REMARKS
1	02/28/08	GS	EDITORIAL REVISION TO FUSE PLATE TABLE.

UTAH DEPARTMENT OF TRANSPORTATION
STANDARD DRAWINGS FOR ROAD AND BRIDGE CONSTRUCTION
SALT LAKE CITY, UTAH

RECOMMENDED FOR APPROVAL — FEB.28,2008 DATE
CHAIRMAN STANDARDS COMMITTEE APPROVED — FEB.28,2008 DATE
DEPUTY DIRECTOR

FREEWAY SIGN FOUNDATION AND FUSE PLATE REQUIREMENTS

STANDARD DRAWING TITLE

STD DWG
SN 14C

DGN File:L:\Standard.Drawings\Imperial\2008\Approved\x.Supplemental.Issues\xSupplApproved\SN14C.dgn

04-MAR-2008