FULL DEPTH PRECAST CONCRETE DECK PANELS

GUIDELINES

THESE GUIDELINE DRAWINGS CAN BE USED ONLY FOR BRIDGES WHICH HAVE ALL OF THE FOLLOWING CHARACTERISTICS:

TANGENTIAL (NO HORIZONTAL CURVATURE)
PANELS PLACED ORTHOGONALLY TO THE BEAM/GIRDERS.

CONSTANT CROSS-SLOPE. CROWNS AND SUPERELEVATIONS CREATED WITH ASPHALT OR CONCRETE OVERLAY, OR CLOSURE POUR. UP TO 35 PSF IS ALLOWED.

SKEW : 0 TO 25 DEGREES

PARALLEL STEEL GIRDERS WITH A MINIMUM TOP FLANGE WIDTH OF 16" OR PRESTRESSED AASHTO BEAMS (TYPES II, III, IV, V, OR VI)

FOR PRECAST PANELS - MAX. BEAM/GIRDER SPACING = 10'-0"
FOR PRESTRESSED PANELS - MAX. BEAM/GIRDER SPACING = 12'-0"

MAX. OVERHANG = 4'-0"
MIN. OVERHANG = 1'-0"
NO OVERHANG ALLOWED FOR CLOSURE POURS ONLY.

DEAD LOADS:
35 PSF FUTURE OVERLAY
NO MORE THAN 2 EXTERIOR TRAFFIC PARAPET
MAX. DEAD LOAD PER PARAPET = 569 PLF
SHEAR BLOCKOUT WIDTH: 4" MAX. (BOT. OF PANEL), 5" MAX. (TOP OF PANEL)
SHEAR BLOCKOUT LENGTH: 16" MAX. (BOT. OF PANEL), 17" MAX. (TOP OF PANEL)

IIMPLEMENTATION

IT IS THE DESIGNER'S RESPONSIBILITY TO:

DESIGN AND CHECK THE REQUIRED SHEAR STUDS AND/OR REINFORCING STEEL CONNECTING THE GIRDERS/BEAMS TO THE DECK TO ENSURE ADEQUATE COMPOSITE ACTION BETWEEN THE FRAMING MEMBERS AND PANELS IN ACCORDANCE WITH ALL APPLICABLE CODES.

CREATE THE CONCRETE DECK PANEL LAYOUT SHEET SHOWING TYPE AND NUMBER OF PANELS TO BE USED AS WELL AS NUMBER AND SPACING OF SHEAR BLOCKOUTS REQUIRED.

CALCULATE FINAL DECK ELEVATIONS AND CREATE TOP OF DECK ELEVATIONS SHEET(S).

CALCULATE THE ADDITIONAL NEGATIVE MOMENT REINFORCEMENT REQUIRED FOR CONTINUITY OVER BENTS.

DESIGN AND CHECK ALL CHARACTERISTICS RELATED TO REQUIRED CLOSURE POURS.

CHECK THE STRUCTURAL CAPACITY OF THE EXISTING GIRDERS/BEAMS AND/OR NEW GIRDERS/BEAMS FOR THE INSTALLATION OF THE PANELS (INCLUDING EFFECTS OF PANEL INSTALLATION SEQUENCING). USE OF THIS GUIDELINE DRAWING IMPLIES NO ASSERTION AS TO THE STRUCTURAL CAPACITY OF ANY GIRDERS OR BEAMS SHOWN. DEVELOP LOAD RATINGS AS DIRECTED BY UDOT. VERIFY ADEQUATE CAPACITY IN GIRDERS FOR THE EFFECTS OF LONG TERM POST-TENSIONING WHEN APPLICABLE.

DESIGN AND DETAIL THE TENDON CONFINEMENT FOR PRESTRESSING AND POST-TENSIONING, IF APPLICABLE.

DESIGNER TO PROVIDE POSITIVE DRAINAGE DETAILS PER UDOT STANDARD PRACTICE. DRAINAGE HOLES THROUGH THE PANELS ARE PROHIBITED.

IF THE HAUNCH IS GREATER THAN 3" DESIGNER MUST DESIGN AND ACCOMMODATE REINFORCEMENT FOR THE HAUNCH.

APPLICABLE GENERAL NOTES ARE TO BE INCLUDED IN THE PLAN SET.

IF PARAPET OTHER THAN TYPE SPECIFICALLY SHOWN IN THESE STANDARD DRAWINGS IS USED, DESIGNER WILL VERIFY SIZE AND SPACING OF REINFORCEMENT CONNECTING PARAPET TO PANEL.

CLOSURE POUR DETAILS SHOWN FOR MAXIMUM BEAM SPACING OF 10'-0". AT A MINIMUM, EXTEND CONTINUOUS REINFORCEMENT, TOP AND BOTTOM, FROM PRECAST PANEL, #6 AT 6" SPACING INTO CLOSURE POUR. FOR BEAM SPACINGS GREATER THAN 10'-0", DESIGNER WILL DESIGN AND DETAIL CLOSURE POUR AND APPROPRIATE POST-TENSIONING AS REQUIRED.

GENERAL NOTES

PRECAST CONCRETE PANELS DESIGNED IN ACCORDANCE WITH AASHTO LRFD BRIDGE DESIGN SPECIFICATIONS, 4TH EDITION WITH ALL INTERIM PROVISIONS.

PANELS DESIGNED FOR AN HL-93 LOAD INCLUDING AND A 35 PSF LOAD FOR FUTURE OVERLAY.

PRECAST PANEL CONCRETE:	f'c = 4000 PSI CLASS AA(AE)
PRESTRESSED PANEL CONCRETE:	f'ci = 4,000 PSI f'c = 5,000 PSI
CLOSURE POUR CONCRETE:	f'c = 4000 PSI (MIN) CLASS AA(AE)
NON-SHRINK GROUT:	f'c = 5,000 PSI @ 24 HRS
REINFORCING STEEL (COATED)	fy = 60,000 PSI
HIGH STRENGTH BARS:	fy = 150,000 PSI ASTM A722
PRESTRESSED LOW RELAXATION STRAND:	fpi = 31.5 KIP fpu = 27.75 KIP TOTAL LOSSES = 24.3 KIP
STRUCTURAL STEEL:	fy = 50,000 PSI AASHTO M270 GR 50

MATERIALS, CONSTRUCTION AND WORKMANSHIP WILL BE IN ACCORDANCE WITH UTAH DEPARTMENT OF TRANSPORTATION STANDARD SPECIFICATIONS FOR ROAD AND BRIDGE CONSTRUCTION (THE LATEST EDITION AND SUPPLEMENTS THERETO WHICH ARE IN EFFECT AT THE DATE OF REQUEST FOR BIDS) ALONG WITH STANDARD SPECIFICATIONS SECTION 03339 FULL DEPTH STANDARD PRECAST CONCRETE DECK PANELS.

ALL WELDING WILL CONFORM TO AASHTO/AWS D1.5 BRIDGE WELDING CODE.

LIFTING SUPPORTS AND HANDLING CONSIDERATIONS WILL BE DESIGNED AND DETAILED IN ACCORDANCE WITH THE PCI DESIGN HANDBOOK, PRECAST AND PRESTRESSED CONCRETE, FIFTH EDITION WITH ALL INTERIMS AND ERRATA.

TOP SURFACE OF PANELS AND ALL JOINT SURFACES WILL HAVE A HEAVY BROOM FINISH.

CHAMFER ALL EXPOSED CORNERS 3/4". PRECAST PANELS ADJACENT TO CLOSURE POURS OR OTHER PANELS ARE NOT CONSIDERED EXPOSED CORNERS.

THE PRECAST PANELS HAVE A 1/4" CONCRETE GRINDING ALLOWANCE FOR CORRECTING UNEVEN ROADWAY SURFACES AT TRANSVERSE JOINTS BETWEEN PRECAST CONCRETE DECK PANELS AND END OF BRIDGE DECK OR EDGE OF ADJACENT PHASE(S). DECK THICKNESS SHOWN AS NOMINAL OR FINAL THICKNESS AFTER GRINDING. ACCOUNT FOR 1/4" FOR GRINDING ALLOWANCE.

APPLY CONCRETE POLYMER OVERLAY ON BRIDGE DECK AFTER CONCRETE GRINDING OR STEEL SHOT IS COMPLETE.

SEE "PRECAST CONCRETE PANEL LAYOUT" SHEET FOR PANEL TYPES AND LOCATIONS.

SEE TOP OF DECK ELEVATIONS SHEETS AND/OR CONCRETE UNIT SHEETS FOR SIZE, TYPE, ORIENTATION, NUMBER AND SPACING OF SHEAR STUDS/BLOCKOUTS.

ALL MILD REINFORCEMENT WILL BE COATED PER UDOT SPECIFICATIONS UNLESS OTHERWISE NOTED.

ALL STRUCTURAL GROUT WILL HAVE SYNTHETIC FIBER REINFORCEMENT AND A CORROSION INHIBITOR ADMIXTURE.

ALL PANEL AND CLOSURE POUR CONCRETE WILL HAVE A CORROSION INHIBITOR ADMIXTURE.

INDEX OF SHEETS

GENERAL NOTES
GENERAL LAYOUTS
TYPICAL PANEL PLAN
PRECAST PANEL REINFORCING
PRESTRESSED PANEL REINFORCING
CLOSURE POUR DETAILS
SHEAR STUD BLOCKOUT DETAILS
MISC PANEL DETAILS
WELDED TIE PANEL CONNECTION
SHEAR KEYWAY PANEL CONNECTION
POST-TENSIONED PANEL CONNECTION
PARAPET DETAILS

NO.	DATE	BY	REMARKS

REVISIONS

UTAH DEPARTMENT OF TRANSPORTATION
SALT LAKE CITY, UTAH
STRUCTURES DIVISION

DESIGN ____ CHECK ____
DRAWN ____ CHECK ____
QUANT. ____ CHECK ____

APPROVAL RECOMM. ____ DATE ____ SENIOR DESIGN ENGR.
APPROVED FOR USE BY UDOT ____ DATE ____ UDOT BRIDGE ENGR.

ABC STANDARDS
FULL DEPTH PRECAST CONCRETE DECK PANEL
GENERAL NOTES
PROJECT NUMBER
PROJECT NUMBER

COUNTY
COUNTY

X-####
DRG. NO.

SHT. OF

ssfiles
ssdate

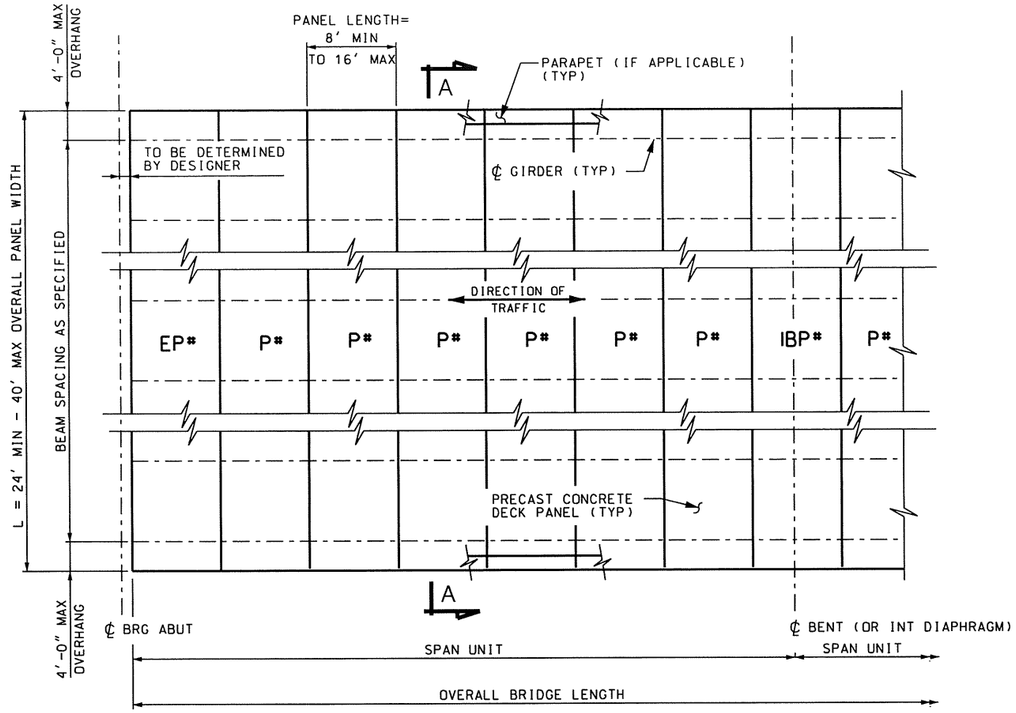

PRECAST CONCRETE PANEL TYPES

SEE "PANEL TYP EP, P, & IBP DETAILS" FOR ADDITIONAL INFORMATION

PRECAST PANEL TYPES	
EP#	PANEL ADJACENT TO ABUTMENT
P#	STANDARD INTERIOR PANEL
IBP#	PANEL OVER INTERIOR BENT (OR DIAPHRAGM)

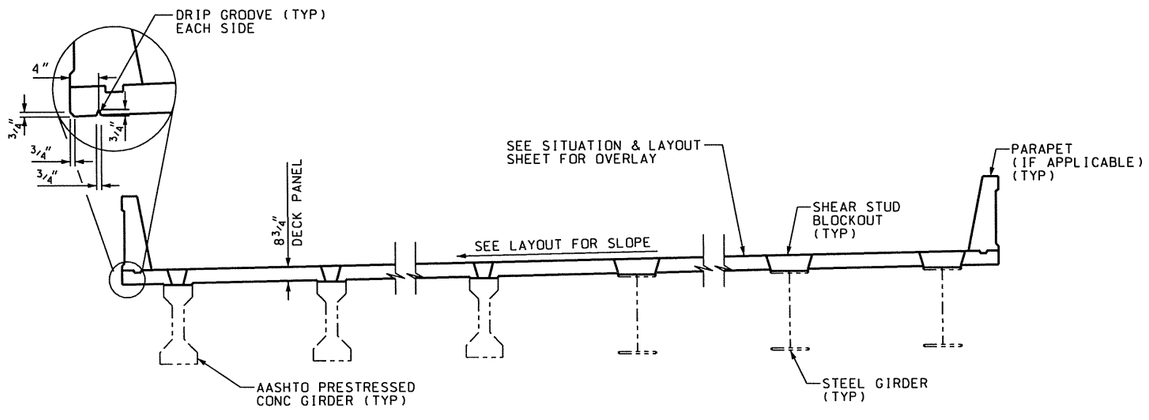

SECTION A-A

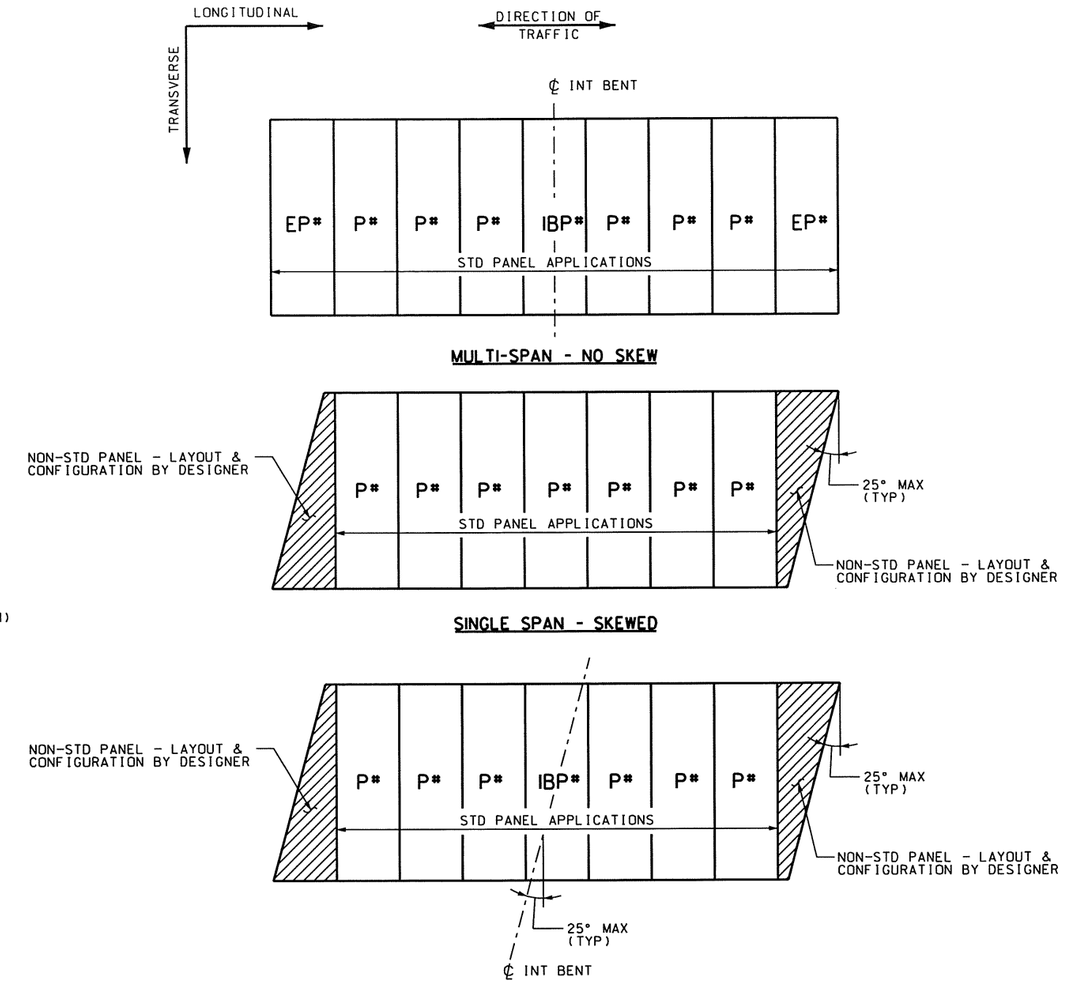

STD PRECAST CONCRETE PANEL APPLICATIONS

NO.	DATE	BY	REMARKS

REVISIONS

UTAH DEPARTMENT OF TRANSPORTATION
SALT LAKE CITY, UTAH
STRUCTURES DIVISION

DESIGN ____ CHECK ____
DRAWN ____ CHECK ____
QUANT. ____ CHECK ____

APPROVAL RECOMM. ____ DATE ____ SENIOR DESIGN ENGR.
APPROVED FOR USE BY UDOT ____ DATE ____ UDOT BRIDGE ENGR.

ABC STANDARDS
FULL DEPTH PRECAST CONCRETE DECK PANEL
GENERAL LAYOUTS
PROJECT NUMBER
PROJECT NUMBER ____

COUNTY
COUNTY

X-####
DRG. NO.

SHT. OF

SSdate99 SSfile99

NOTES

1. FOR VERTICAL ADJUSTMENTS, SHEAR STUD BLOCKOUTS AND ANCHORS SEE "MISC PANEL DETAILS" SHEET.
2. FOR DETAILS OF SHEAR STUD BLOCKOUT SEE "SHEAR STUD BLOCKOUT DETAILS" SHEET.
3. SEE PANEL REINFORCING SHEETS FOR REQUIRED REINFORCING.
4. SEE PANEL CONNECTION SHEETS FOR CONNECTION DETAILS.

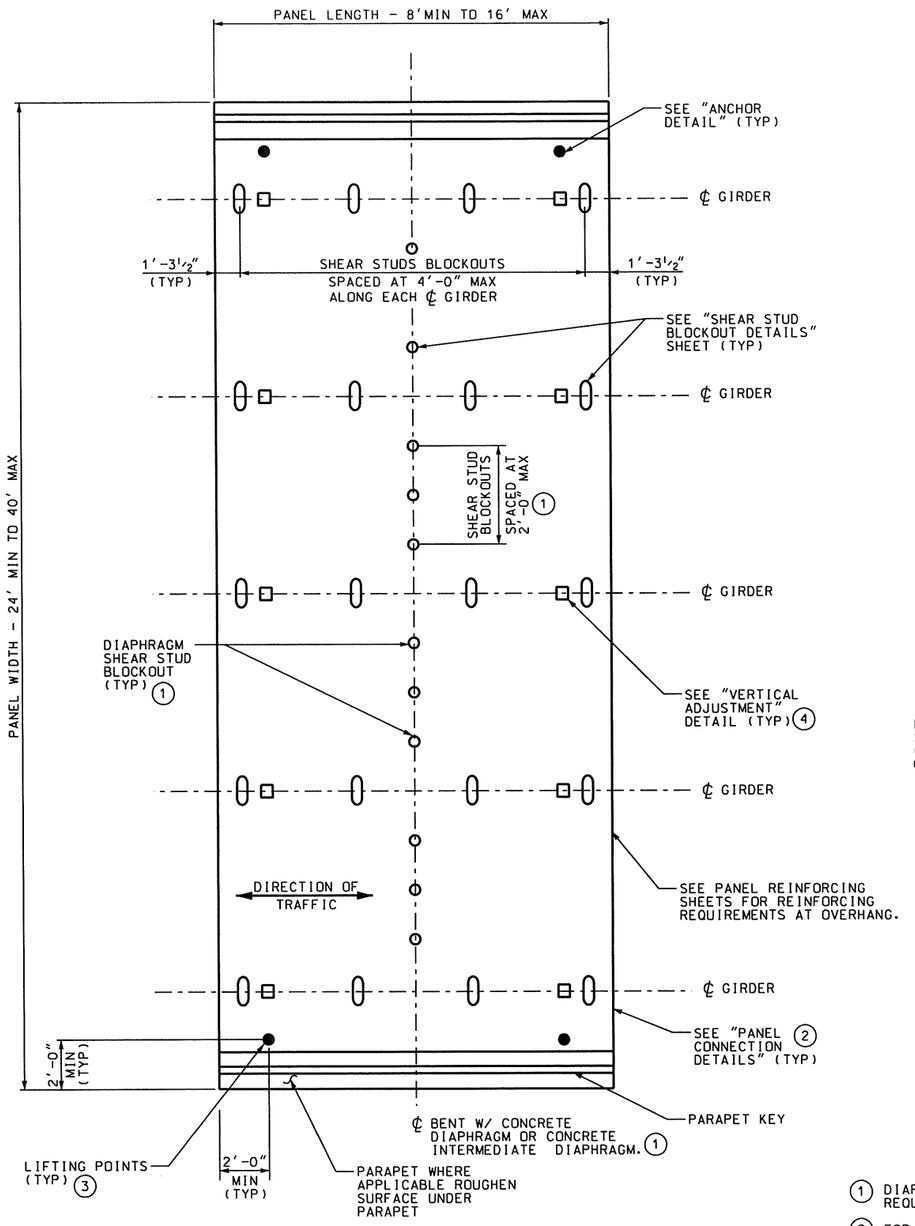

PANEL BLOCKOUT PLAN

SHOWING PANEL TYPE IBP# - OTHER PANEL TYPES DIFFER AS NOTED.

SIZE OF PANEL, GIRDER NUMBER AND SPACING, AND OVERHANG FOR ILLUSTRATION ONLY. SEE GENERAL NOTES SHEET FOR ACTUAL USAGE LIMITS.

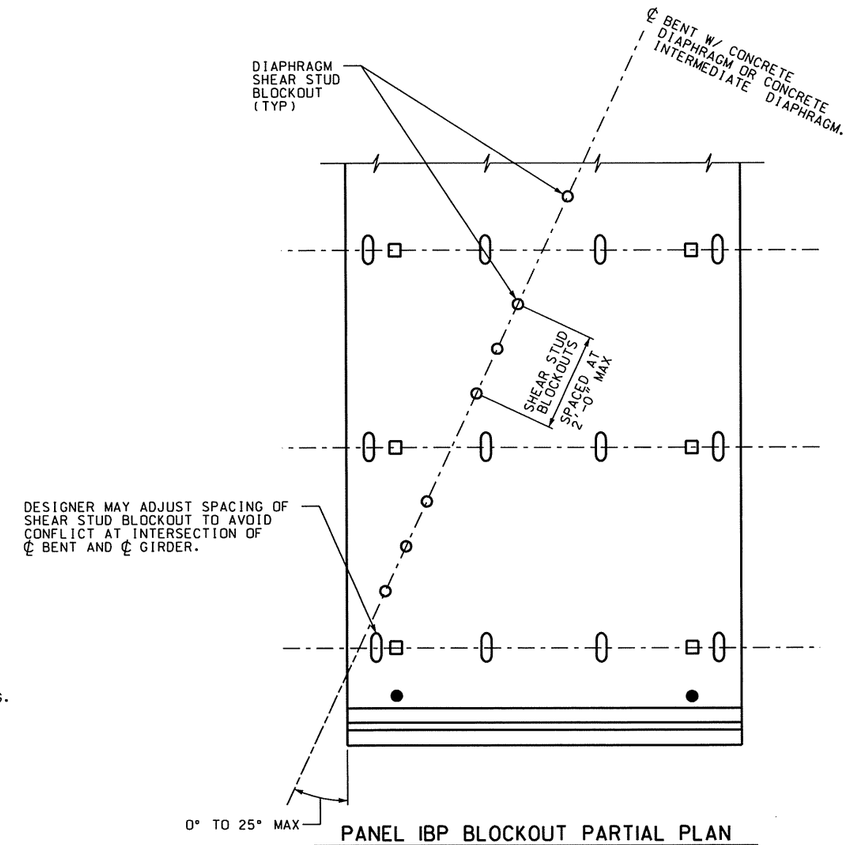

PANEL IBP BLOCKOUT PARTIAL PLAN

SHOWING SKEWED CONDITION. FOR DETAILS NOT SHOWN, SEE "PANEL BLOCKOUT PLAN" THIS SHEET.

(1) DIAPHRAGM SHEAR STUD BLOCKOUTS REQUIRED ONLY FOR PANEL TYPE IBP#.

(2) FOR PANEL TYPE EP#, OMIT PANEL CONNECTIONS ALONG THE APPROPRIATE TRANSVERSE EDGE OF PANEL WHEN USING CONNECTION OPTIONS 1 OR 2.

(3) CONTRACTOR WILL DETERMINE NUMBER AND LOCATION OF LIFTING POINTS. SEE "ANCHOR DETAIL" ON MISC PANEL DETAIL SHEET.

(4) A MINIMUM OF 2 VERTICAL ADJUSTMENT ASSEMBLIES ARE REQUIRED AT ℄ EACH GIRDER.

PRECAST CONCRETE PANEL QUANTITIES

TYPE	S.F.	NO.
EP#		
P#		
IBP#		

REVISIONS

NO.	DATE	BY	REMARKS

UTAH DEPARTMENT OF TRANSPORTATION
SALT LAKE CITY, UTAH
STRUCTURES DIVISION

DESIGN ___ CHECK ___
DRAWN ___ CHECK ___
QUANT. ___ CHECK ___

APPROVAL RECOM. ___ DATE ___ SENIOR DESIGN ENGR.
APPROVED FOR USE BY UDOT ___ DATE ___ UDOT BRIDGE ENGR.

ABC STANDARDS
FULL DEPTH PRECAST CONCRETE DECK PANEL
TYPICAL PANEL PLAN
PROJECT NUMBER ___ PROJECT NUMBER

COUNTY
COUNTY

X-####
DRG. NO.

SHT. OF

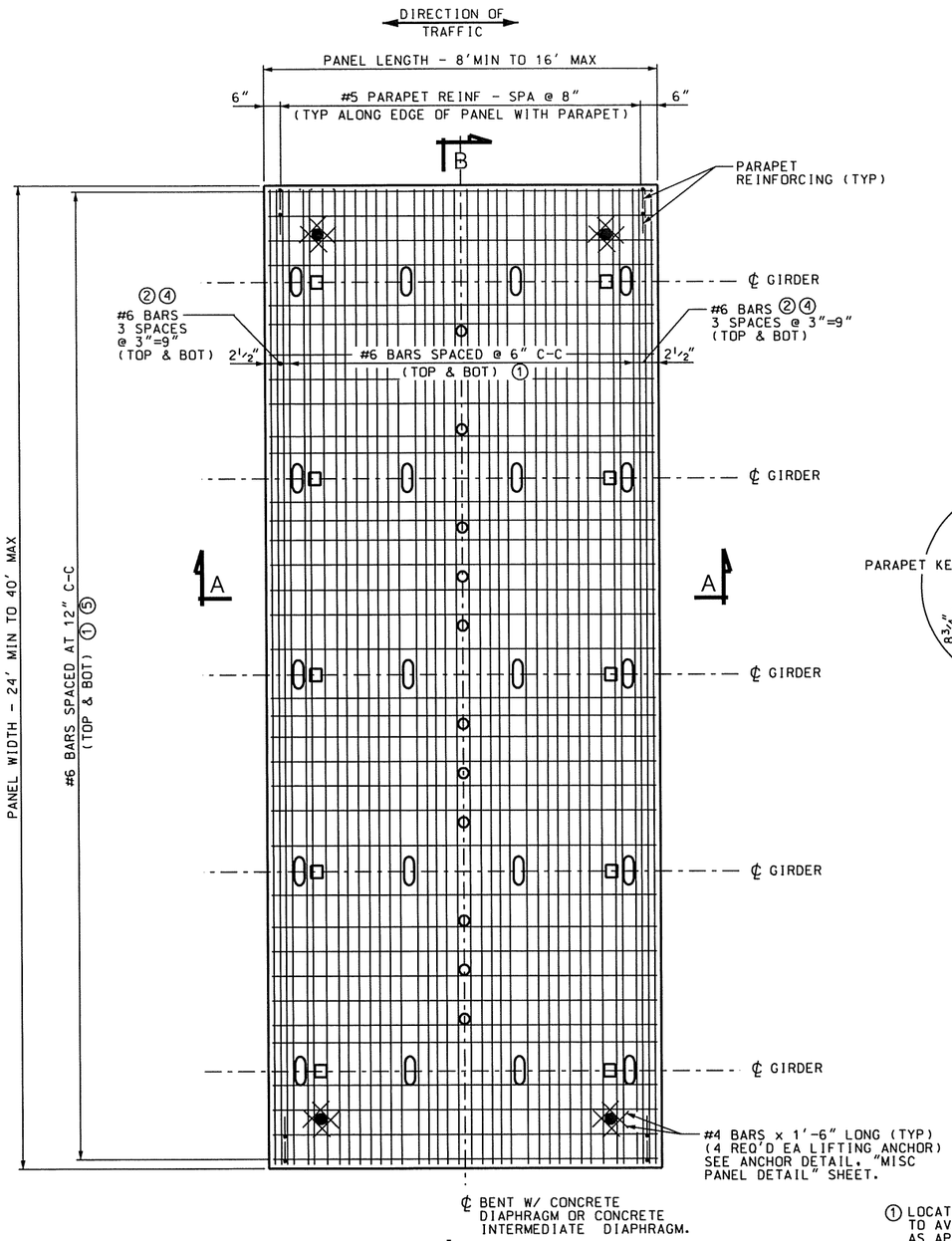

PANEL BLOCKOUT PLAN

SHOWING PANEL TYPE IBP# - SEE "TYPICAL PANEL PLAN" SHEET FOR OTHER PANEL TYPES.

SIZE OF PANEL, GIRDER NUMBER AND SPACING, AND OVERHANG FOR ILLUSTRATION ONLY. SEE GENERAL NOTES SHEET FOR ACTUAL USAGE LIMITS.

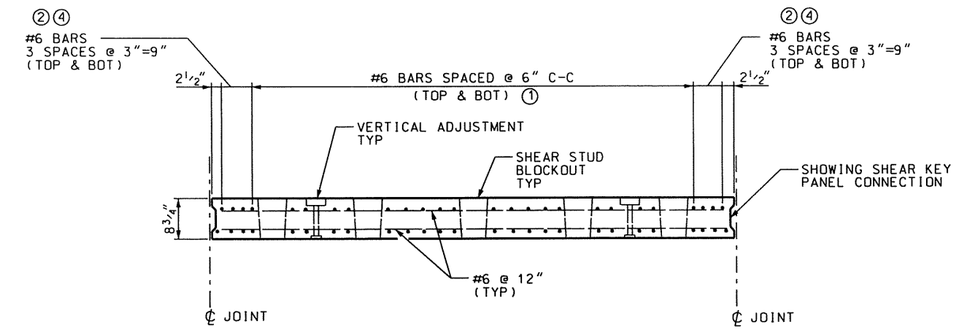

SECTION A-A

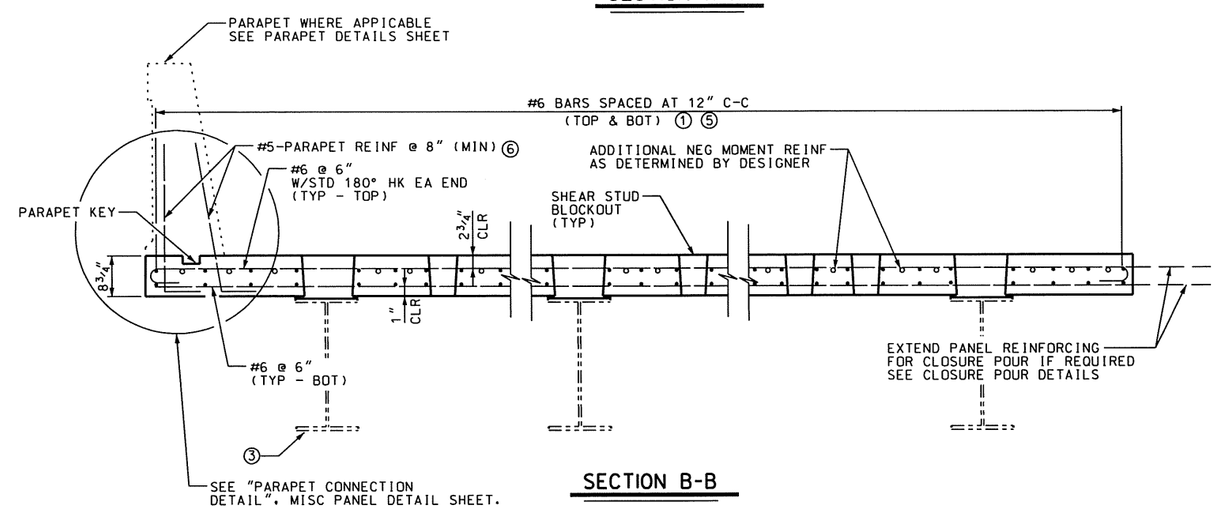

SECTION B-B

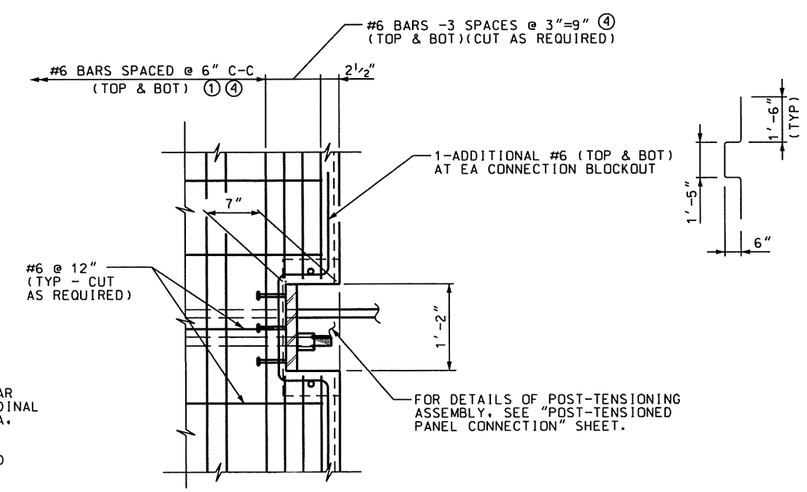

DETAIL A

① LOCATION OF BARS TO BE ADJUSTED TO AVOID CONFLICTS WITH BLOCKOUTS AS APPROVED BY DESIGNER.

② EDGE BARS SHOWN FOR WELDED TIE OR SHEAR KEYWAY TYPE CONNECTIONS. FOR LONGITUDINAL POST-TENSIONED CONNECTION SEE DETAIL A, THIS SHEET.

③ STEEL GIRDER SHOWN, AASHTO PRESTRESSED BEAMS ALLOWED.

④ TOP BARS TO HAVE STD 180° HOOK EACH END.

⑤ DESIGNER TO DETERMINE ANY ADDITIONAL LONGITUDINAL NEGATIVE MOMENT REINFORCEMENT REQUIRED.

⑥ DESIGNER TO VERIFY REINFORCEMENT SIZE AND SPACING.

NO.	DATE	BY	REMARKS

REVISIONS

UTAH DEPARTMENT OF TRANSPORTATION
SALT LAKE CITY, UTAH
STRUCTURES DIVISION

DESIGN — CHECK
DRAWN — CHECK
QUANT. — CHECK

APPROVAL RECOMM. — DATE — SENIOR DESIGN ENGR.
APPROVED FOR USE BY UDOT — DATE — UDOT BRIDGE ENGR.

ABC STANDARDS
FULL DEPTH PRECAST CONCRETE DECK PANEL
PRECAST PANEL REINFORCING
PROJECT NUMBER
PROJECT NUMBER

COUNTY
COUNTY

X-####
DRG. NO.

SHT. OF

$$date$$
$$file$$

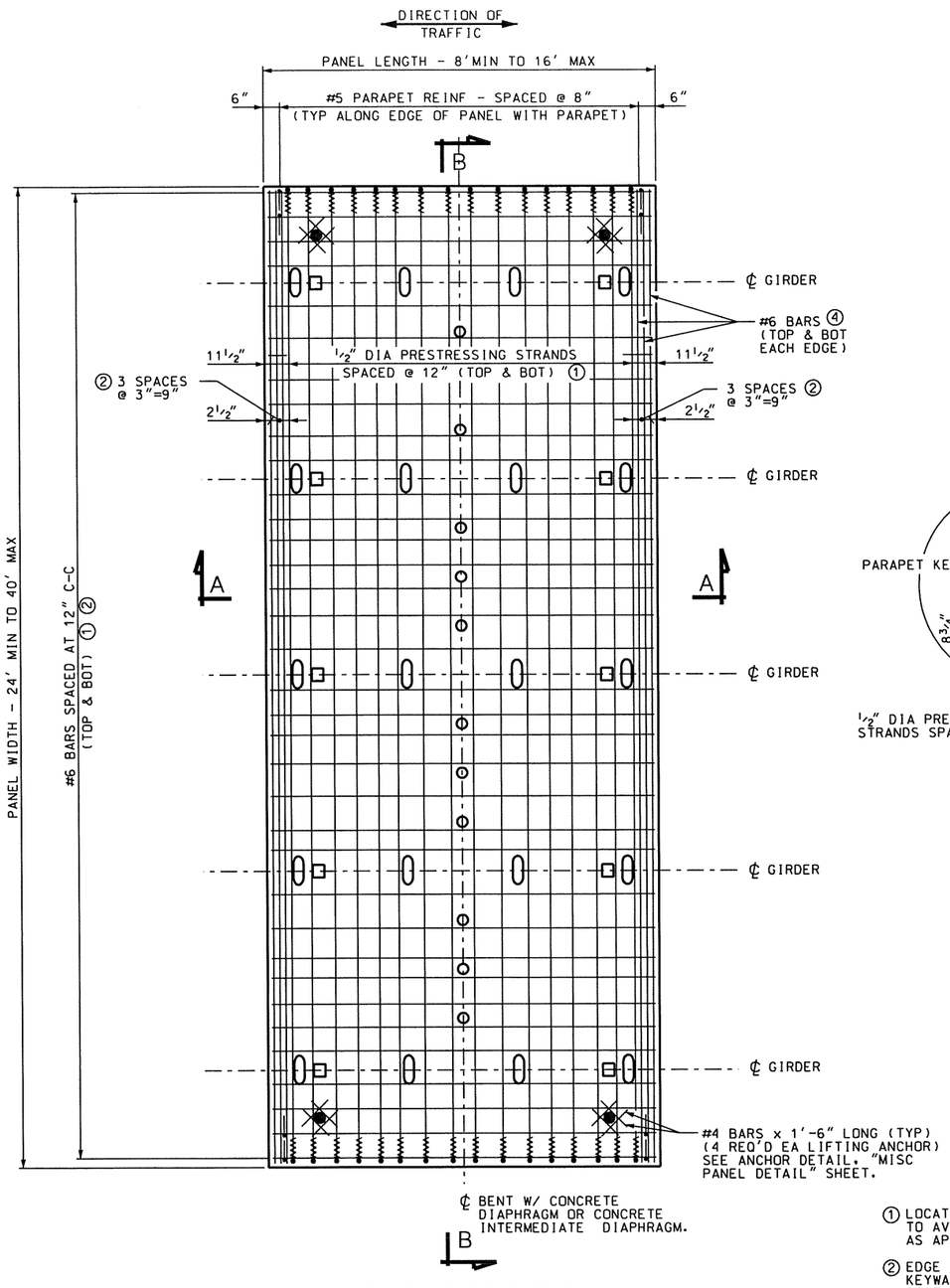

PANEL BLOCKOUT PLAN

SHOWING PANEL TYPE IBP# - SEE "TYPICAL PANEL PLAN" SHEET FOR OTHER PANEL TYPES.

SIZE OF PANEL, GIRDER NUMBER AND SPACING, AND OVERHANG FOR ILLUSTRATION ONLY. SEE GENERAL NOTES SHEET FOR ACTUAL USAGE LIMITS.

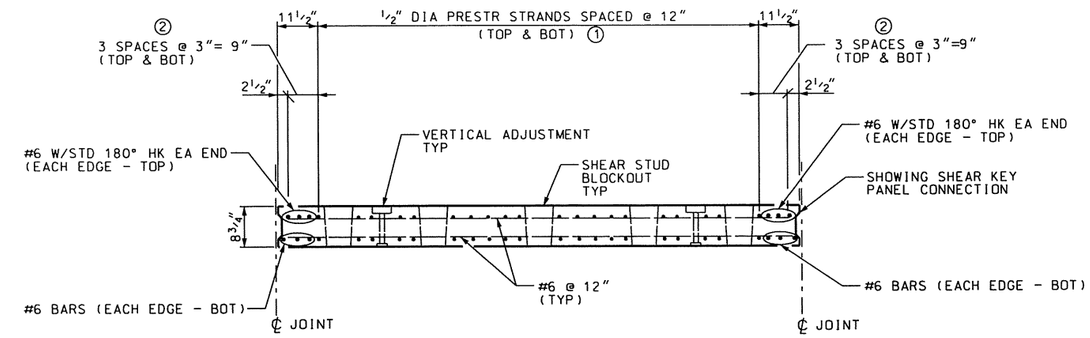

SECTION A-A

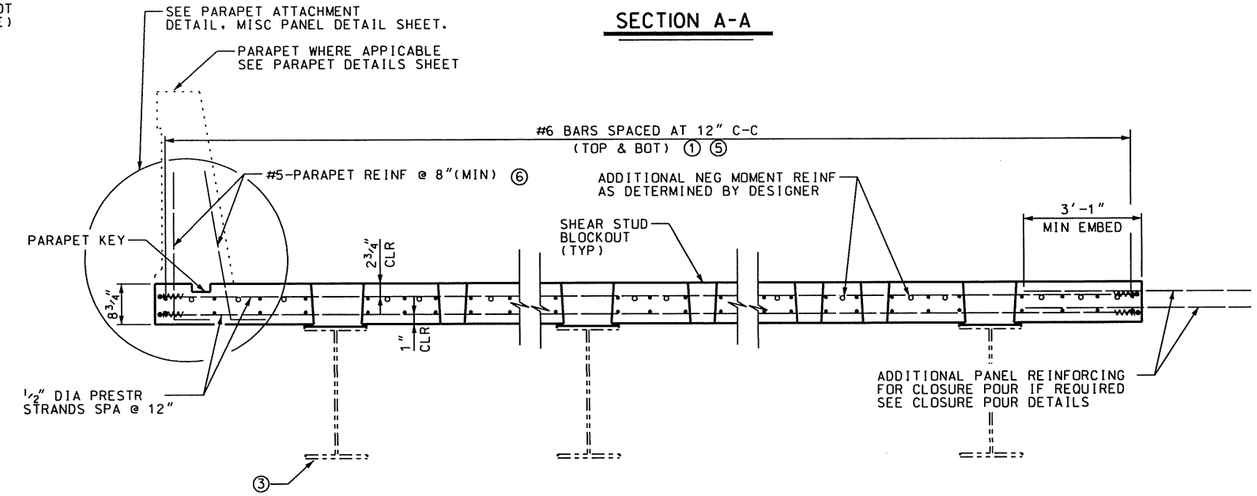

SECTION B-B

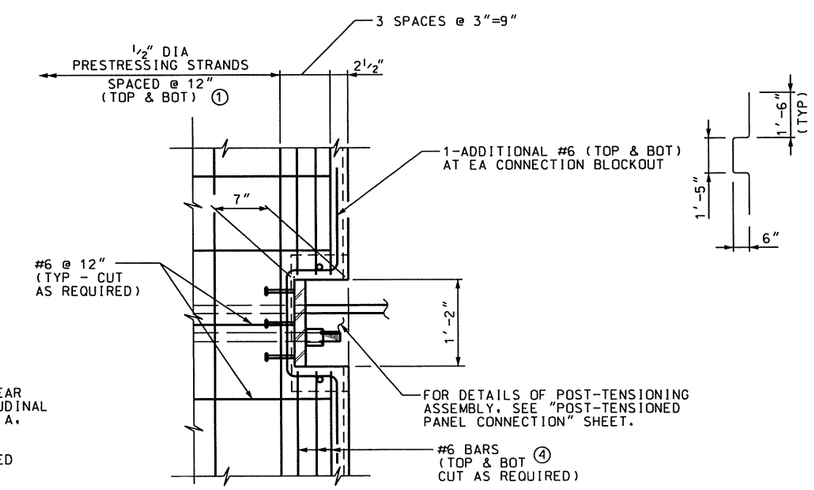

DETAIL A

① LOCATION OF BARS TO BE ADJUSTED TO AVOID CONFLICTS WITH BLOCKOUTS AS APPROVED BY DESIGNER.

② EDGE BARS SHOWN FOR WELDED TIE OR SHEAR KEYWAY TYPE CONNECTIONS. FOR LONGITUDINAL POST-TENSIONED CONNECTION SEE DETAIL A, THIS SHEET.

③ STEEL GIRDER SHOWN, AASHTO PRESTRESSED BEAMS ALLOWED.

④ TOP BARS TO HAVE STD 180° HOOK EACH END.

⑤ DESIGNER TO DETERMINE ANY ADDITIONAL LONGITUDINAL NEGATIVE MOMENT REINFORCEMENT REQUIRED.

⑥ DESIGNER TO VERIFY REINFORCEMENT SIZE AND SPACING.

NO.	DATE	BY	REMARKS

REVISIONS

UTAH DEPARTMENT OF TRANSPORTATION
SALT LAKE CITY, UTAH
STRUCTURES DIVISION

DESIGN — CHECK
DRAWN — CHECK
QUANT. — CHECK

APPROVAL RECOMM.: DATE — SENIOR DESIGN ENGR.
APPROVED FOR UDOT BY UDOT: DATE — UDOT BRIDGE ENGR.

ABC STANDARDS
FULL DEPTH PRECAST CONCRETE DECK PANEL
PRESTRESSED PANEL REINFORCING

PROJECT NUMBER
PROJECT NUMBER

COUNTY
COUNTY

X-####
DRG. NO.

SHT. OF

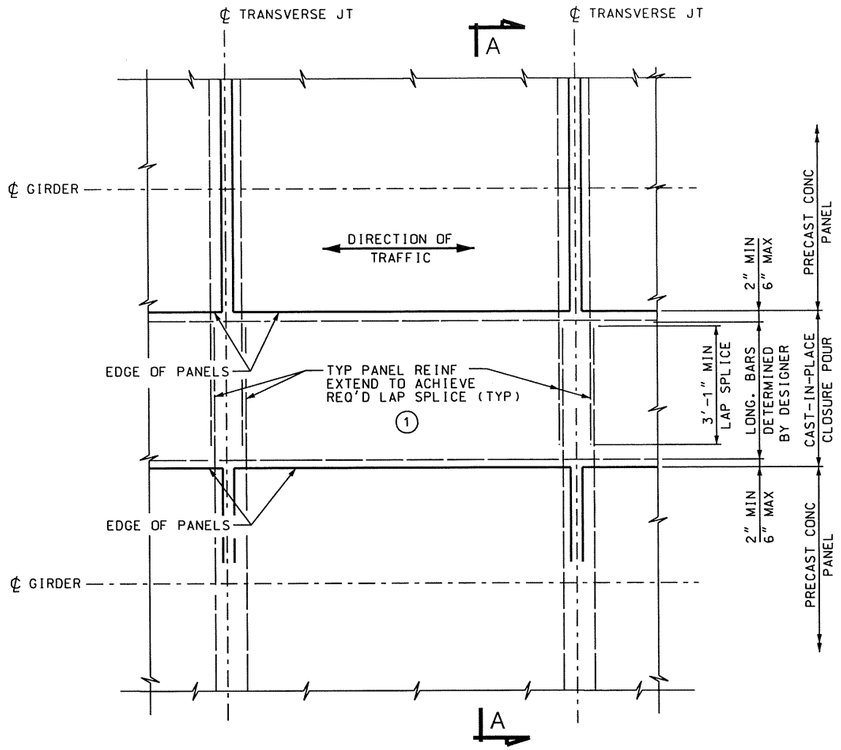

CLOSURE POUR PLAN

(PRECAST PANELS SHOWN - SEE CLOSURE POUR PART-PLAN FOR CLOSURE POUR USING PRESTRESSED PANELS)

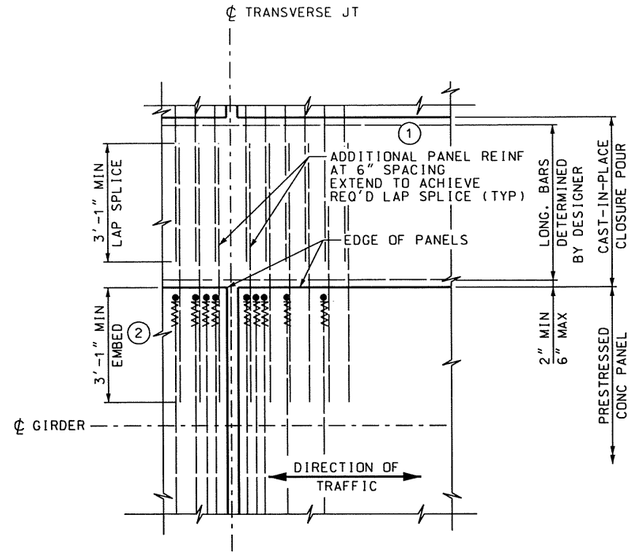

CLOSURE POUR PART-PLAN

(PRESTRESSED PANELS SHOWN)

1. MINIMUM REINFORCEMENT SHOWN. IT IS THE RESPONSIBILITY OF THE DESIGNER TO DETERMINE ACTUAL REINFORCEMENT REQUIRED.
2. AS AN ALTERNATIVE TO EMBEDDING BARS IN PRESTRESSED PANELS, THREADED INSERTS MAY BE ALLOWED AS DIRECTED BY THE DESIGNER. IN PRECAST PANEL WITHOUT PRESTRESSING, PANEL REINFORCEMENT, TOP AND BOTTOM, WILL BE CONTINUED INTO CLOSURE POUR.
3. PROTECT EXISTING REINFORCING BARS WHEN REMOVING THE PORTION OF EXISTING DECK. BEFORE MAKING THE CLOSURE POUR, ALL EXISTING REINFORCING IS TO BE CLEANED OF RUST AND FOREIGN MATERIAL. RECOAT BAR IF ORIGINAL WAS EPOXY COATED AND DAMAGED.
4. WHEN GIRDER SPACING EXCEEDS 7'-0" CONTRACTOR WILL SUPPLY FULL-LENGTH TEMPORARY SUPPORT TO THE PANEL OVERHANG AND CLOSURE POUR UNTIL CLOSURE POUR HAS GAINED FULL COMPRESSIVE STRENGTH.

CLOSURE POUR DETAILS SHOWN FOR MAXIMUM BEAM SPACING OF 10'-0". AT A MINIMUM, EXTEND CONTINUOUS REINFORCEMENT, TOP AND BOTTOM, FROM PRECAST PANEL, #6 AT 6" SPACING INTO CLOSURE POUR.

FOR BEAM SPACINGS GREATER THAN 10'-0", DESIGNER WILL DESIGN AND DETAIL CLOSURE POUR AND APPROPRIATE POST-TENSIONING AS REQUIRED.

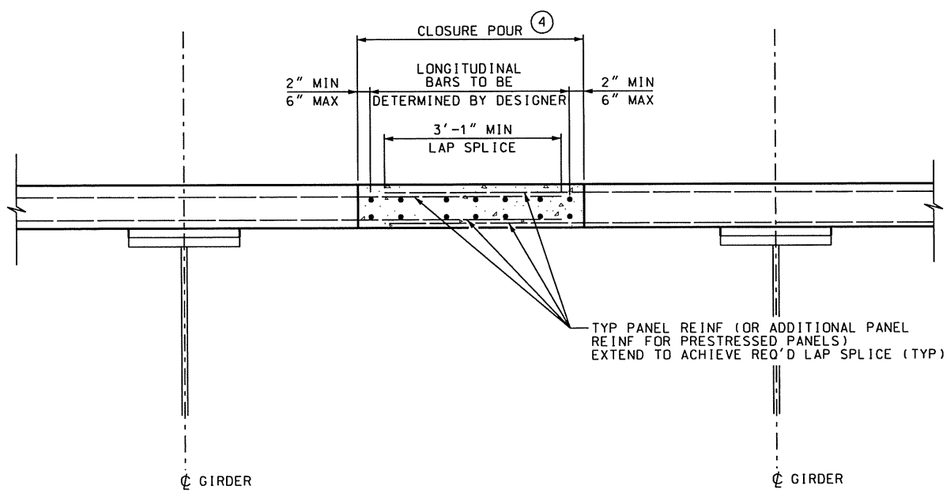

SECTION A-A

(SHOWING STEEL GIRDERS)

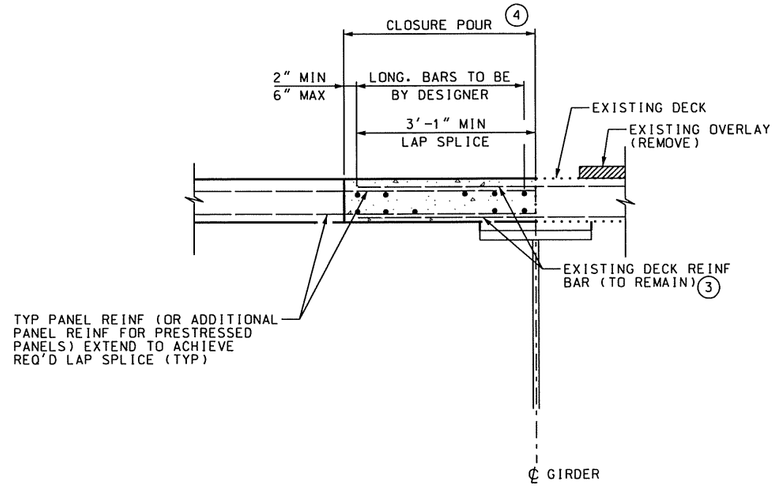

CONTRACTOR TO SUPPLY FULL-LENGTH TEMPORARY SUPPORT, AS DIRECTED BY THE ENGINEER, TO THE PANEL OVERHANG AT THE CLOSURE POUR UNTIL THE CLOSURE POUR HAS GAINED FULL COMPRESSIVE STRENGTH.

CLOSURE POUR TO EXISTING DECK SECTION

(SHOWING STEEL GIRDERS)

NO.	DATE	BY	REMARKS

REVISIONS

UTAH DEPARTMENT OF TRANSPORTATION
SALT LAKE CITY, UTAH
STRUCTURES DIVISION

DESIGN ____ CHECK ____
DRAWN ____ CHECK ____
QUANT. ____ CHECK ____

APPROVAL RECOMM. ____ DATE ____ SENIOR DESIGN ENGR.
APPROVED FOR USE BY UDOT ____ DATE ____ UDOT BRIDGE ENGR.

ABC STANDARDS
FULL DEPTH CONC DECK PANEL
CLOSURE POUR DETAILS
PROJECT NUMBER
PROJECT NUMBER

COUNTY
COUNTY

X-####
DRG. NO.

SHT. OF

NOTES

1. INCLUDE COST OF SHEAR STUDS IN PAY ITEM "PRESTRESSED CONCRETE DECK PANEL".
2. INCLUDE COST OF ALL NON-SHRINK GROUT IN PAY ITEM "PRESTRESSED CONCRETE DECK PANEL".
3. TOP SURFACE OF DECK AND INSIDE FACE OF SHEAR BLOCKOUTS WILL HAVE A HEAVY BROOM FINISH.

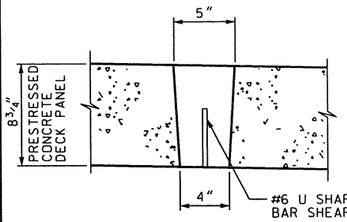

SECTION A-A

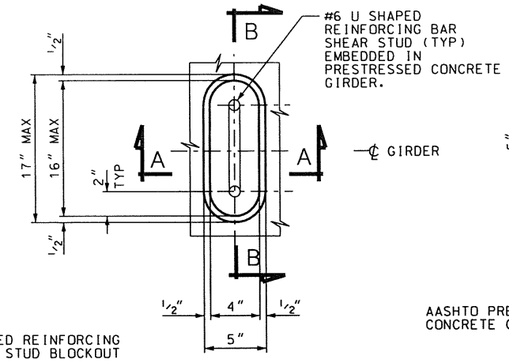

U SHAPED REINFORCING BAR SHEAR STUD BLOCKOUT PLAN

(OVER GIRDERS)

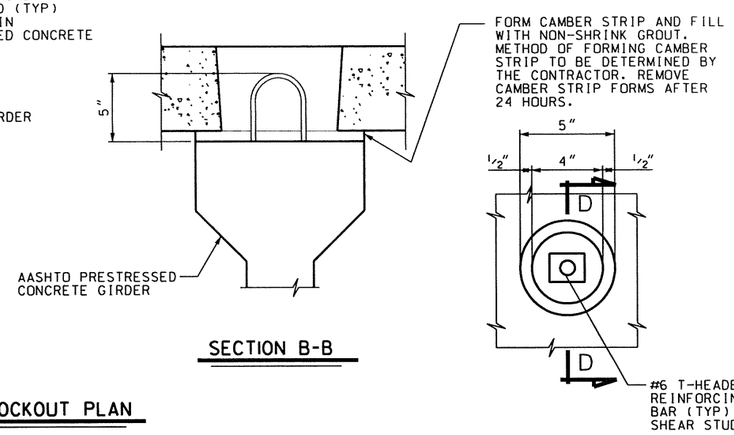

SECTION B-B

T-HEADED SHEAR STUD BLOCKOUT PLAN

(OVER INTERMEDIATE DIAPHRAGMS ONLY)

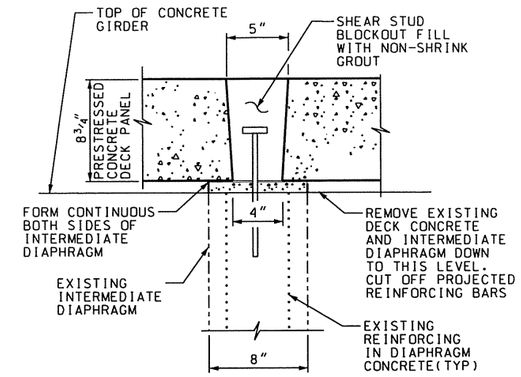

SECTION D-D

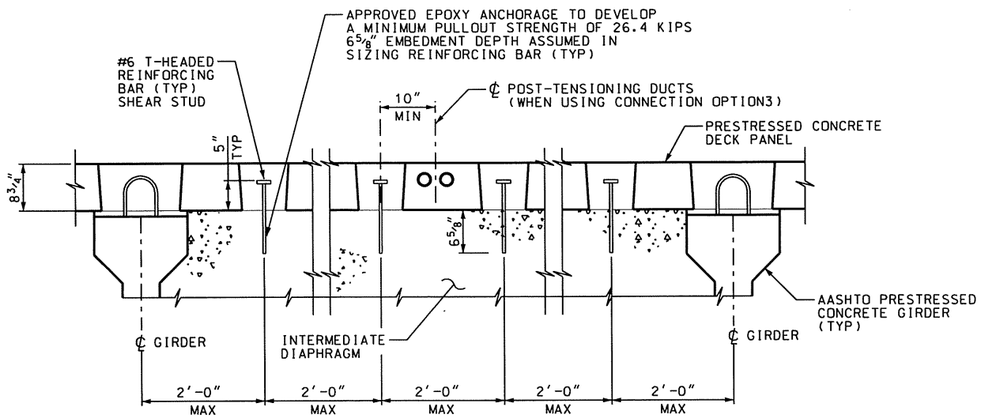

INTERMEDIATE DIAPHRAGM ELEVATION - NEW CONSTRUCTION

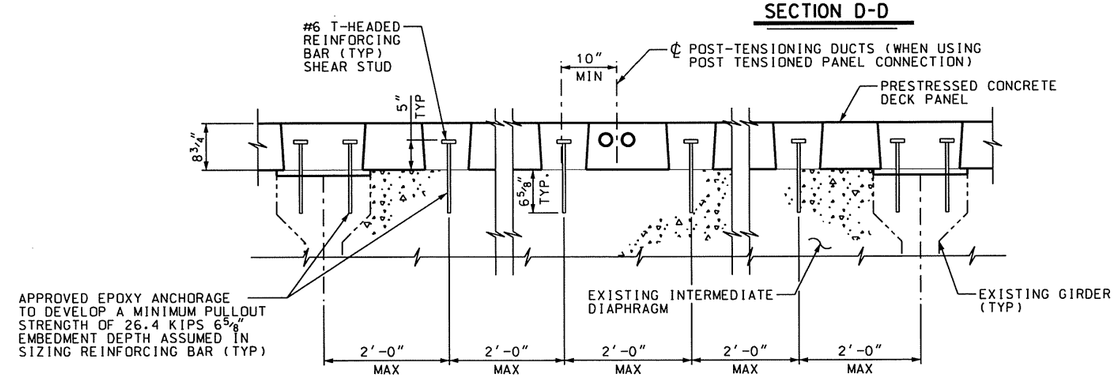

INTERMEDIATE DIAPHRAGM ELEVATION - EXISTING CONSTRUCTION

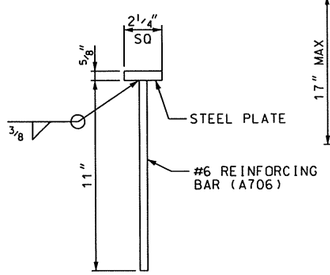

STUD DETAIL

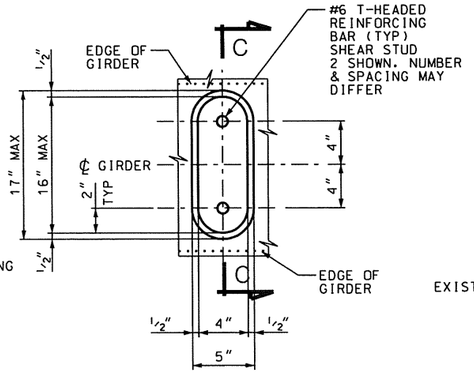

T-HEADED SHEAR STUD BLOCKOUT PLAN

(OVER GIRDERS ONLY)

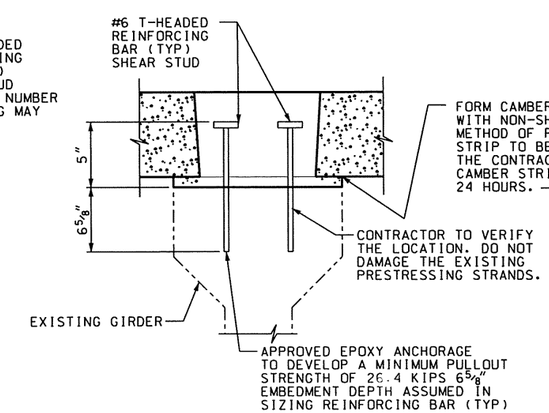

SECTION C-C

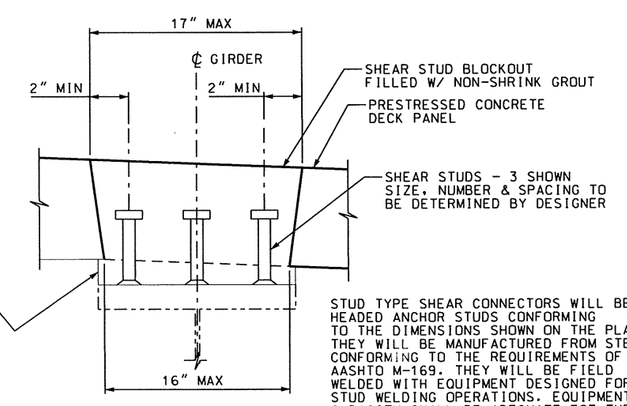

STUD TYPE SHEAR CONNECTORS WILL BE HEADED ANCHOR STUDS CONFORMING TO THE DIMENSIONS SHOWN ON THE PLANS. THEY WILL BE MANUFACTURED FROM STEEL CONFORMING TO THE REQUIREMENTS OF AASHTO M-169. THEY WILL BE FIELD WELDED WITH EQUIPMENT DESIGNED FOR STUD WELDING OPERATIONS. EQUIPMENT CAPACITY SHALL BE ADEQUATE FOT THE SIZE OF STUD BEING WELDED.

SHEAR STUD DETAIL

(STEEL GIRDER)

NO.	DATE	BY	REMARKS

REVISIONS

UTAH DEPARTMENT OF TRANSPORTATION
SALT LAKE CITY, UTAH
STRUCTURES DIVISION

DESIGN — CHECK
DRAWN — CHECK
QUANT. — CHECK
APPROVAL RECOMM. — DATE — SENIOR DESIGN ENGR.
APPROVED FOR USE BY UDOT — DATE — UDOT BRIDGE ENGR.

ABC STANDARDS
FULL DEPTH CONC DECK PANEL
SHEAR STUD BLOCKOUT DETAILS

PROJECT NUMBER
PROJECT NUMBER

COUNTY
COUNTY

X-####
DRG. NO.

SHT. OF

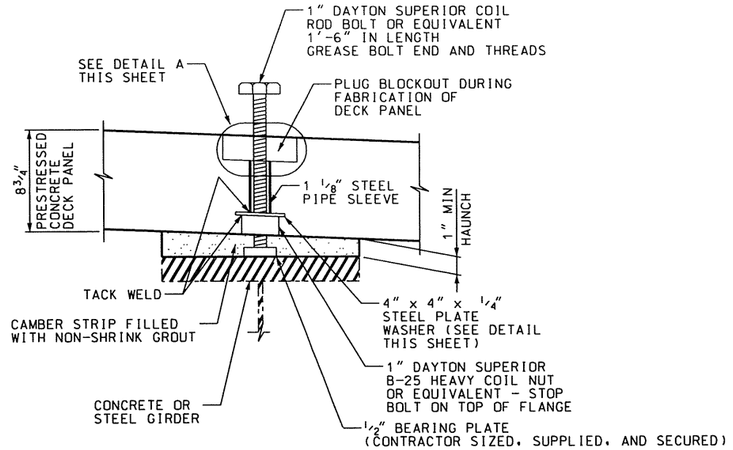

VERTICAL ADJUSTMENT DETAIL

(STEEL GIRDER SHOWN)

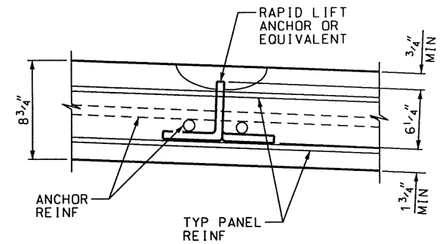

ANCHOR ELEVATION

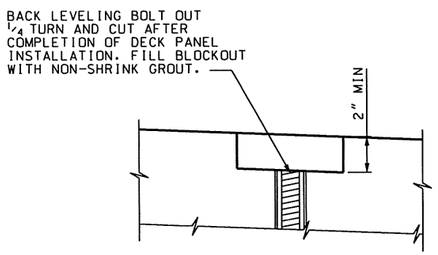

DETAIL A

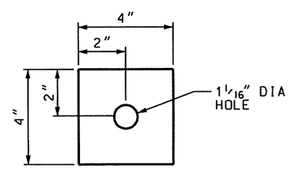

WASHER DETAIL

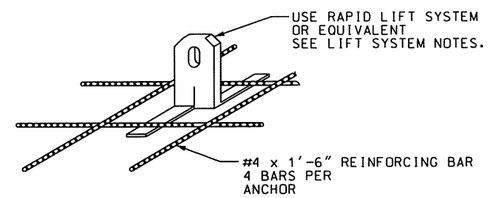

LIFT SYSTEM NOTES:

1. USE RAPID LIFT SYSTEM WITH ALLOWABLE TENSION LOAD OF 12,000 LBS OR EQUIVALENT.
2. USE A RECESSING MEMBER ASSEMBLY.
3. PLACE LIFTING DEVICES A MINIMUM DISTANCE OF 2 FT FROM THE EDGES.
4. CONTRACTOR IS RESPONSIBLE FOR LOCATION OF THE LIFT SYSTEM AND WILL SUBMIT PLANS AND HANDLING STRESS CALCULATIONS TO THE ENGINEER FOR APPROVAL PRIOR TO CONSTRUCTION OF PANELS.

ANCHOR DETAIL

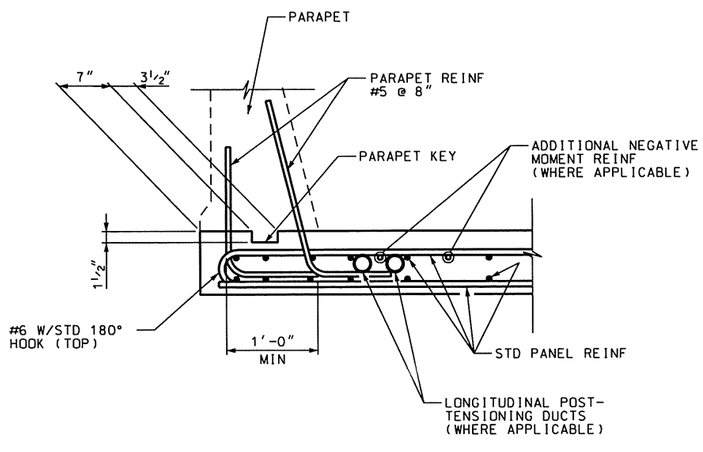

PARAPET CONNECTION DETAIL

NO.	DATE	BY	REMARKS

REVISIONS

UTAH DEPARTMENT OF TRANSPORTATION
SALT LAKE CITY, UTAH
STRUCTURES DIVISION

DESIGN ____ CHECK ____
DRAWN ____ CHECK ____
QUANT. ____ CHECK ____

APPROVAL RECOMM. ____ DATE ____ SENIOR DESIGN ENGR.
APPROVED FOR USE BY UDOT ____ DATE ____ UDOT BRIDGE ENGR.

ABC STANDARDS
FULL DEPTH CONC DECK PANEL
MISC PANEL DETAILS

PROJECT NUMBER
PROJECT NUMBER

COUNTY
COUNTY

X-####
DRG. NO.

SHT. OF

$$Date$$ $$File$$

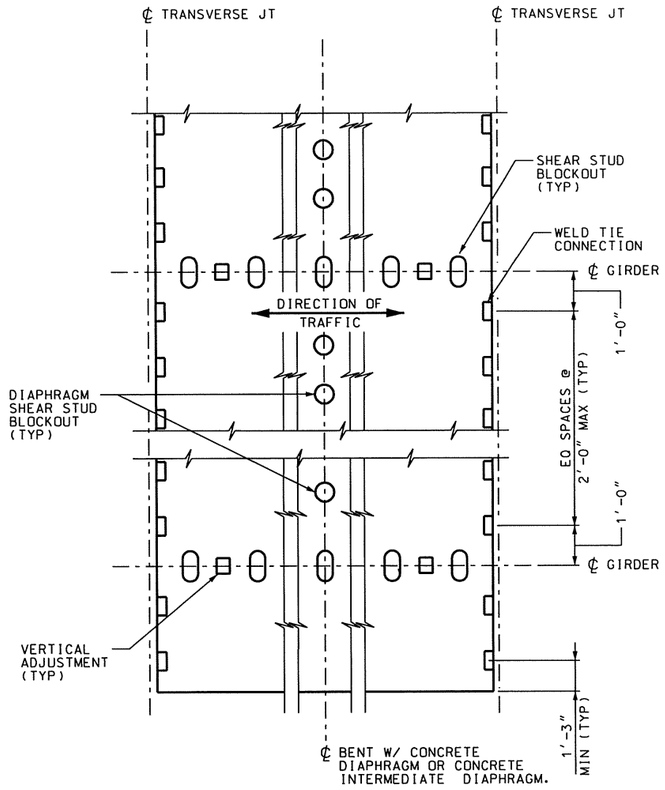

PANEL BLOCKOUT PLAN

SHOWING CLEARANCES REQUIRED TO CONNECTION WELD TIE

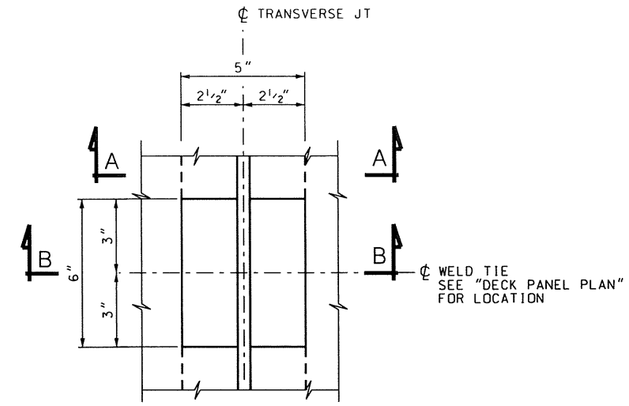

WELD TIE CONNECTION PLAN

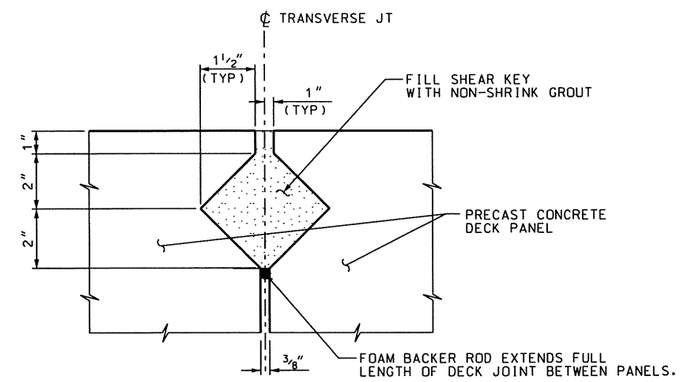

SECTION A-A

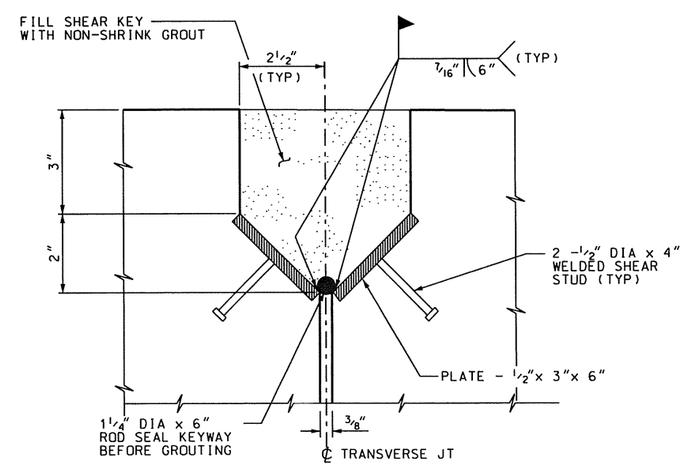

SECTION B-B

NOTES:

1. ALL JOINT SURFACES WILL HAVE A HEAVY BROOM FINISH.
2. WELD TIE CONNECTION WILL BE USED ONLY FOR SINGLE SPAN STRUCTURES WITH A PROJECTED LIFE-SPAN LESS THAN 10 YEARS.

SEQUENCE OF CONSTRUCTION

1. PLACE PANELS
2. ADJUST TO REQUIRED GRADE
3. FIELD WELD TIE ROD
4. CHECK GRADE AND ADJUST
5. GROUT AND ALLOW TO CURE FOR MINIMUM OF 24 HOURS:
   A. BETWEEN CAMBER STRIPS
   B. TRANSVERSE JOINT
   C. SHEAR BLOCKOUTS
6. REMOVE CAMBER STRIPS AND LEVELING BOLTS
7. CHECK FOR VOIDS VIA VISUAL AND TAPPING METHODS
8. IF VOIDS ARE FOUND REPAIR PER UDOT APPROVED METHOD
9. GROUT LEVELING BOLTS AND AT LIFTING DEVICES.
10. GRIND SURFACE AS REQUIRED
11. APPLY THIN BONDED POLYMER OVERLAY

THIS WELD TIE CONNECTION WILL BE USED ONLY WITH WRITTEN AUTHORIZATION FROM THE UTAH DEPARTMENT OF TRANSPORTATION. LETTER OF AUTHORIZATION WILL BE INCLUDED WITH ALL PLAN SET SUBMITTALS CALLING FOR THIS CONNECTION OPTION.

NO.	DATE	BY	REMARKS

REVISIONS

UTAH DEPARTMENT OF TRANSPORTATION
SALT LAKE CITY, UTAH
STRUCTURES DIVISION

DESIGN ____ CHECK ____
DRAWN ____ CHECK ____
QUANT. ____ CHECK ____

APPROVAL RECOMM. ____ DATE ____ SENIOR DESIGN ENGR.
APPROVED FOR USE BY UDOT ____ DATE ____ UDOT BRIDGE ENGR.

ABC STANDARDS
FULL DEPTH PRECAST CONCRETE DECK PANEL
WELD TIE PANEL CONNECTION
PROJECT NUMBER ____ PROJECT NUMBER

COUNTY
COUNTY

X-####
DRG. NO.

SHT. OF

ssfiles

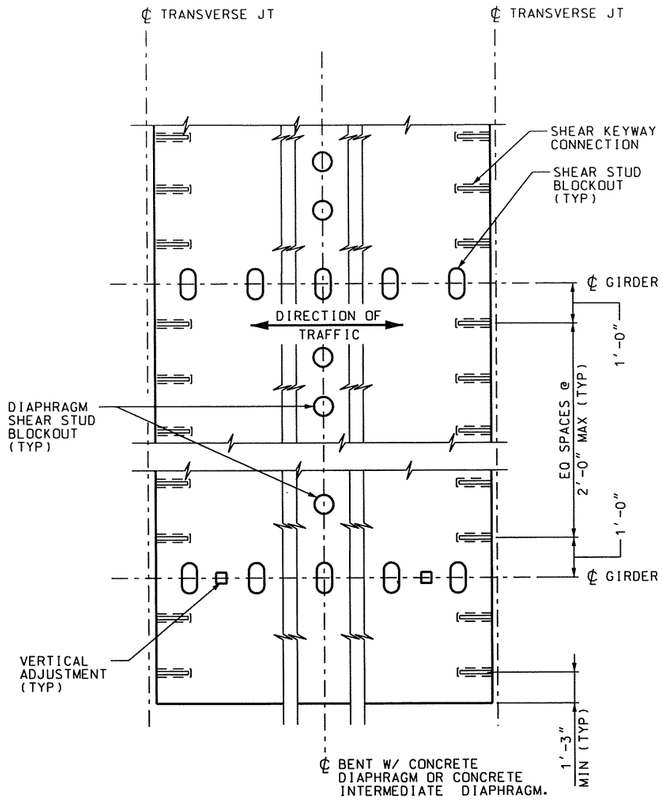

PANEL BLOCKOUT PLAN

SHOWING CLEARANCES REQUIRED TO CONNECTION SHEAR KEYWAYS

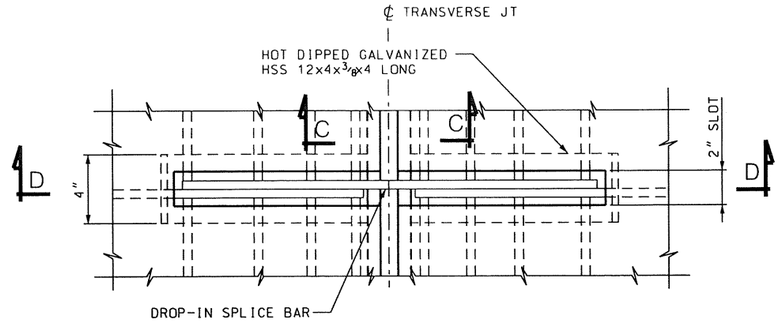

SHEAR KEYWAY CONNECTION PLAN

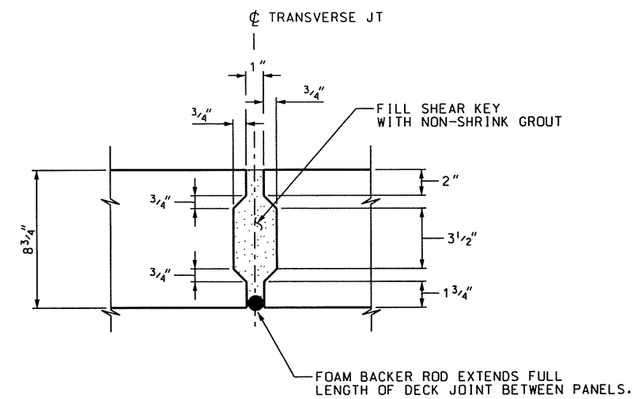

SECTION C-C

NOTES:

1. ALL JOINT SURFACES WILL HAVE A HEAVY BROOM FINISH.
2. SHEAR KEYWAY CONNECTION WILL BE USED ONLY FOR SINGLE SPAN STRUCTURES WITH A PROJECTED LIFE-SPAN OF 15 YEARS OR LESS.

SEQUENCE OF CONSTRUCTION

1. PLACE PANELS
2. ADJUST TO REQUIRED GRADE
3. DROP IN BAR AND TIE TO EXISTING LONGITUDINAL REINFORCEMENT
4. CHECK GRADE AND ADJUST
5. GROUT AND ALLOW TO CURE FOR MINIMUM OF 24 HOURS:
   A. BETWEEN CAMBER STRIPS
   B. TRANSVERSE JOINT
   C. SHEAR BLOCKOUTS
6. REMOVE CAMBER STRIPS AND LEVELING BOLTS
7. CHECK FOR VOIDS VIA VISUAL AND TAPPING METHODS
8. IF VOIDS ARE FOUND REPAIR PER UDOT APPROVED METHOD
9. GROUT LEVELING BOLTS AND AT LIFTING DEVICES.
10. GRIND SURFACE AS REQUIRED
11. APPLY THIN BONDED POLYMER OVERLAY

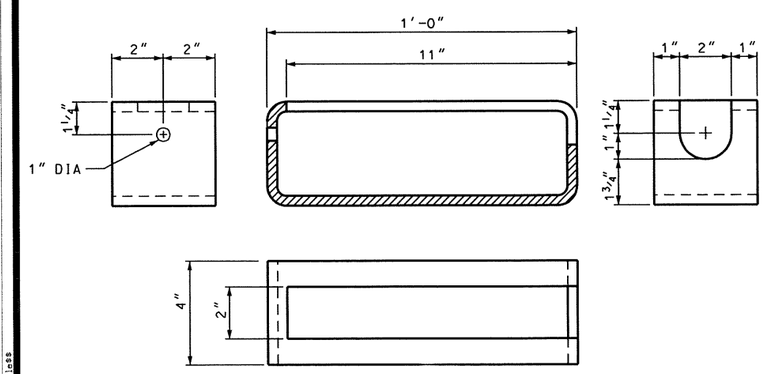

HOLLOW STRUCTURAL SECTION DETAIL

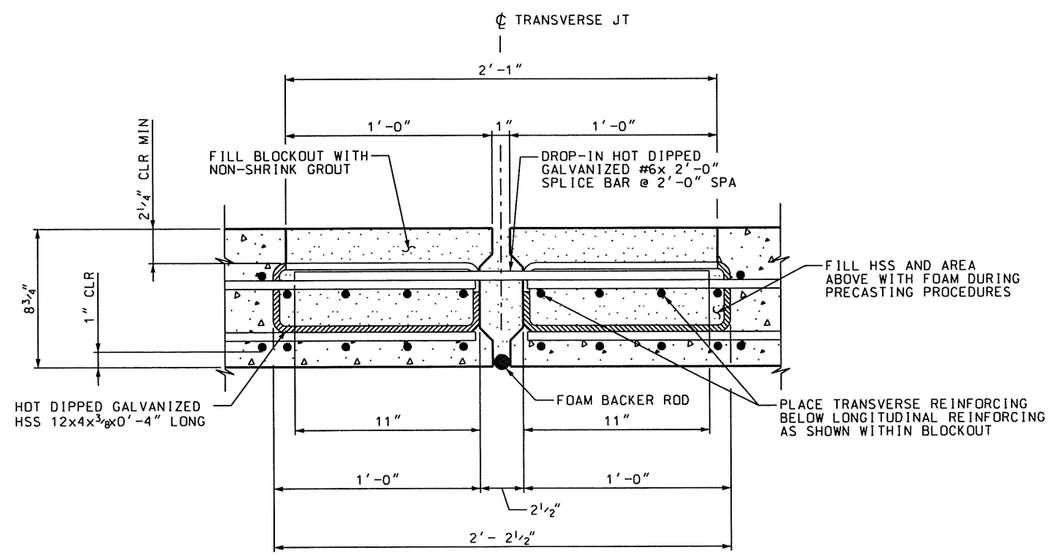

SECTION D-D

NO.	DATE	BY	REMARKS

REVISIONS

UTAH DEPARTMENT OF TRANSPORTATION
SALT LAKE CITY, UTAH
STRUCTURES DIVISION

DESIGN ____ CHECK ____
DRAWN ____ CHECK ____
QUANT. ____ CHECK ____

APPROVAL RECOMM. ____ DATE ____ SENIOR DESIGN ENGR.
APPROVED FOR USE BY UDOT ____ DATE ____ UDOT BRIDGE ENGR.

ABC STANDARDS

FULL DEPTH PRECAST CONCRETE DECK PANEL

SHEAR KEY PANEL CONNECTION

PROJECT NUMBER ____ PROJECT NUMBER

COUNTY
COUNTY

X-####
DRG. NO.

SHT. OF

SSFILES
SSDATES

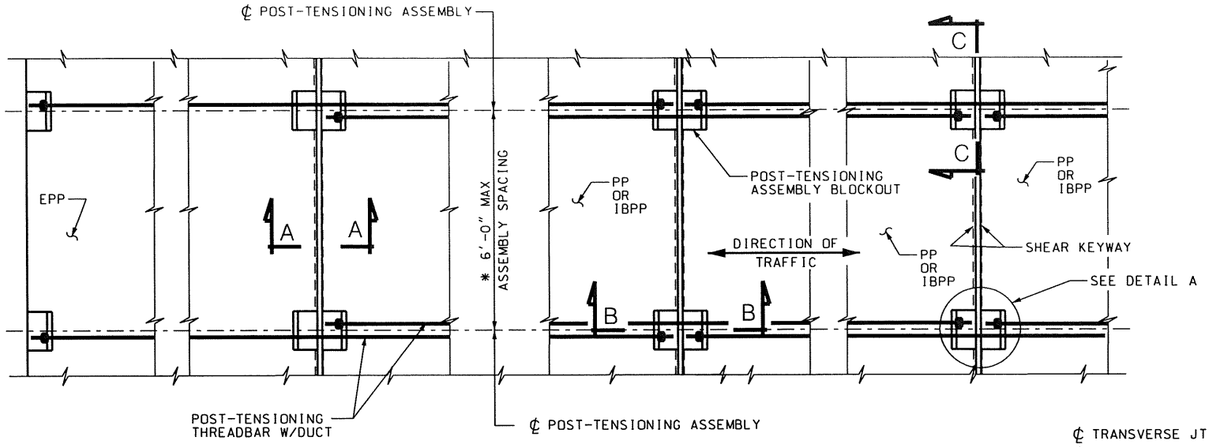

PANEL CONNECTION PLAN

NOTES:

1. POST-TENSIONING ASSEMBLY: (ORDER OF ASSEMBLY)
   A) WELD BOTTOM PLATE TO ANCHOR PLATE.
   B) WELD SHEAR STUDS TO ANCHOR PLATE AND BOTTOM PLATE.
   C) GALVANIZE ASSEMBLY PER UDOT SPECIFICATIONS.
2. POST -TENSIONING SHALL APPLY AN AVERAGE OF 30.6 KIPS PER FOOT OF TRANSVERSE JOINT OR 300 PSI AFTER LOSSES.
3. POST-TENSIONING SHALL BE COMPLETED PER UDOT SPECIFICATION.
4. POST TENSIONED CONNECTION WILL BE USED FOR ALL MULTI-SPAN STRUCTURES OR FOR ALL STRUCTURES WITH A PROJECTED LIFE-SPAN GREATER THAN 15 YEARS.

* FOR MULTI-SPAN CONTINUOUS DECK SYSTEMS. THE DESIGNER IS TO DETERMINE SPACING AND SIZE OF POST-TENSIONING MEMBERS.

SEQUENCE OF CONSTRUCTION

1. PLACE FIRST TWO PANELS
2. ADJUST TO REQUIRED GRADE
3. GROUT SHEAR KEYWAY BETWEEN PT-ASSEMBLY BLOCKOUTS (SECTION A-A)
4. POST-TENSION
5. ADD NEXT PANEL
6. REPEAT STEPS 2 THROUGH 5 UNTIL ALL PANELS HAVE BEEN PLACED
7. CHECK GRADE AND ADJUST
8. GROUT AND ALLOW TO CURE FOR MINIMUM OF 24 HOURS:
   A. BETWEEN CAMBER STRIPS
   B. TRANSVERSE JOINT
   C. SHEAR BLOCKOUTS
9. REMOVE CAMBER STRIPS AND LEVELING BOLTS
10. CHECK FOR VOIDS VIA VISUAL AND TAPPING METHODS
11. IF VOIDS ARE FOUND REPAIR PER UDOT APPROVED METHOD
12. GROUT LEVELING BOLTS AND AT LIFTING DEVICES.
13. GRIND SURFACE AS REQUIRED
14. APPLY THIN BONDED POLYMER OVERLAY

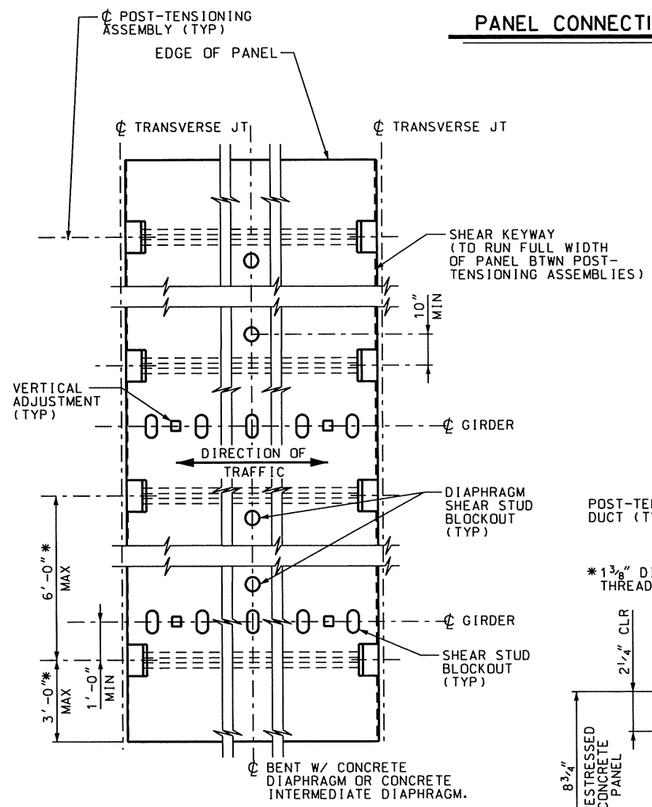

PANEL BLOCKOUT PLAN

SHOWING CLEARANCES REQUIRED TO POST-TENSIONING ASSEMBLIES

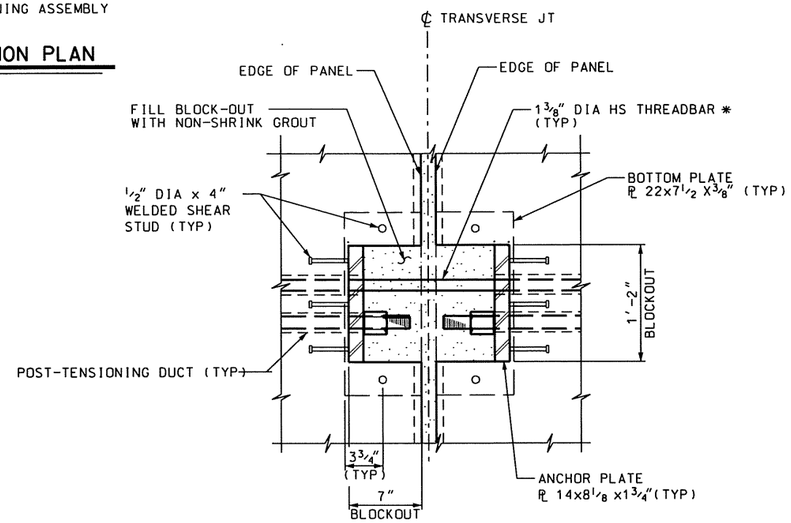

DETAIL A

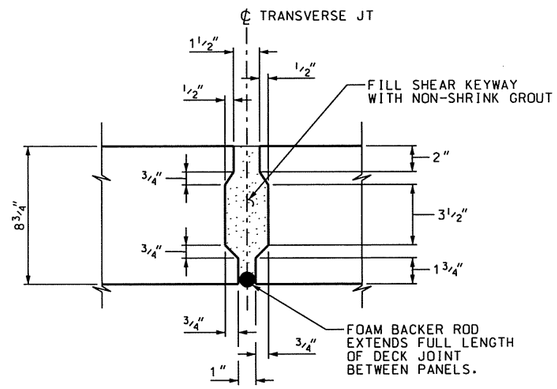

SECTION A-A

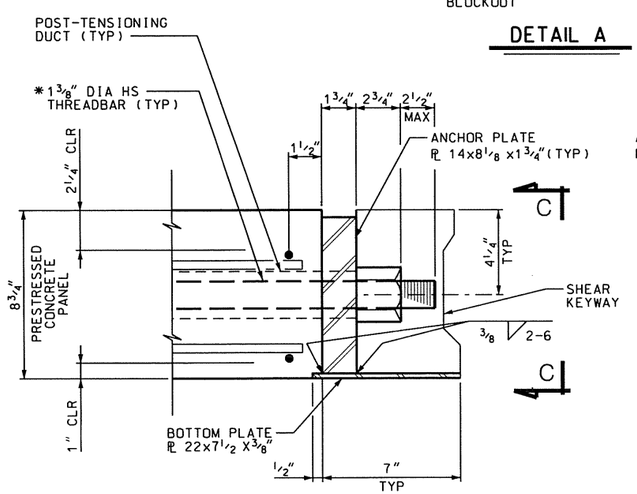

HALF SECTION B-B

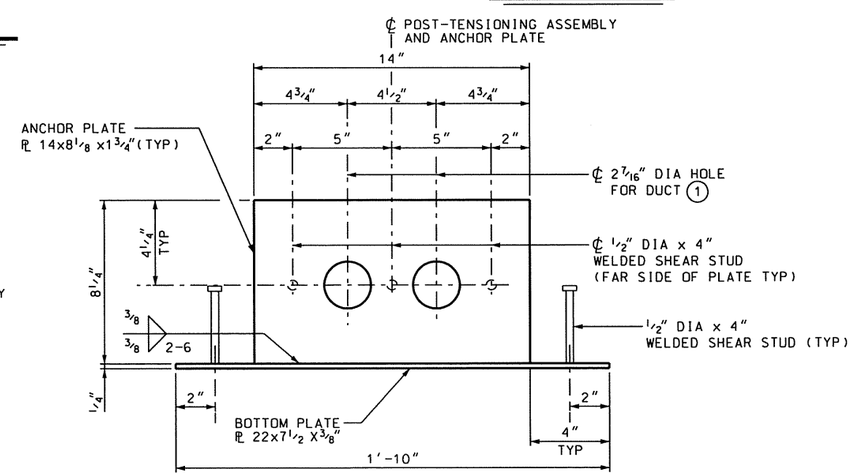

ELEVATION C-C

SHOWING ANCHOR AND BOTTOM PLATES

(1) SIZE MAY BE MODIFIED BY CONTRACTOR TO FIT PROPRIETARY SYSTEM.

NO.	DATE	BY	REMARKS

REVISIONS

UTAH DEPARTMENT OF TRANSPORTATION
SALT LAKE CITY, UTAH
STRUCTURES DIVISION

DESIGN — CHECK
DRAWN — CHECK
QUANT. — CHECK

APPROVAL RECOMM. — DATE — SENIOR DESIGN ENGR.
APPROVED FOR USE BY UDOT — DATE — UDOT BRIDGE ENGR.

ABC STANDARDS
FULL DEPTH CONC DECK PANEL
POST TENSIONED PANEL CONNECTION

PROJECT NUMBER
PROJECT NUMBER

COUNTY
COUNTY

X-####
DRG. NO.

SHT. OF

NOTES

1. EXTEND SEALANT AND FOAM BACKER ROD FROM DECK TOP TO TOP OF PARAPET ON THE INSIDE PARAPET FACE, AND ACROSS TOP OF PARAPET.
2. ADJUST BAR SPACING AS REQUIRED TO NOT EXCEED MAXIMUM SPACING SHOWN.
3. FOR END DETAILS OF PARAPET, SEE "PARAPET END DETAILS" SHEET.
4. VALID FOR TL-4.

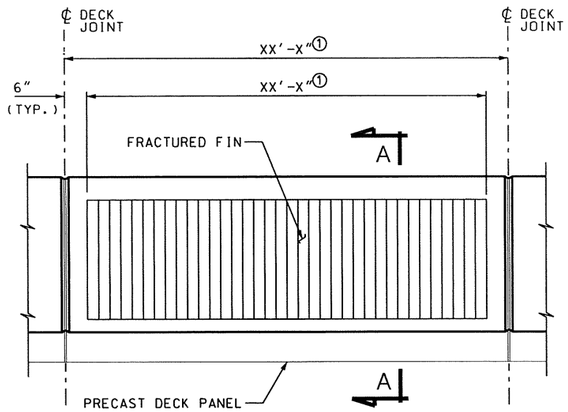

ELEVATION

① LENGTH BASED ON PRECAST DECK PANEL LENGTH AS DETERMINED BY DESIGNER.

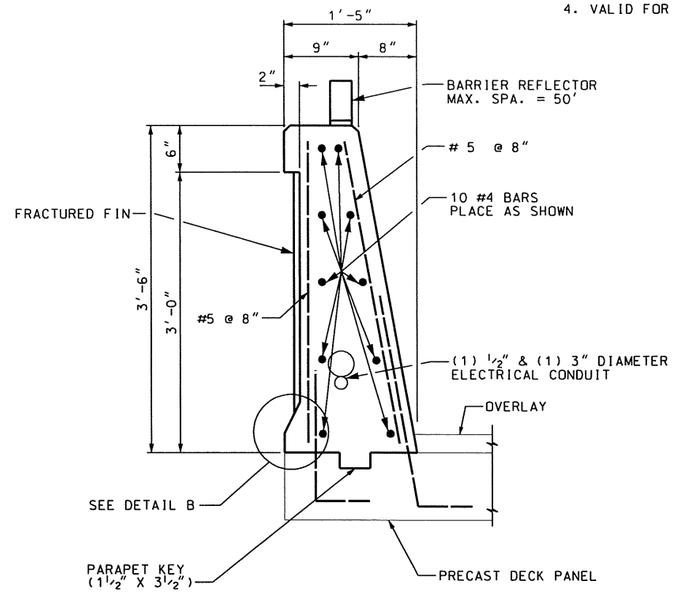

SECTION A-A

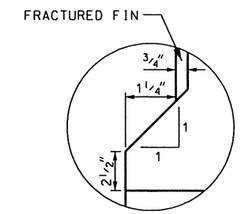

DETAIL B

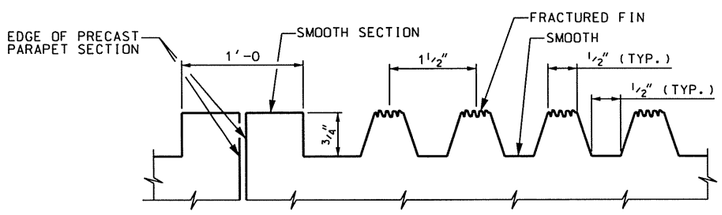

FRACTURED FIN DETAIL

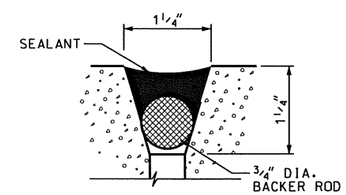

JOINT DETAIL

QUANTITIES

PRECAST CONCRETE PARAPETS*	XX.X CU.YD.

* FOR INFORMATION ONLY. PAID FOR IN PRECAST CONCRETE DECK PANEL PAY ITEM.

REVISIONS

NO.	DATE	BY	REMARKS

UTAH DEPARTMENT OF TRANSPORTATION
SALT LAKE CITY, UTAH
STRUCTURES DIVISION

DESIGN ____ CHECK ____
DRAWN ____ CHECK ____
QUANT. ____ CHECK ____

APPROVAL RECOMM. ____ DATE ____ SENIOR DESIGN ENGR.
APPROVED FOR USE BY UDOT ____ DATE ____ UDOT BRIDGE ENGR.

ABC STANDARDS
FULL DEPTH PRECAST CONCRETE DECK PANEL
PARAPET DETAILS

PROJECT NUMBER ____ PROJECT NUMBER

COUNTY
COUNTY

X-####
DRG. NO.

SHT. OF

$$files$$
$$docs$$