T 312

STANDARD METHOD OF TEST FOR PREPARING AND DETERMINING THE DENSITY OF THE HOT MIX ASPHALT (HMA) SPECIMENS BY MEANS OF THE SUPERPAVE GYRATORY COMPACTOR

FOP FOR AASHTO T 312

T 312

STANDARD METHOD OF TEST FOR PREPARING AND DETERMINING THE DENSITY OF THE HOT MIX ASPHALT (HMA) SPECIMENS BY MEANS OF THE SUPERPAVE GYRATORY COMPACTOR

FOP FOR AASHTO T 312

STANDARD METHOD OF TEST FOR PREPARING AND DETERMINING THE DENSITY OF THE HOT MIX ASPHALT (HMA) SPECIMENS BY MEANS OF THE SUPERPAVE GYRATORY COMPACTOR

FOP FOR AASHTO T 312

02

Scope

The Superpave gyratory compactor (SGC) is used to compact cylindrical specimens of hot-mix asphalt (HMA) by means of gyrations under a specified compressive stress and angle of inclination.

03

Significance

The procedure covers preparing specimens for determining the mechanical and volumetric properties of HMA. This procedure may also be used for field control of an HMA production process.

04

Apparatus

- Superpave Gyratory Compactor, with height measurement and recording device
- Molds, 150mm inside diameter and 250mm minimum height at room temperature
- Chute
- Scale
- Oven
- Miscellaneous

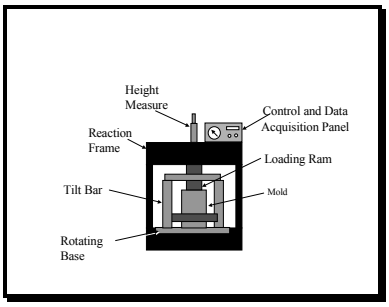

05

Gyratory Components

Refer to AASHTO T 312

- Reaction Frame
- Rotating base and Motor
- Loading System
  - Ram and Pressure gauge
- Height measure and recordation
- Molds, plates, etc.

06

Standardization

Calibration should be periodically verified on:

- Ram pressure (semi-annually)
- Angle of gyration (semi-annually)
- Gyration frequency (semi-annually)
- Height measure (semi-annually)
- Mold and plates (annually)

Angle of gyration refers to the effective internal angle. Internal angle is the angle formed between the internal mold diameter and a mold end plate, as a mold is gyrated in an SGC.

Effective internal angle is the average of the top and bottom angles and is verified according to AASHTO TP 71.

07 **Equipment Preparation**

Equipment preparation should be performed in accordance with manufacturer's recommendations, these should include:

- Warm-up equipment
- Verify settings
  - Angle
  - Pressure
  - Number of gyrations
- Lubricate bearing surfaces
- Prepare recording device
- Pre-heat molds and plates at compaction temperature (minimum of 30 min.)
- Pre-heat chute, spatulas and other apparatus (not to exceed compaction temperature, but may be lower to prevent damaging equipment)

08 **Sample Preparation**

Laboratory Prepared HMA

If laboratory mixed, prepare in accordance with the FOP for AASHTO R 30. If the specimens are to be used for the determination of volumetric properties, the sample size should be adjusted to result in a compacted specimen that is 115 ±5mm at the desired number of gyrations. It may be necessary to produce a trial specimen to determine the approximate testing size.

Plant produced HMA

Sample should be obtained in accordance with T 168 and reduced to testing size in accordance with R 47. The sample shall be brought to the compaction temperature range by careful, uniform heating in an oven immediately prior to molding.

Compaction Procedure

Superpave gyratory compactors may be different from that shown. Follow the manufacturers recommended loading procedure. This may require the steps performed in an order other than that discussed, i.e. the mold may be placed in a Pine / Brovold compactor prior to material being loaded into the mold.

09

1. Remove pre-heated mold and plate(s) from the oven.
2. Place base plate and paper disc in bottom of mold.

Note: Ensure plate(s) are correctly placed in the mold.

10

3. Mix sample with a heated spatula until it appears homogeneous.

11

4. Pour the mix into the mold all at once (care should be taken to avoid segregation or loss of material).

12

5. Level the mix in the mold.
6. Place a paper disc and the heated top-plate (if required) on top of leveled sample.

13

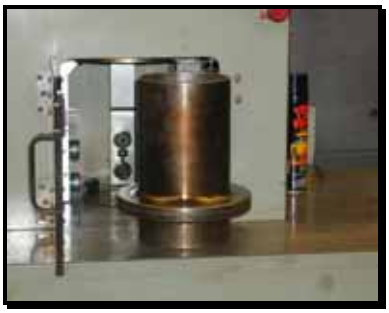

14

7. Load the mold into the compactor.
8. Ensure compactor is set to the specified number of gyrations or required specimen height.
9. Apply pressure: 600 kPa ±18 kPa
10. Apply angle: 1.16 ±0.02° average internal angle.
11. Apply the specified number of gyrations at a rate of 30 ±0.5 gyrations per minute.

15 Once the compaction is complete (after the specified number of gyrations), the compacted specimen is extruded from the mold and the paper discs removed. The compressed sample is then cooled down to room temperature, and the specimen is appropriately identified.

Note: A cooling period of 5-10 min. in front of a fan may be necessary for some HMA before extruding to insure the specimens are not damaged.

When reusing the mold it should be re-heated for a minimum of 5 minutes. Use of multiple molds will speed up the compaction process.

16 **Density Procedure**

Determine theoretical maximum specific gravity (G_{mm}) of the loose mix in accordance with the FOP for AASHTO T 209 using companion samples. Laboratory samples shall be prepared and conditioned in accordance with the FOP for AASHTO R 30. If the mix is plant produced conditioning is not required.

Determine the bulk specific gravity (G_{mb}) of the compacted specimen in accordance with the FOP for AASHTO T 166/T 275.

To calculate density, obtain the recorded specimen height to the nearest 0.1 mm after each revolution. This may be a printout or via computer data acquisition software.

Uncorrected Relative Density

The measured heights are used to calculate the density of the sample during the compaction process. These densities are referred to as the "uncorrected density" because they are estimated based on exact volume calculations. The formulas calculate volume in cm^3 to allow direct comparison with the specific gravity.

17

$$\%G_{mmux} = \frac{W_m}{V_{mx}\ G_{mm}\ G_m} \times 100$$

and

$$V_{mx} = \frac{\pi\ d^2\ h_x}{4 \times 1000}$$

The uncorrected relative density may be calculated at any point in the compaction process using the equations at the left.

where:

$\%G_{mmux}$ = uncorrected relative density
W_m = mass of the specimen in g
G_{mm} = theoretical maximum specific gravity
G_m = unit wt. of water (1g/cm^3)
x = number of gyrations
V_{mx} = specimen volume, in cm^3 at any point based on diameter and height at that point (using mm for height and diameter)
h_x = height after x gyrations (mm)
d = diameter (mm)

18

$$\%G_{mmx} = \frac{G_{mb}\ h_m}{G_{mm}\ h_x} \times 100$$

Corrected Relative Density

The corrected relative density ($\%G_{mmx}$) may be determined for any point in the compaction of the specimens by using the formula at the left

where:

$\%G_{mmx}$ = corrected relative density as percent of maximum theoretical specific gravity

G_{mb} = measured bulk specific gravity of the compacted specimen

G_{mm} = theoretical maximum specific gravity

h_m = height of extruded specimen (mm)

h_x = height after x gyrations (mm)

Calculation Example – (Corrected Relative Density)

(Corrected Relative Density at N_{ini} for the specimen in Figure 1

$$\%G_{mmx}@N_{ini} = \frac{2.409 \times 118.0}{2.461 \times 133.1} \times 100 = 86.78, \text{ say } 86.8$$ 19

Where:

N_{ini}	= 8 gyrations	N_{ini}	= 8
G_{mb}	= 2.409	N_{des}	= 100
G_{mm}	= 2.461	N_{max}	= 160
$\%G_{mmx}$	= corrected relative density		
h_x	= 133.1 mm (height after x gyrations)		
h_m	= 118.0 (height of extruded specimen)		

Figure 1 – Example Gyratory Printout 20

Specimen Size: 150 mm **Date: 11/01/04**

Pressure: 600 kPa **Time: 14:35:27**

Specimen ID: 1 **Test #1** **Technician**:

Specimen Height (mm) vs. No. of Gyrations

	0	**1**	**2**	**3**	**4**	**5**	**6**	**7**	**8**	**9**
0	150.9	146.0	142.4	139.9	137.9	136.4	135.1	134.0	133.1	132.4
10	131.7	131.0	130.4	129.9	129.3	128.9	128.5	128.1	127.7	127.4
20	127.0	126.6	126.4	126.1	125.8	125.5	125.3	125.1	124.9	124.7
30	124.4	124.3	124.0	123.9	123.7	123.5	123.4	123.2	123.0	122.9
40	122.7	122.6	122.4	122.3	122.1	122.1	122.0	121.8	121.7	121.6
50	121.5	121.3	121.3	121.2	121.0	121.0	120.9	120.8	120.7	120.6
60	120.5	120.4	120.4	120.3	120.2	120.1	120.0	119.9	119.9	119.8
70	119.7	119.6	119.6	119.6	119.5	119.4	119.3	119.3	119.2	119.1
80	119.1	119.0	119.0	118.9	118.9	118.8	118.7	118.7	118.6	118.5
90	118.5	118.4	118.4	118.4	118.3	118.2	118.2	118.1	118.1	118.1
100	118.0	0.0	0.0	0.0	0.0	0.0	0.0	0.0	0.0	0.0
110	0.0	0.0	0.0	0.0	0.0	0.0	0.0	0.0	0.0	0.0
120	0.0	0.0	0.0	0.0	0.0	0.0	0.0	0.0	0.0	0.0
130	0.0	0.0	0.0	0.0	0.0	0.0	0.0	0.0	0.0	0.0
140	0.0	0.0	0.0	0.0	0.0	0.0	0.0	0.0	0.0	0.0
150	0.0	0.0	0.0	0.0	0.0	0.0	0.0	0.0	0.0	0.0
160	0.0	0.0	0.0	0.0	0.0	0.0	0.0	0.0	0.0	0.0
170	0.0	0.0	0.0	0.0	0.0	0.0	0.0	0.0	0.0	0.0
180	0.0	0.0	0.0	0.0	0.0	0.0	0.0	0.0	0.0	0.0
190	0.0	0.0	0.0	0.0	0.0	0.0	0.0	0.0	0.0	0.0
200	0.0	0.0	0.0	0.0	0.0	0.0	0.0	0.0	0.0	0.0

21

Report

Report on standard agency forms. If applicable to the agency requirements, include the following information:

1. Project name
2. Test date
3. Sample or lot and sublot number
4. Test location represented
5. Specimen I.D.
6. Job mix formula I.D.
7. Percent binder to nearest 0.1%
8. Specimen mass to nearest 0.1g
9. G_{mm} to nearest 0.001
10. G_{mb} to nearest 0.001
11. Mold diameter to nearest 1.0mm
12. Height at each gyration to nearest 0.1mm
13. Relative density expressed as percent of G_{mm} to nearest 0.1%
14. Gyration angle to the nearest 0.01° and the method used to verify the angle

22

23

Tips!

- Don't forget to install base plate and paper disc in bottom of mold prior to filling.
- Don't forget to level the material in the mold.
- Cooling of extruded hot specimens is required in many cases to prevent damage due to handling.
- Don't forget to remove the paper discs as soon as possible from the hot specimens.

REVIEW QUESTIONS

1. What is the purpose of the Gyratory Compactor?

2. How many kPa of pressure is applied to the specimen?

3. At what angle is the specimen compacted?

4. Using the example information calculate the corrected relative density (%G_{mmx}) at N_{des}.