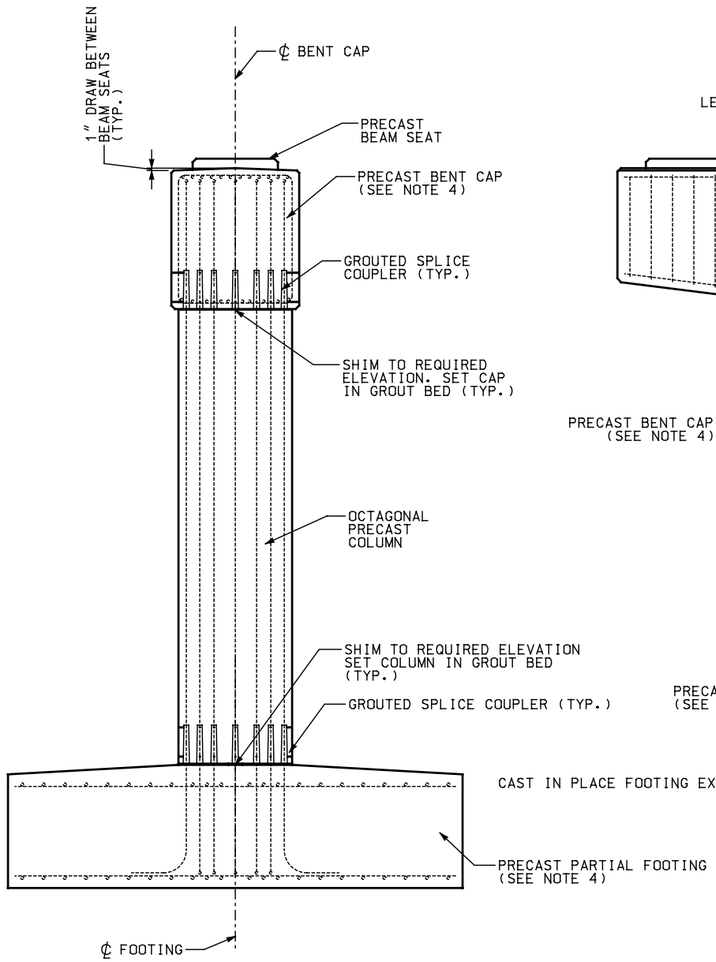

PRECAST SINGLE COLUMN BENT
SIDE VIEW

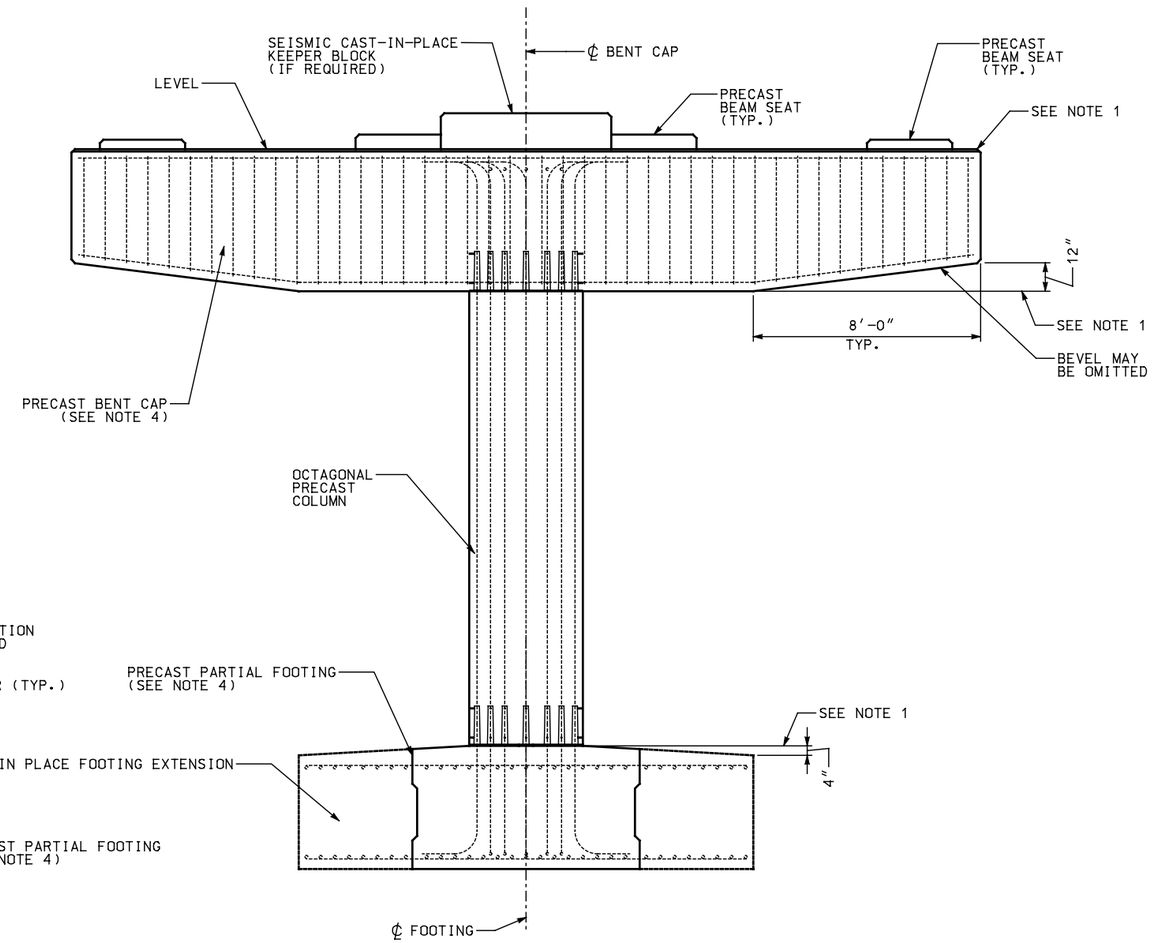

PRECAST SINGLE COLUMN BENT
ELEVATION

NOTES:

1. ERECTION TOLERANCE ON ELEVATION ±1/4".
2. COLUMN SHEAR REINFORCEMENT NOT SHOWN FOR CLARITY.
3. COLUMN AND BENT CAP TO BE BRACED UNTIL GROUT HAS ACHIEVED ADEQUATE STRENGTH.
4. DESIGNER TO PROVIDE SHIPPING WEIGHT FOR ALL PRECAST ELEMENTS.

REVISIONS

NO.	DATE	APPR.	REMARKS

DRAFT – NOT RELEASED FOR CONSTRUCTION

UTAH DEPARTMENT OF TRANSPORTATION
STANDARD DRAWINGS FOR ROAD AND BRIDGE CONSTRUCTION
SALT LAKE CITY, UTAH

RECOMMENDED FOR APPROVAL _____ DATE

CHAIRMAN STANDARDS COMMITTEE APPROVED _____ DATE

DEPUTY DIRECTOR

PRECAST BENTS
SINGLE COLUMN BENT

STD. DWG. NO.
P – 1

$$date$$
$$file$$

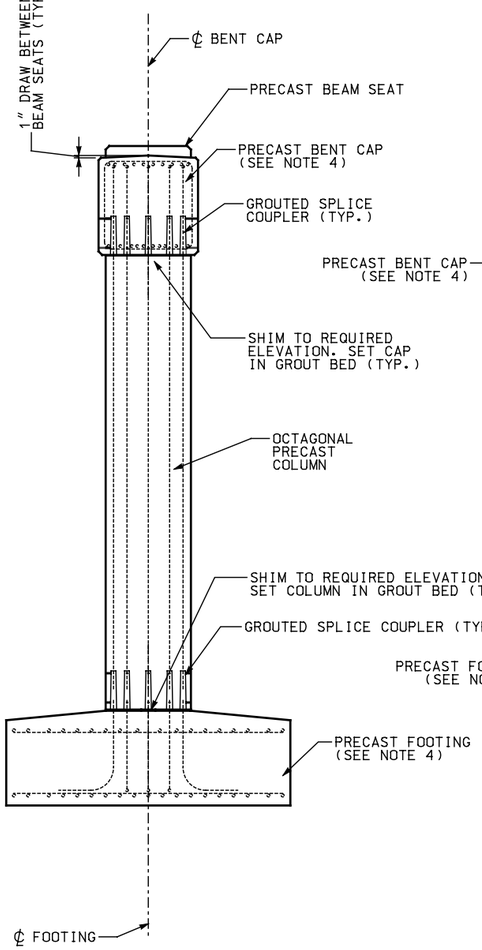

PRECAST DOUBLE COLUMN BENT
SIDE VIEW

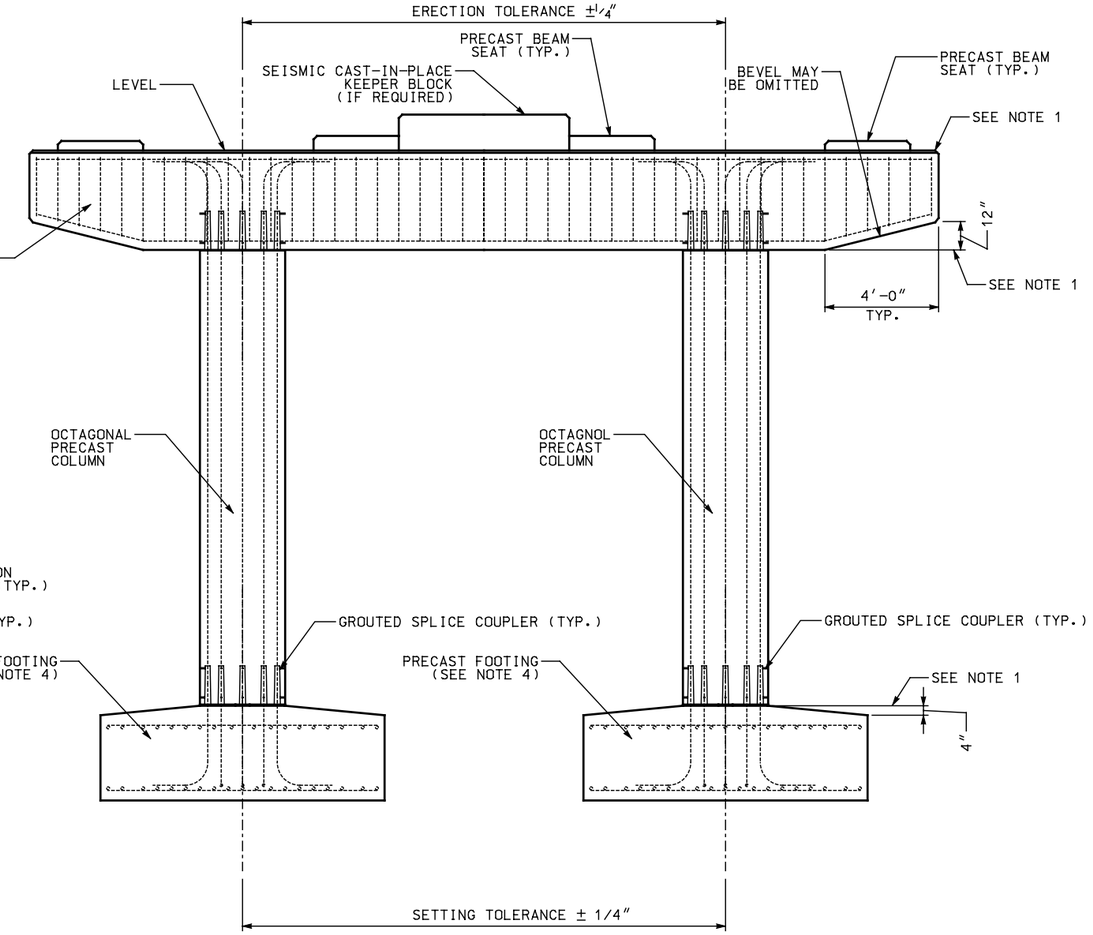

PRECAST DOUBLE COLUMN BENT
ELEVATION

NOTES:

1. ERECTION TOLERANCE ON ELEVATION ±1/4".
2. COLUMN SHEAR REINFORCEMENT NOT SHOWN FOR CLARITY.
3. COLUMN AND BENT CAP TO BE BRACED UNTIL GROUT HAS ACHIEVED ADEQUATE STRENGTH.
4. DESIGNER TO PROVIDE SHIPPING WEIGHT FOR ALL PRECAST ELEMENTS.

REVISIONS

NO.	DATE	APPR.	REMARKS

DRAFT – NOT RELEASED FOR CONSTRUCTION

UTAH DEPARTMENT OF TRANSPORTATION
STANDARD DRAWINGS FOR ROAD AND BRIDGE CONSTRUCTION
SALT LAKE CITY, UTAH

RECOMMENDED FOR APPROVAL — DATE

CHAIRMAN STANDARDS COMMITTEE APPROVED — DATE

DEPUTY DIRECTOR

PRECAST BENTS
DOUBLE COLUMN BENT

STD. DWG. NO.
P – 2

$$date$$ $$file$$

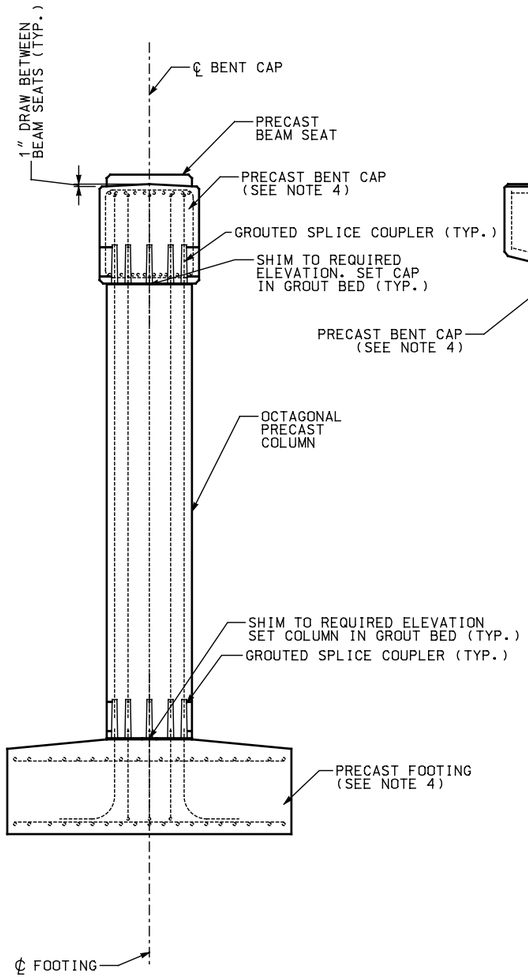

PRECAST TRIPLE COLUMN BENT
SIDE VIEW

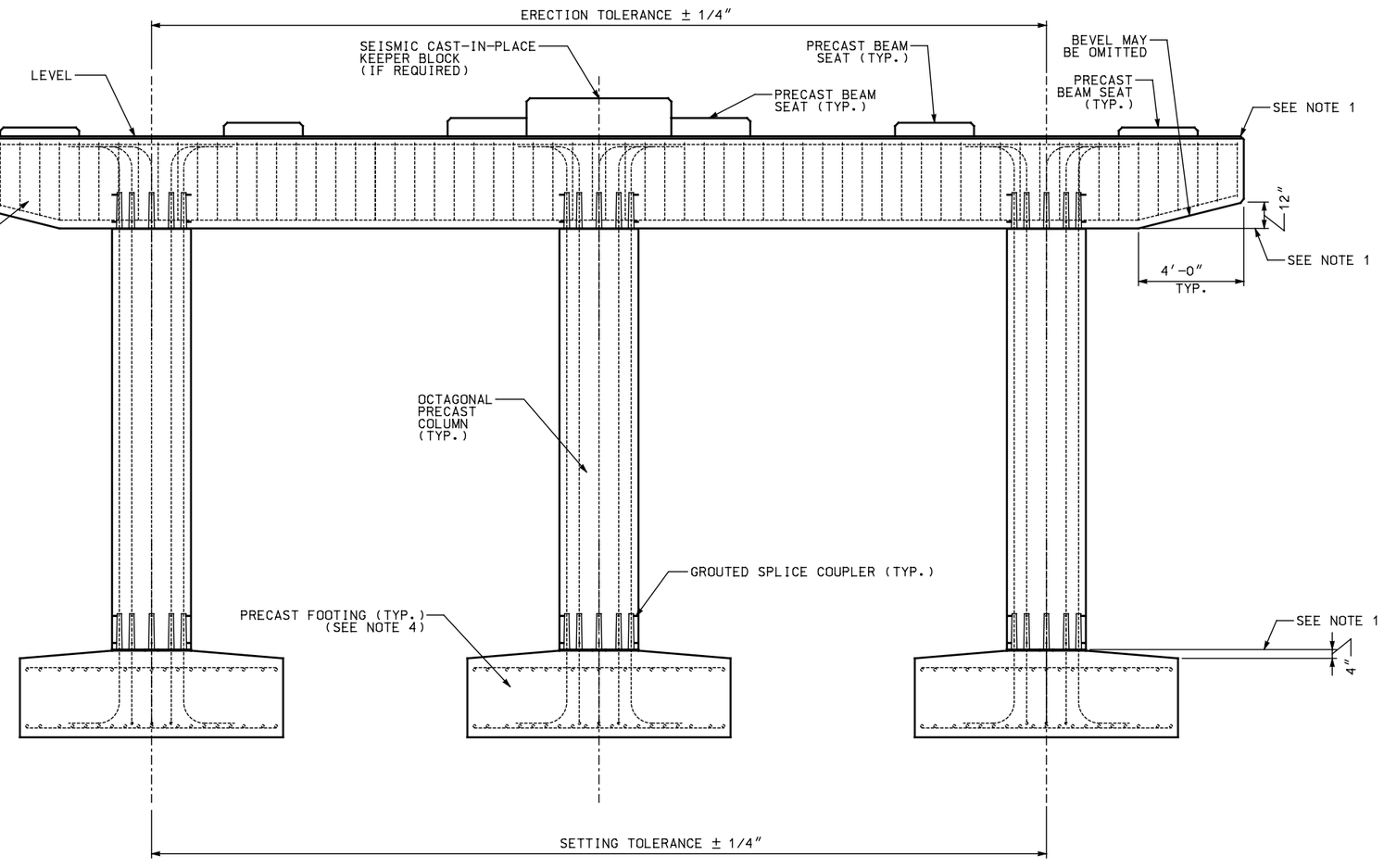

PRECAST TRIPLE COLUMN BENT
ELEVATION

NOTES:

1. ERECTION TOLERANCE ON ELEVATION ±1/4".
2. COLUMN SHEAR REINFORCEMENT NOT SHOWN FOR CLARITY.
3. COLUMN AND BENT CAP TO BE BRACED UNTIL GROUT HAS ACHIEVED ADEQUATE STRENGTH.
4. DESIGNER TO PROVIDE SHIPPING WEIGHT FOR ALL PRECAST ELEMENTS.

REVISIONS

NO.	DATE	APPR.	REMARKS

DRAFT – NOT RELEASED FOR CONSTRUCTION

UTAH DEPARTMENT OF TRANSPORTATION
STANDARD DRAWINGS FOR ROAD AND BRIDGE CONSTRUCTION
SALT LAKE CITY, UTAH

RECOMMENDED FOR APPROVAL _____ DATE
CHAIRMAN STANDARDS COMMITTEE APPROVED _____ DATE
DEPUTY DIRECTOR

PRECAST BENTS
TRIPLE COLUMN BENT

STD. DWG. NO.
P – 3

$$file$$
$$date$$

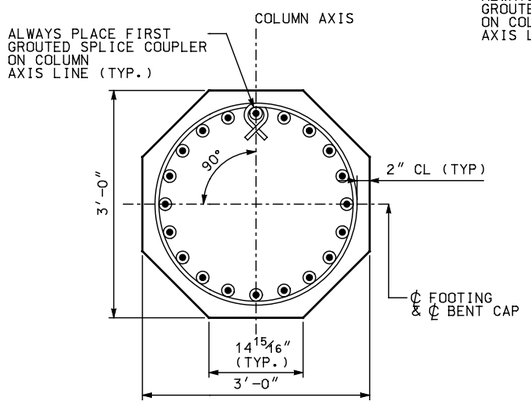

3′-0″ COLUMN SECTION

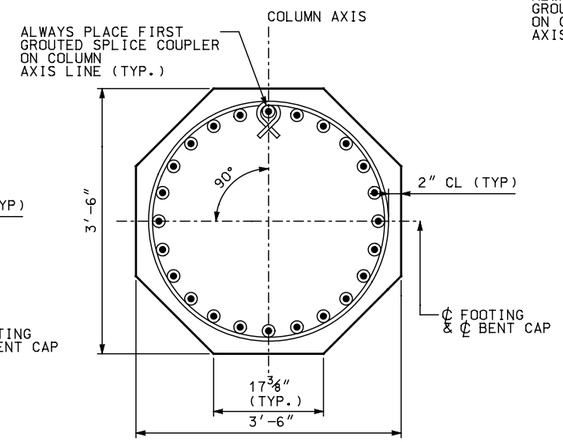

3′-6″ COLUMN SECTION

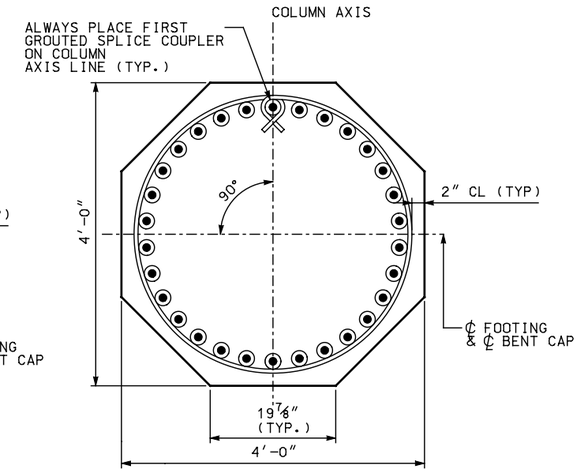

4′-0″ COLUMN SECTION

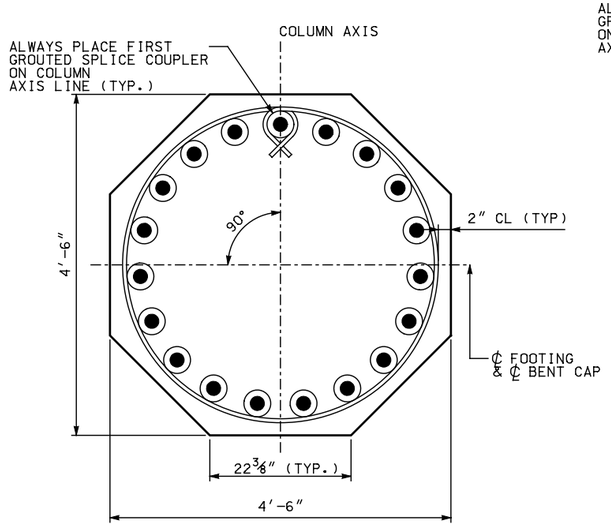

4′-6″ COLUMN SECTION

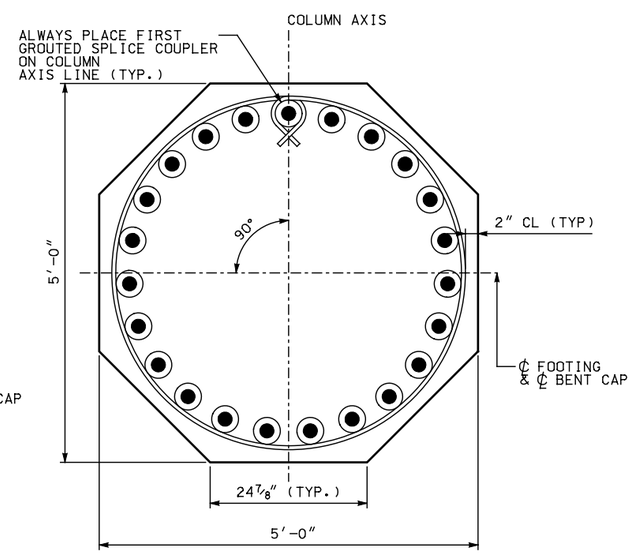

5′-0″ COLUMN SECTION

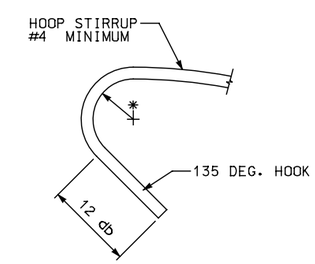

SEISMIC HOOK DETAILS

* 3 db RADIUS (MIN.)
INCREASE RADIUS TO CLEAR
GROUTED SPLICE COUPLERS

REVISIONS

NO.	DATE	APPR.	REMARKS

DRAFT – NOT RELEASED
FOR CONSTRUCTION

UTAH DEPARTMENT OF TRANSPORTATION
STANDARD DRAWINGS FOR ROAD AND BRIDGE CONSTRUCTION
SALT LAKE CITY, UTAH

RECOMMENDED FOR APPROVAL _____ DATE

CHAIRMAN STANDARDS COMMITTEE APPROVED _____ DATE

DEPUTY DIRECTOR _____ DATE

PRECAST BENTS
TYPICAL COLUMN SECTIONS

STD. DWG. NO.
P – 4

$$Date$$
$$File$$

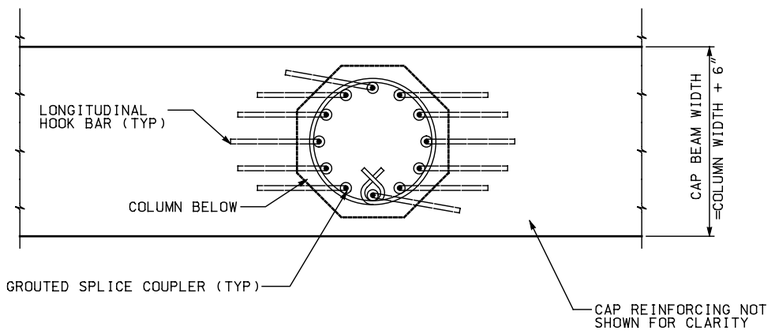

BENT CAP PLAN

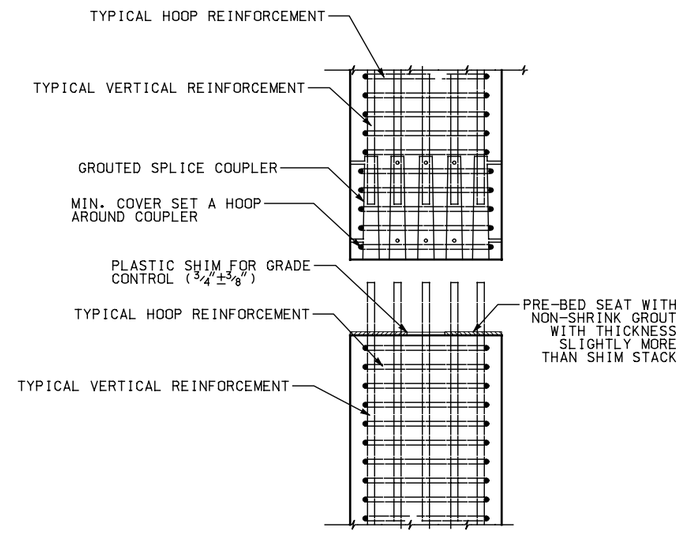

COLUMN TO COLUMN CONNECTION PRIOR TO CONNECTION

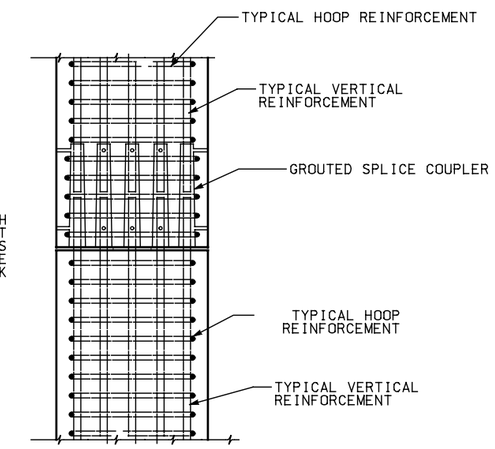

COLUMN TO COLUMN CONNECTION AFTER CONNECTION

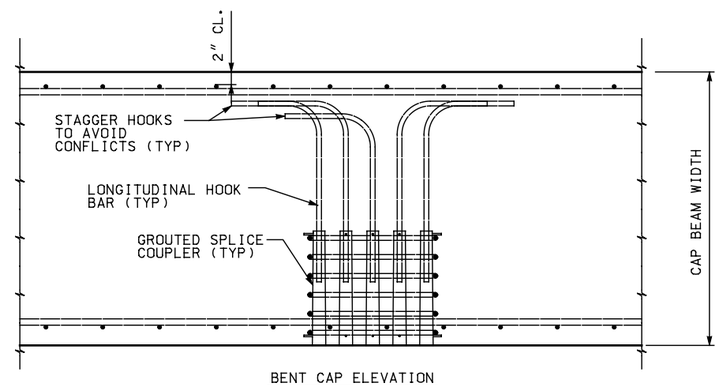

BENT CAP ELEVATION

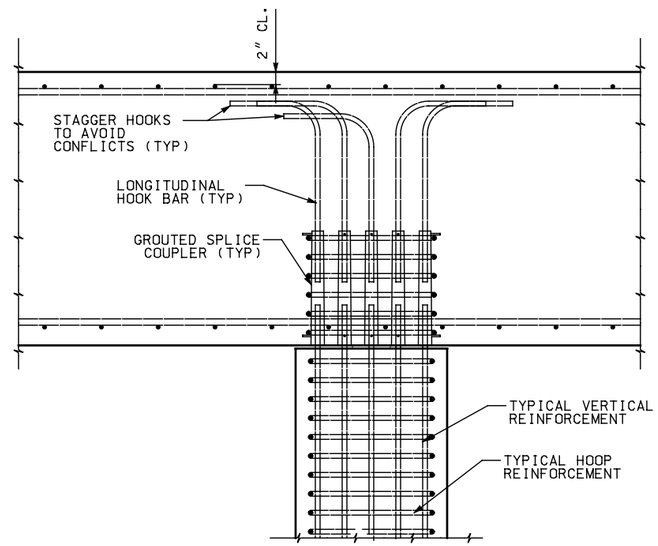

COLUMN TO CAP BEAM CONNECTION AFTER CONNECTION

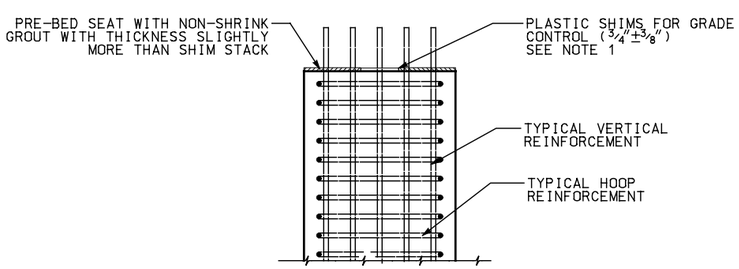

COLUMN ELEVATION

COLUMN TO CAP BEAM CONNECTION PRIOR TO CONNECTION

NOTES:

1. ADJUST SHIM STACK HEIGHT TO CONTROL ERECTION ELEVATIONS.
2. SHEAR REINFORCING IN BENT CAP NOT SHOWN FOR CLARITY.
3. COLUMN TO COLUMN SPILCE SHOWN. COLUMN TO FOOTING DETAILS SIMILAR.

REVISIONS

NO.	DATE	APPR.	REMARKS

DRAFT – NOT RELEASED FOR CONSTRUCTION

UTAH DEPARTMENT OF TRANSPORTATION
STANDARD DRAWINGS FOR ROAD AND BRIDGE CONSTRUCTION
SALT LAKE CITY, UTAH

RECOMMENDED FOR APPROVAL — DATE
CHAIRMAN STANDARDS COMMITTEE APPROVED — DATE
DEPUTY DIRECTOR

PRECAST BENT
TYPICAL CONNECTION DETAILS

STD. DWG. NO.
P – 5

$$date$$
$$file$$

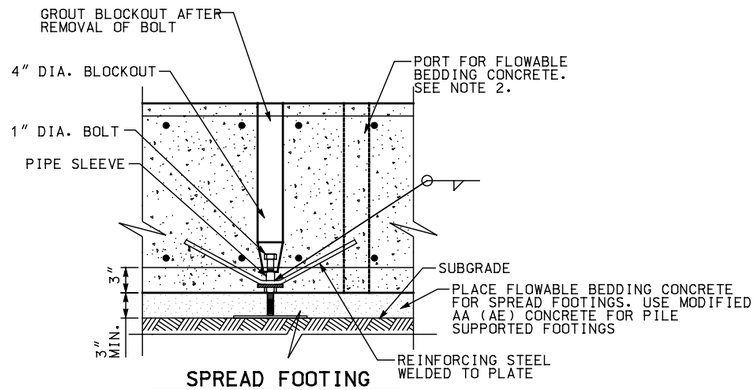

SPREAD FOOTING INSTALLATION DETAIL

NOTES:

1. REMOVE BOLT AFTER THE FLOWABLE BEDDING CONCRETE HAS SET
2. ALTERNATE DEVICES MAY BE SUBSTITUTED BY THE CONTRACTOR WITH THE APPROVAL FROM THE ENGINEER

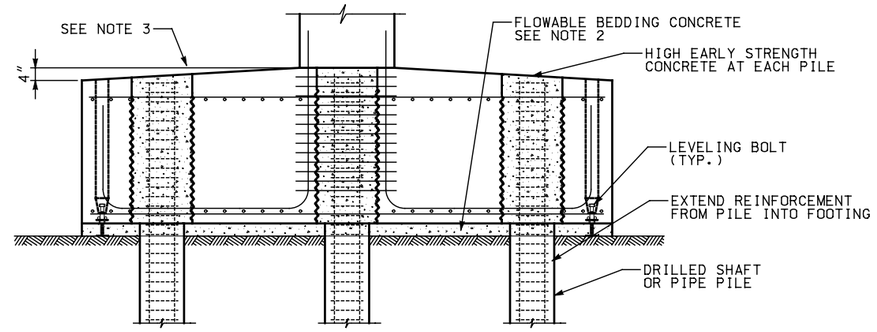

PRECAST FOOTING ON DRILLED SHAFTS OR PIPE PILES

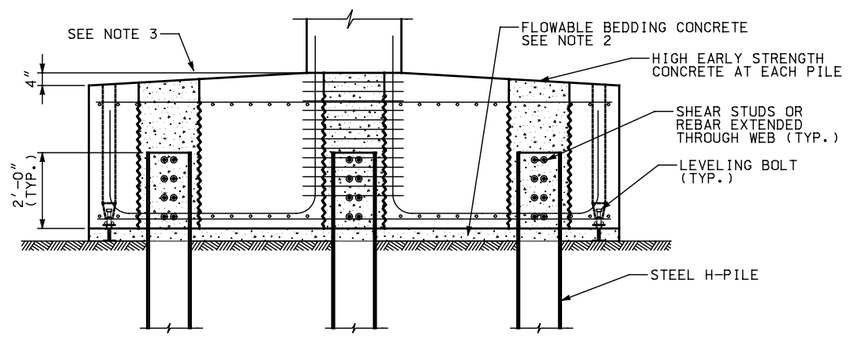

PRECAST FOOTING ON STEEL H-PILE

NOTE: WELDABLE REINFORCING STEEL BARS CAN BE FIELD WELDED TO THE PILE WEB AFTER PILE CUT-OFF

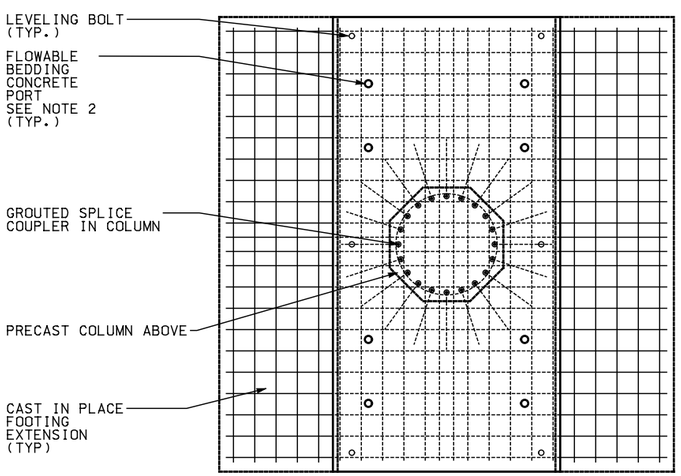

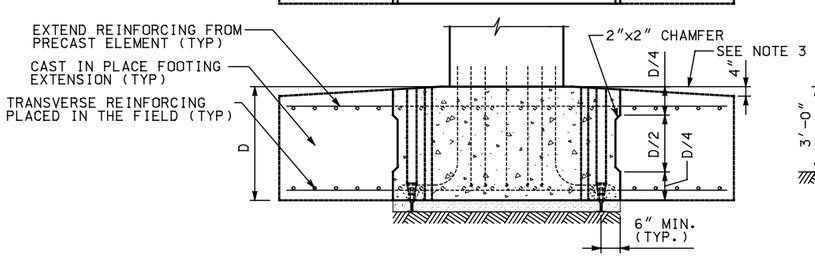

PARTIAL PRECAST SPREAD FOOTING

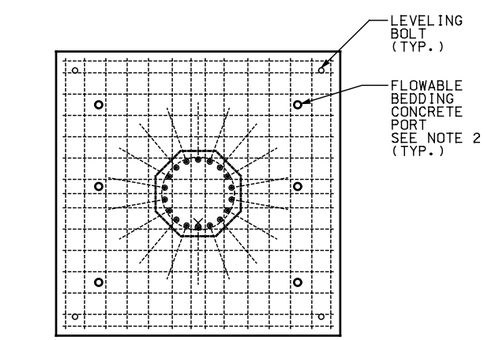

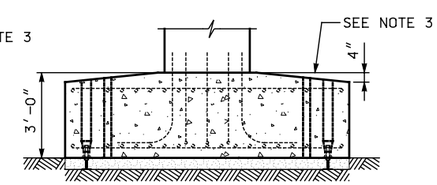

PRECAST SPREAD FOOTING

NOTE: DESIGNER TO LIST SHIPPING WEIGHT ON PLAN SET

PRECAST FOOTING NOTES:

1. DIMENSIONS SHOWN ARE NOT TYPICAL. DETAILS WILL VARY WITH EACH SUBSTRUCTURE UNIT.
2. CONTRACTOR TO DETERMINE SIZE AND SPACING OF PORTS. BASED ON MIX DESIGN.
3. ERECTION TOLERANCE ON ELEVATION ±¼″.

REVISIONS

NO.	DATE	APPR.	REMARKS

DRAFT – NOT RELEASED FOR CONSTRUCTION

UTAH DEPARTMENT OF TRANSPORTATION
STANDARD DRAWINGS FOR ROAD AND BRIDGE CONSTRUCTION
SALT LAKE CITY, UTAH

RECOMMENDED FOR APPROVAL — DATE
CHAIRMAN STANDARDS COMMITTEE APPROVED — DATE
DEPUTY DIRECTOR

PRECAST FOOTINGS
TYPICAL DETAILS

STD. DWG. NO.
F – 1

$$file$$
$$date$$

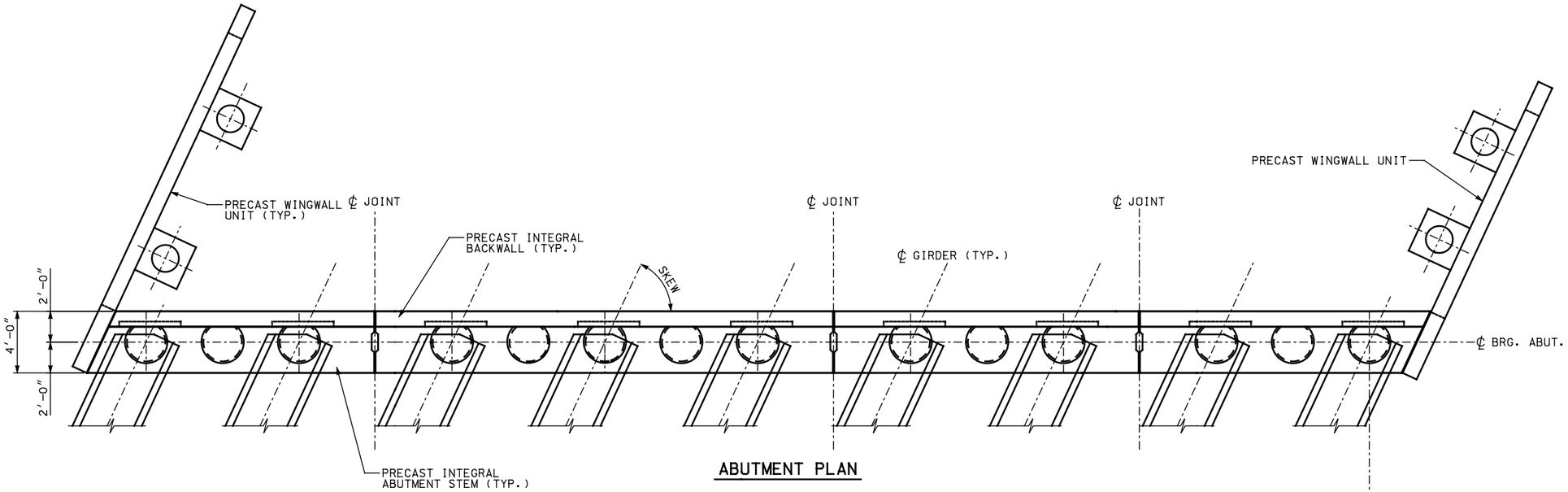

ABUTMENT PLAN

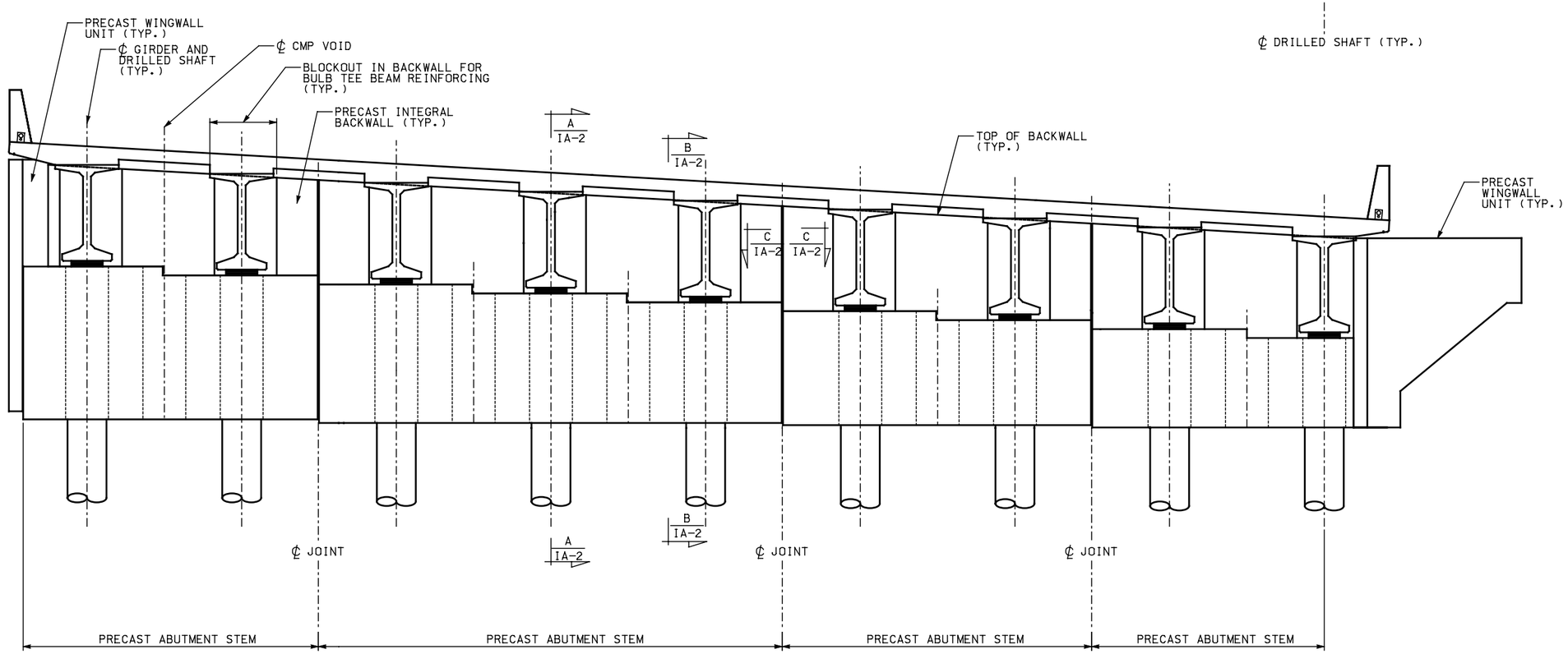

ABUTMENT ELEVATION

NOTE: ABUTMENT DIAPHRAGMS NOT SHOWN FOR CLARITY

DRAFT – NOT RELEASED FOR CONSTRUCTION

NO.	DATE	APPR.	REMARKS

REVISIONS

UTAH DEPARTMENT OF TRANSPORTATION
STANDARD DRAWINGS FOR ROAD AND BRIDGE CONSTRUCTION
SALT LAKE CITY, UTAH

RECOMMENDED FOR APPROVAL — DATE
CHAIRMAN STANDARDS COMMITTEE APPROVED — DATE
DEPUTY DIRECTOR

PRECAST INTEGRAL ABUTMENT
PLAN AND ELEVATION

STD. DWG. NO.
IA – 1

$$file$$
$$date$$

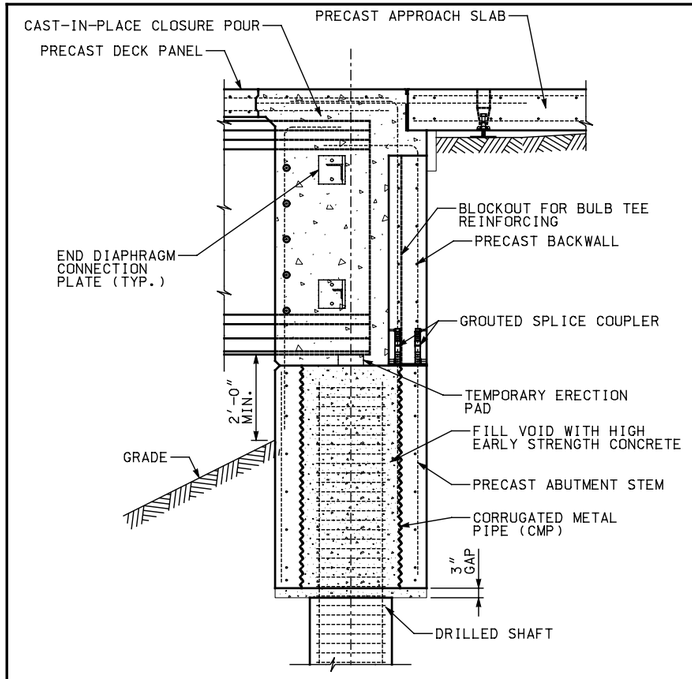

ABUTMENT SECTION A / IA-1

NOTE: ALL ABUTMENT REINFORCEMENT NOT SHOWN FOR CLARITY

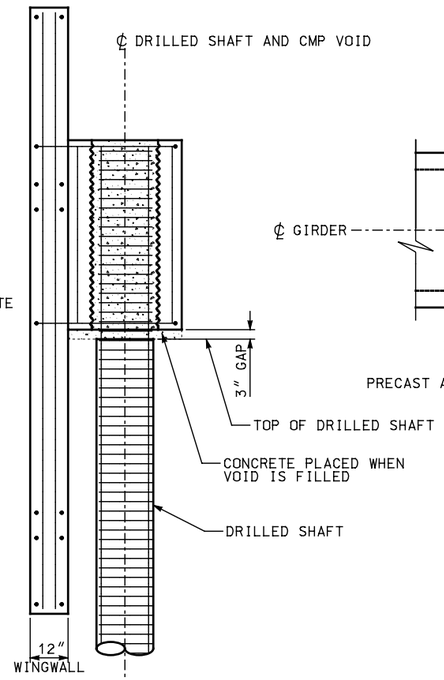

WINGWALL SECTION D / –

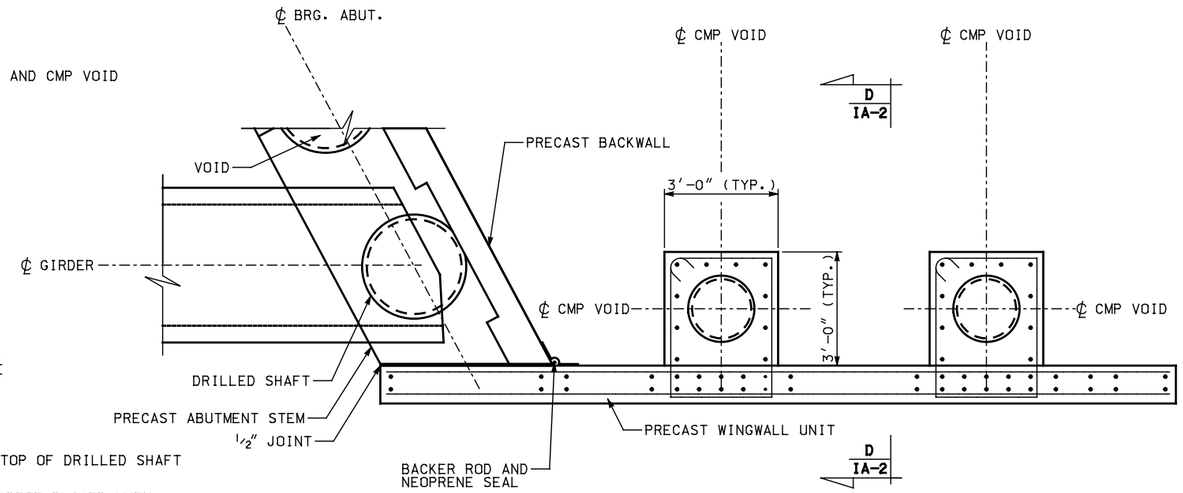

DRILLED SHAFT WINGWALL PLAN

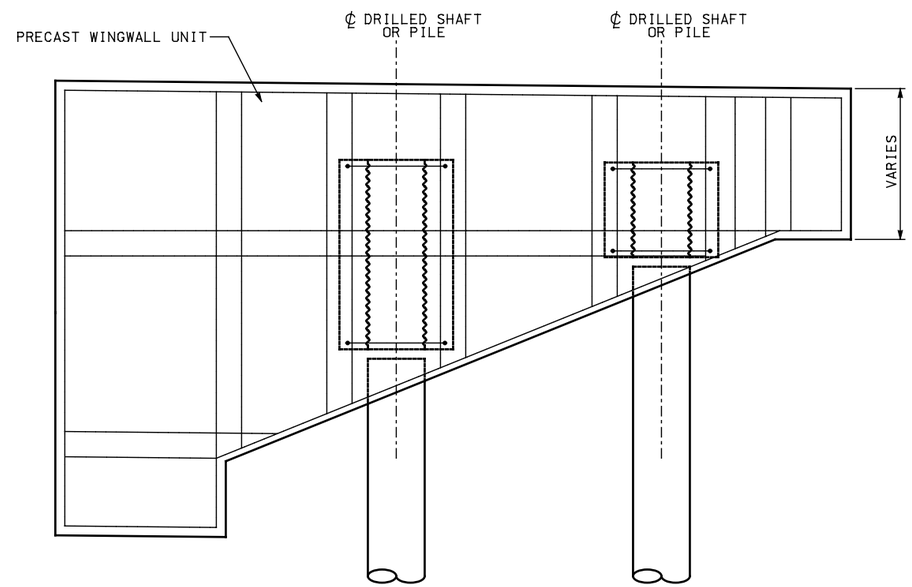

DRILLED SHAFT WINGWALL ELEVATION

NOTES:

1. ALL REINFORCING NOT SHOWN FOR CLARITY.
2. PROVIDE TEMPORARY BRACING/SHORING UNTIL CONNECTION HAS ACHIEVED ADEQUATE STRENGTH.

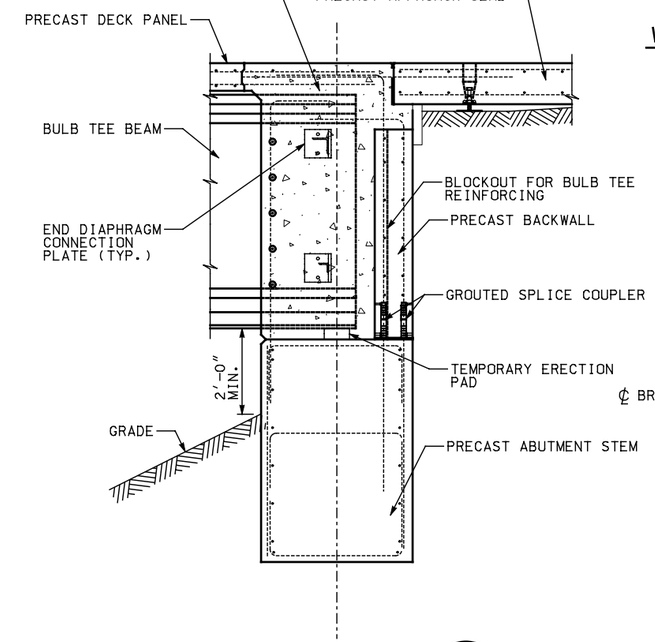

ABUTMENT SECTION B / IA-1

NOTE: ALL ABUTMENT REINFORCEMENT NOT SHOWN FOR CLARITY

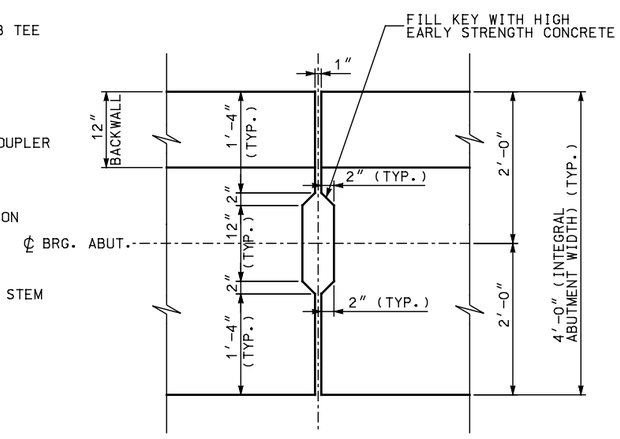

ABUTMENT STEM SHEAR KEY C / IA-1

NOTES:
1. ABUTMENT REINFORCEMENT NOT SHOWN FOR CLARITY
2. CONTRACTOR TO DESIGN FORM TO RETAIN KEY CONCRETE

REVISIONS

NO.	DATE	APPR.	REMARKS

DRAFT – NOT RELEASED FOR CONSTRUCTION

UTAH DEPARTMENT OF TRANSPORTATION
STANDARD DRAWINGS FOR ROAD AND BRIDGE CONSTRUCTION
SALT LAKE CITY, UTAH

RECOMMENDED FOR APPROVAL — DATE
CHAIRMAN STANDARDS COMMITTEE APPROVED — DATE
DEPUTY DIRECTOR

PRECAST INTEGRAL ABUTMENT SECTION & INTEGRAL WINGWALL

STD. DWG. NO.
IA – 2

$$date$$
$$file$$

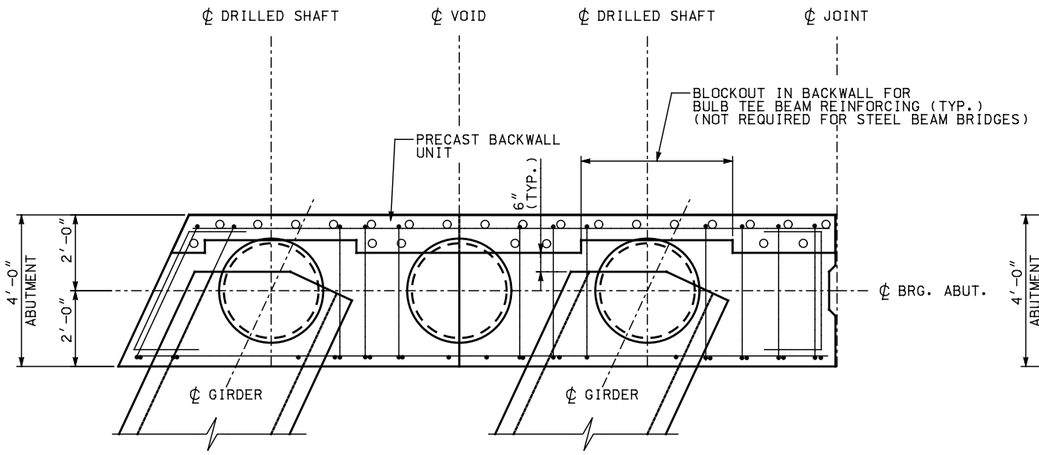

END ABUTMENT BLOCK PLAN

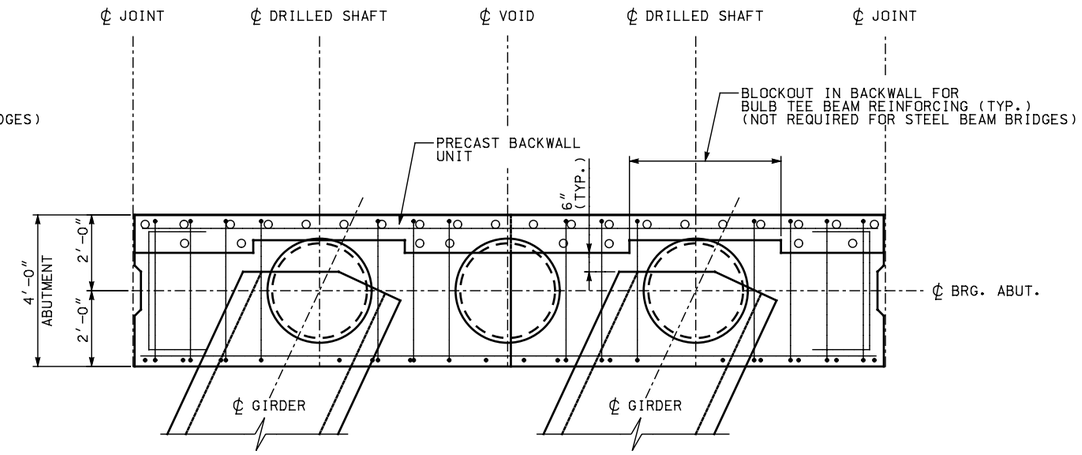

MID-ABUTMENT BLOCK PLAN

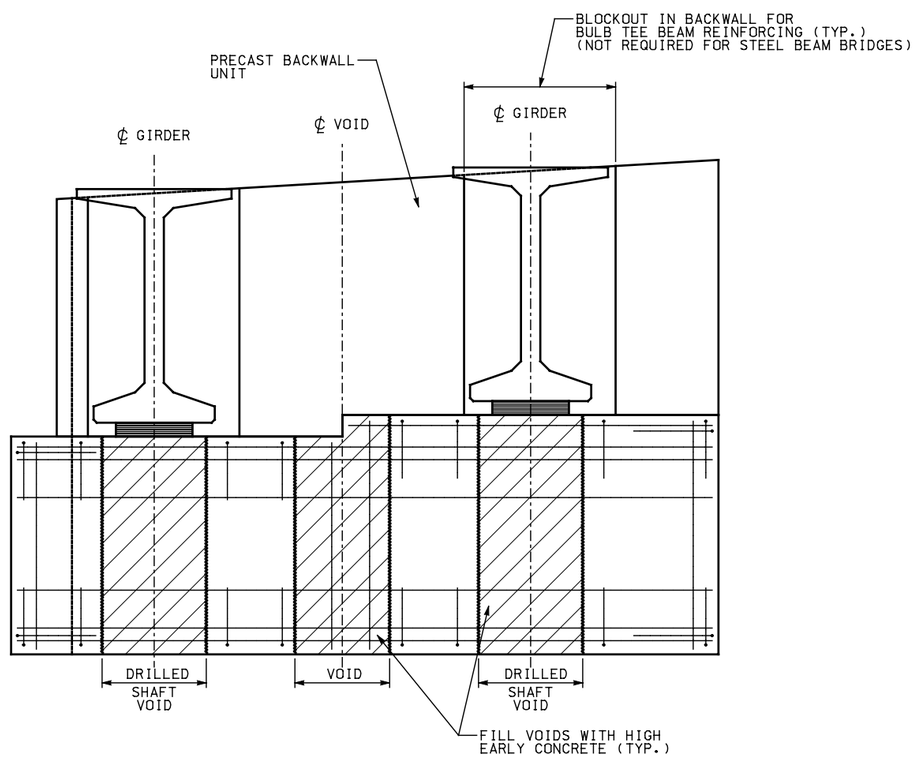

END ABUTMENT BLOCK ELEVATION

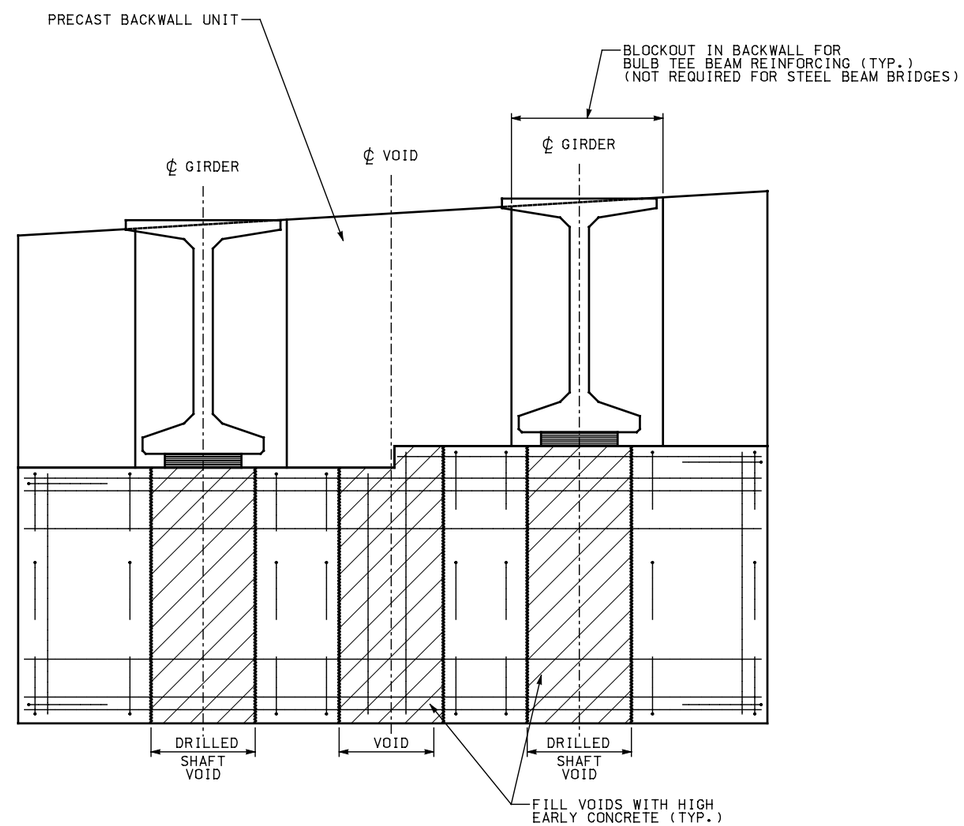

MID-ABUTMENT BLOCK ELEVATION

REVISIONS

NO.	DATE	APPR.	REMARKS

DRAFT – NOT RELEASED FOR CONSTRUCTION

UTAH DEPARTMENT OF TRANSPORTATION
STANDARD DRAWINGS FOR ROAD AND BRIDGE CONSTRUCTION
SALT LAKE CITY, UTAH

RECOMMENDED FOR APPROVAL — DATE

CHAIRMAN STANDARDS COMMITTEE APPROVED — DATE

DEPUTY DIRECTOR

PRECAST INTEGRAL ABUTMENT
ABUTMENT PLAN & ELEVATION DETAILS

STD. DWG. NO.
IA – 3

$$file$$
$$date$$

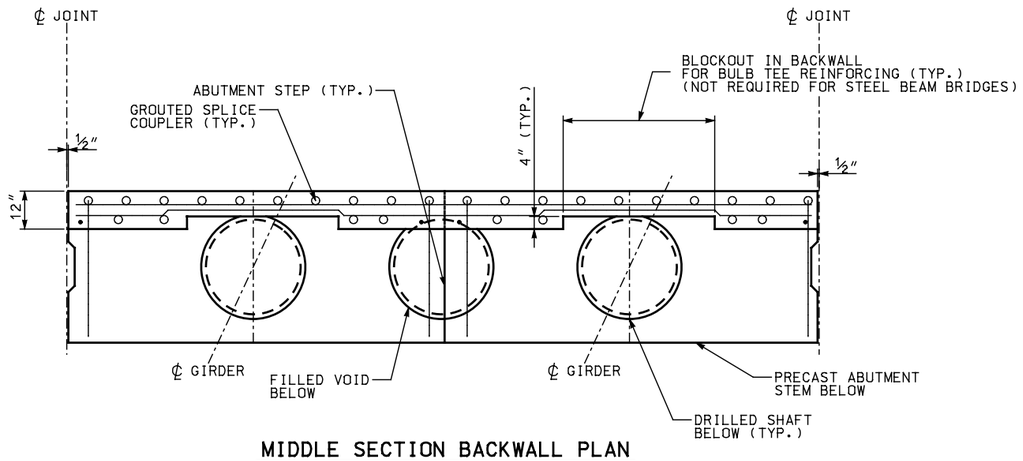

MIDDLE SECTION BACKWALL PLAN

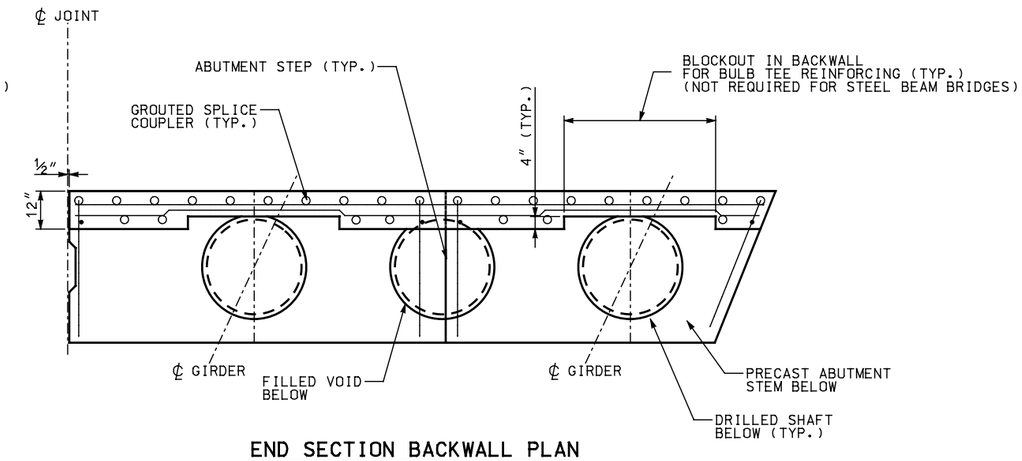

END SECTION BACKWALL PLAN

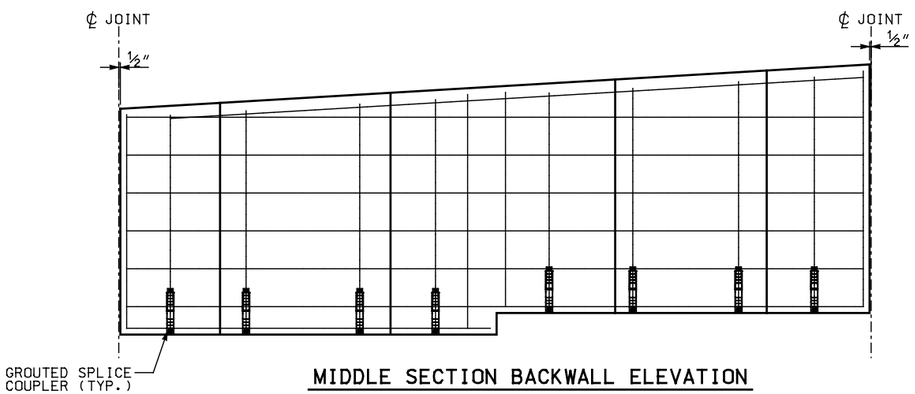

MIDDLE SECTION BACKWALL ELEVATION

NOTE: NOT ALL REINFORCING AND GROUTED SPLICE COUPLERS SHOWN

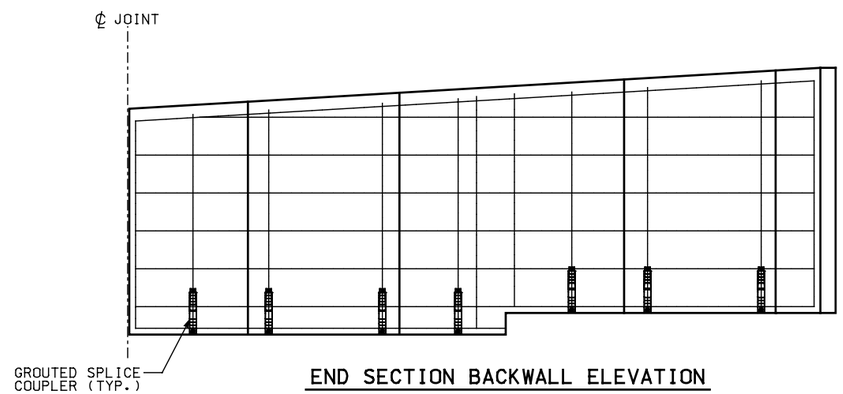

END SECTION BACKWALL ELEVATION

NOTE: NOT ALL REINFORCING AND GROUTED SPLICE COUPLERS SHOWN

REVISIONS

NO.	DATE	APPR.	REMARKS

DRAFT – NOT RELEASED FOR CONSTRUCTION

UTAH DEPARTMENT OF TRANSPORTATION
STANDARD DRAWINGS FOR ROAD AND BRIDGE CONSTRUCTION
SALT LAKE CITY, UTAH

RECOMMENDED FOR APPROVAL _____ DATE

CHAIRMAN STANDARDS COMMITTEE APPROVED _____ DATE

DEPUTY DIRECTOR

PRECAST INTEGRAL ABUTMENT
BACKWALL DETAILS

STD. DWG. NO.
IA – 4

$$date$$
$$file$$

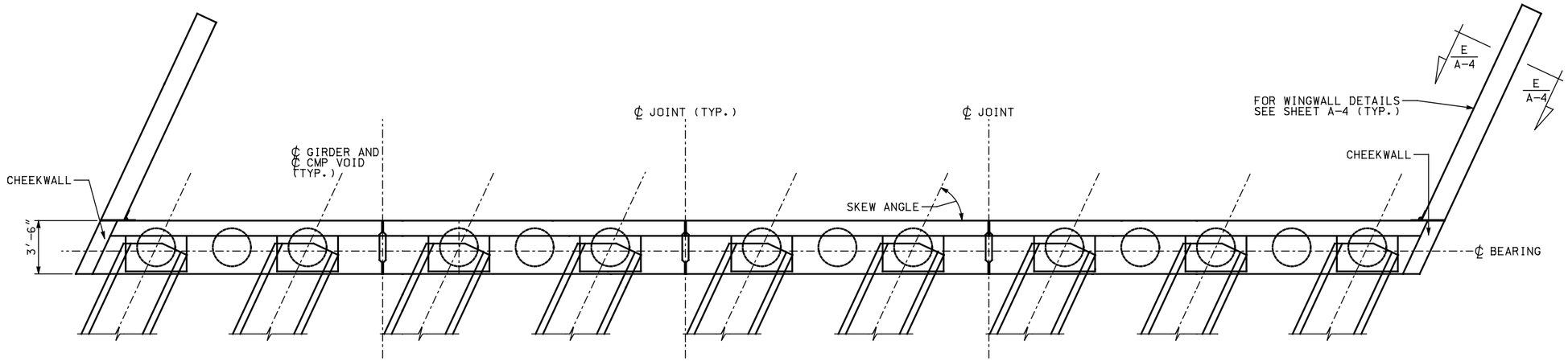

CANTILEVER ABUTMENT ELEVATION

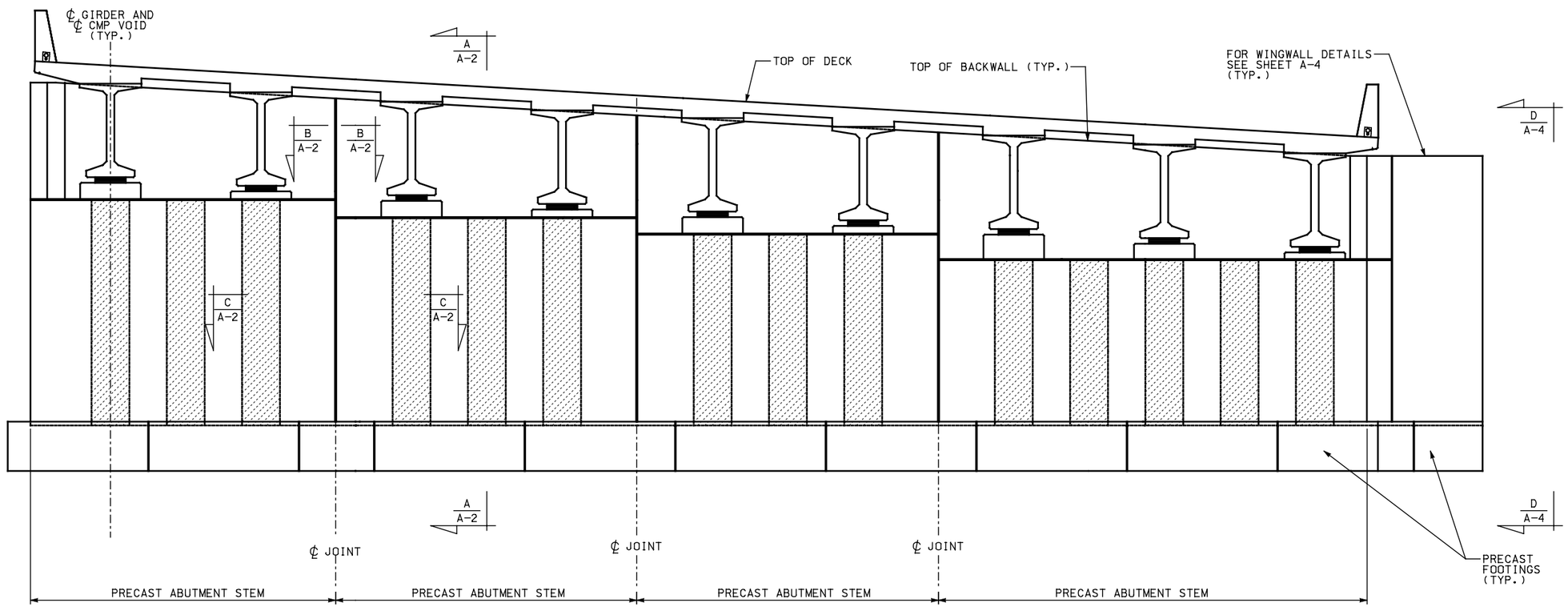

CANTILEVER ABUTMENT ELEVATION

NOTES:
1. END DIAPHRAGMS NOT SHOWN FOR CLARITY
2. HORIZONTAL JOINTS IN WALL STEMS PERMITTED WITH PRIOR APPROVAL FROM UDOT

DRAFT – NOT RELEASED FOR CONSTRUCTION

NO.	DATE	APPR.	REMARKS

REVISIONS

UTAH DEPARTMENT OF TRANSPORTATION
STANDARD DRAWINGS FOR ROAD AND BRIDGE CONSTRUCTION
SALT LAKE CITY, UTAH

RECOMMENDED FOR APPROVAL — DATE
CHAIRMAN STANDARDS COMMITTEE APPROVED — DATE
DEPUTY DIRECTOR

PRECAST CANTILEVER ABUTMENT
PLAN AND ELEVATION

STD. DWG. NO.
A – 1

$$Date$$
$$File$$

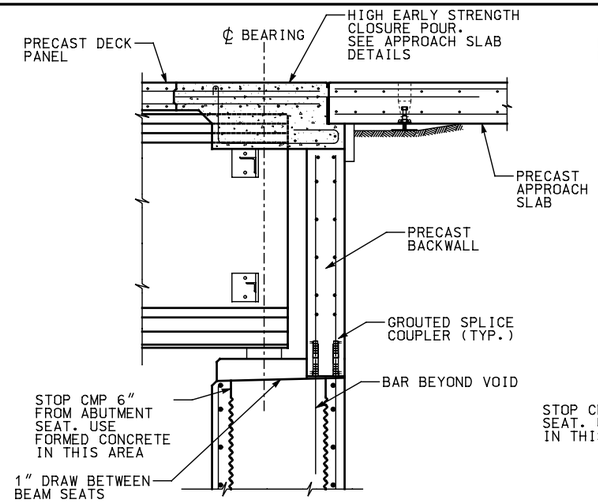

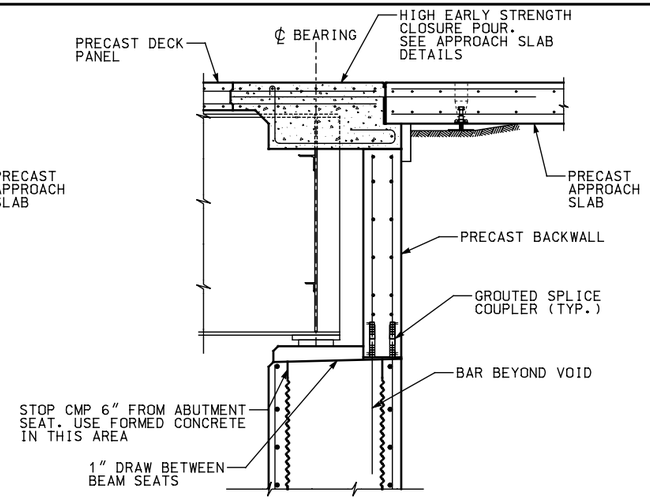

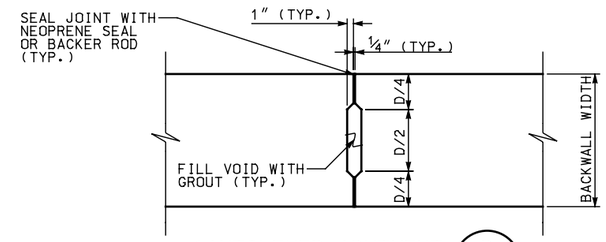

CANTILEVER ABUTMENT BACKWALL KEY (B / A-1)

NOTE: BACKWALL REINFORCEMENT NOT SHOWN FOR CLARITY

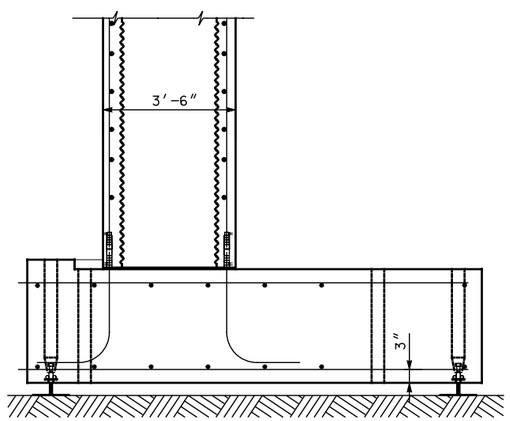

CANTILEVER ABUTMENT SECTION WITH PRESTRESSED CONCRETE GIRDER (A / A-1)

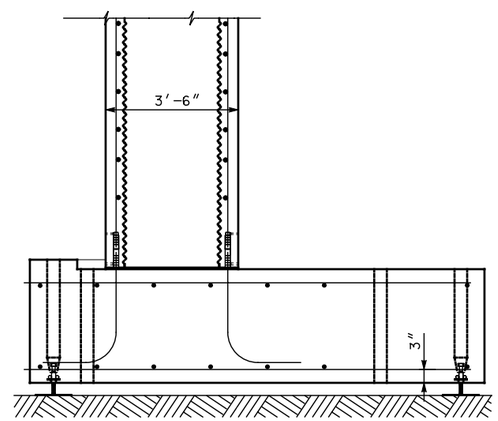

CANTILEVER ABUTMENT SECTION WITH STEEL GIRDER (A / A-1)

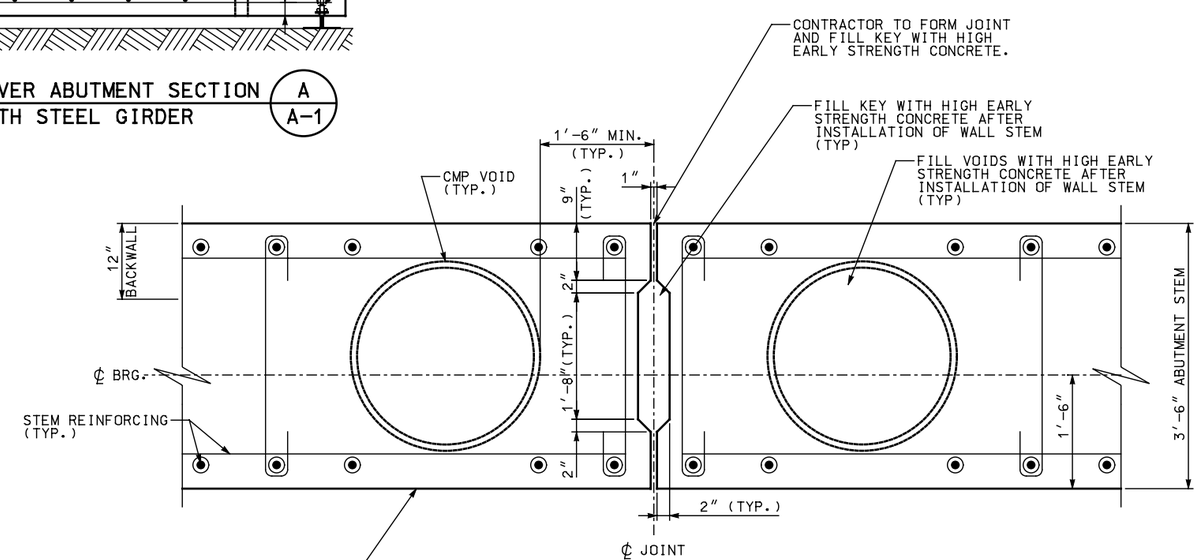

TYPICAL CANTILEVER ABUTMENT STEM SHEAR KEY (C / A-1)

NOTE: ABUTMENT REINFORCEMENT NOT SHOWN FOR CLARITY

REVISIONS

NO.	DATE	APPR.	REMARKS

DRAFT – NOT RELEASED FOR CONSTRUCTION

UTAH DEPARTMENT OF TRANSPORTATION
STANDARD DRAWINGS FOR ROAD AND BRIDGE CONSTRUCTION
SALT LAKE CITY, UTAH

RECOMMENDED FOR APPROVAL ____ DATE ____
CHAIRMAN STANDARDS COMMITTEE APPROVED ____ DATE ____
DEPUTY DIRECTOR

PRECAST CANTILEVER ABUTMENT SECTION AND DETAILS

STD. DWG. NO.
A – 2

$$Date$$ $$File$$

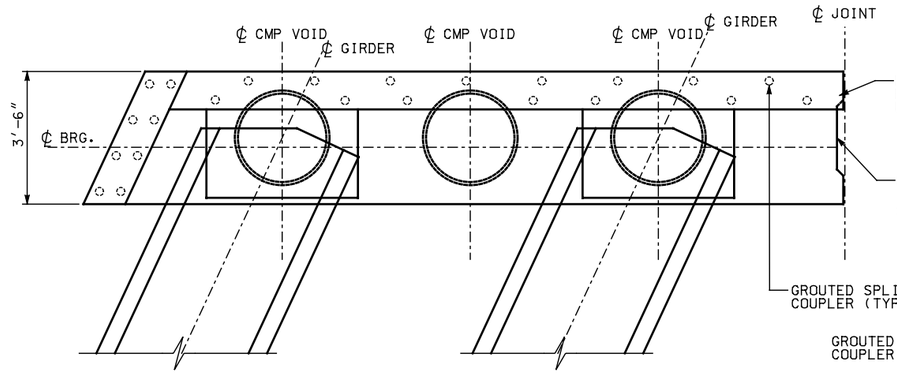

CANTILEVER END ABUTMENT BLOCK PLAN

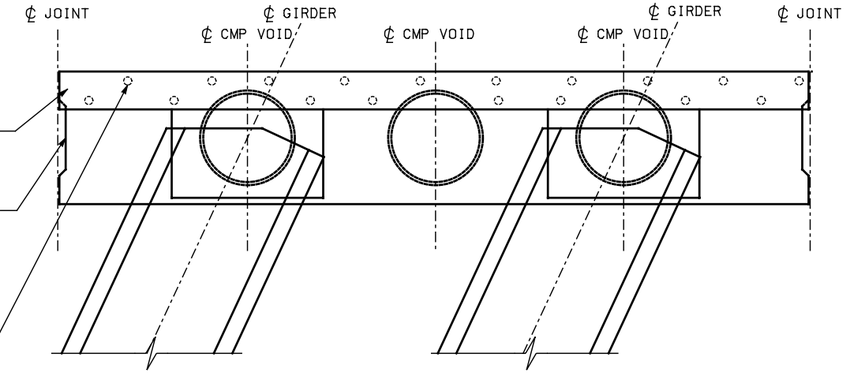

CANTILEVER MIDDLE ABUTMENT BLOCK PLAN

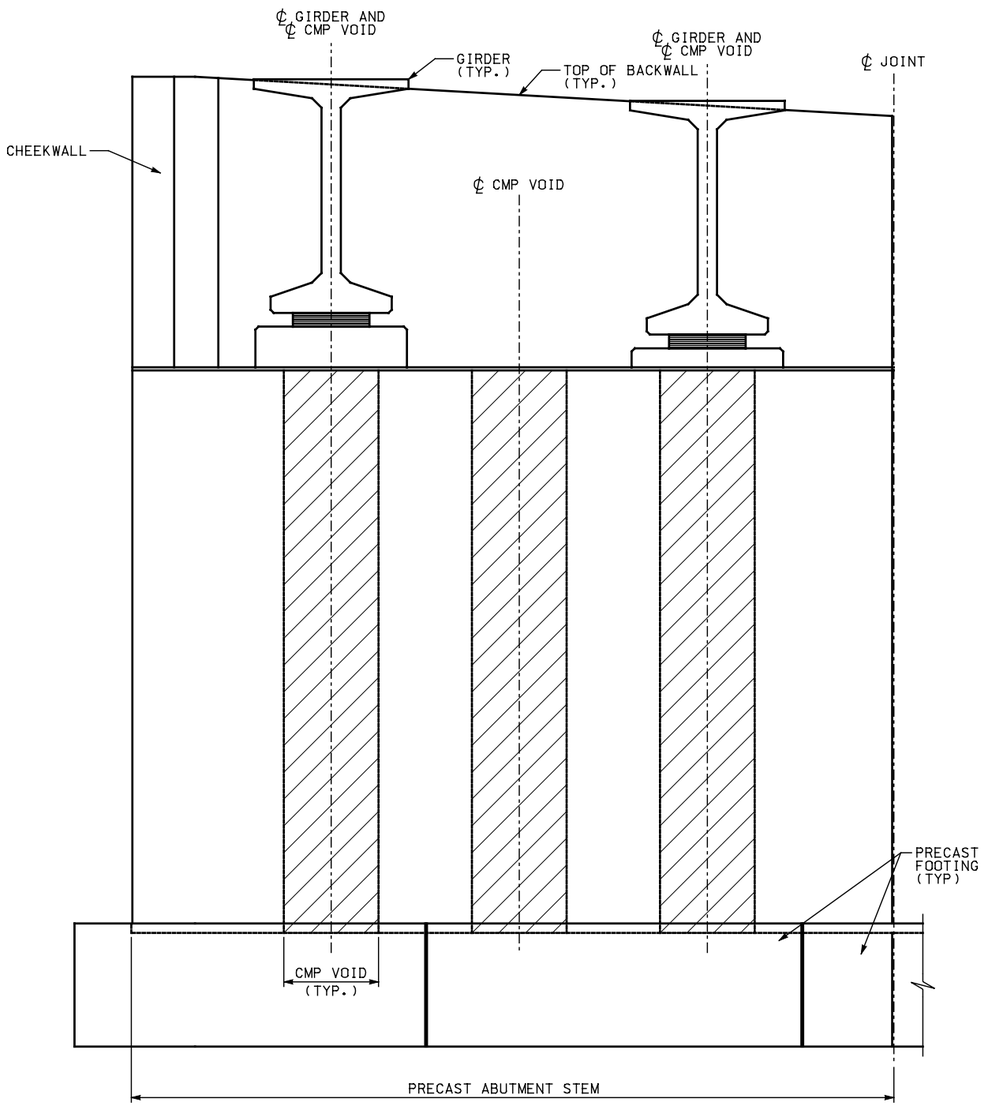

CANTILEVER END ABUTMENT BLOCK ELEVATION

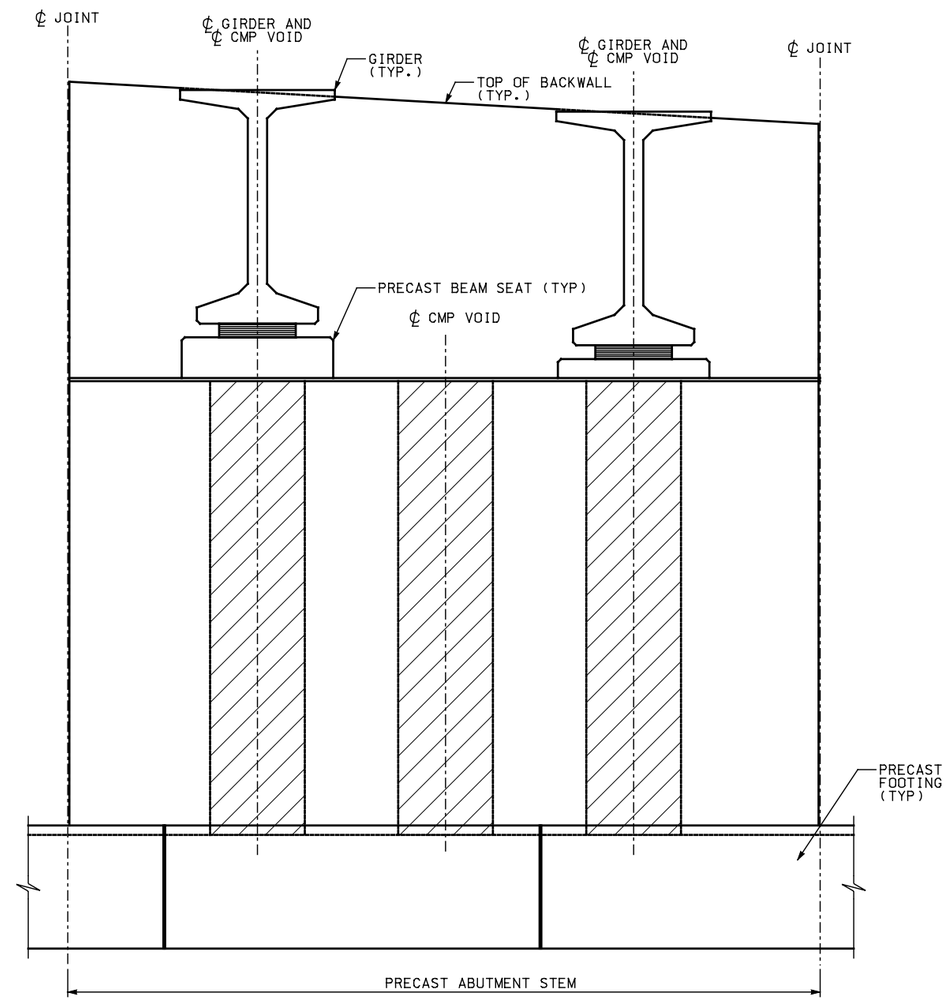

CANTILEVER MIDDLE ABUTMENT BLOCK ELEVATION

DRAFT – NOT RELEASED FOR CONSTRUCTION

REVISIONS			
NO.	DATE	APPR.	REMARKS

UTAH DEPARTMENT OF TRANSPORTATION
STANDARD DRAWINGS FOR ROAD AND BRIDGE CONSTRUCTION
SALT LAKE CITY, UTAH

RECOMMENDED FOR APPROVAL _____ DATE

CHAIRMAN STANDARDS COMMITTEE APPROVED _____ DATE

DEPUTY DIRECTOR

PRECAST CANTILEVER ABUTMENT DETAILS 1

STD. DWG. NO.
A – 3

$$files$$
$$date$$

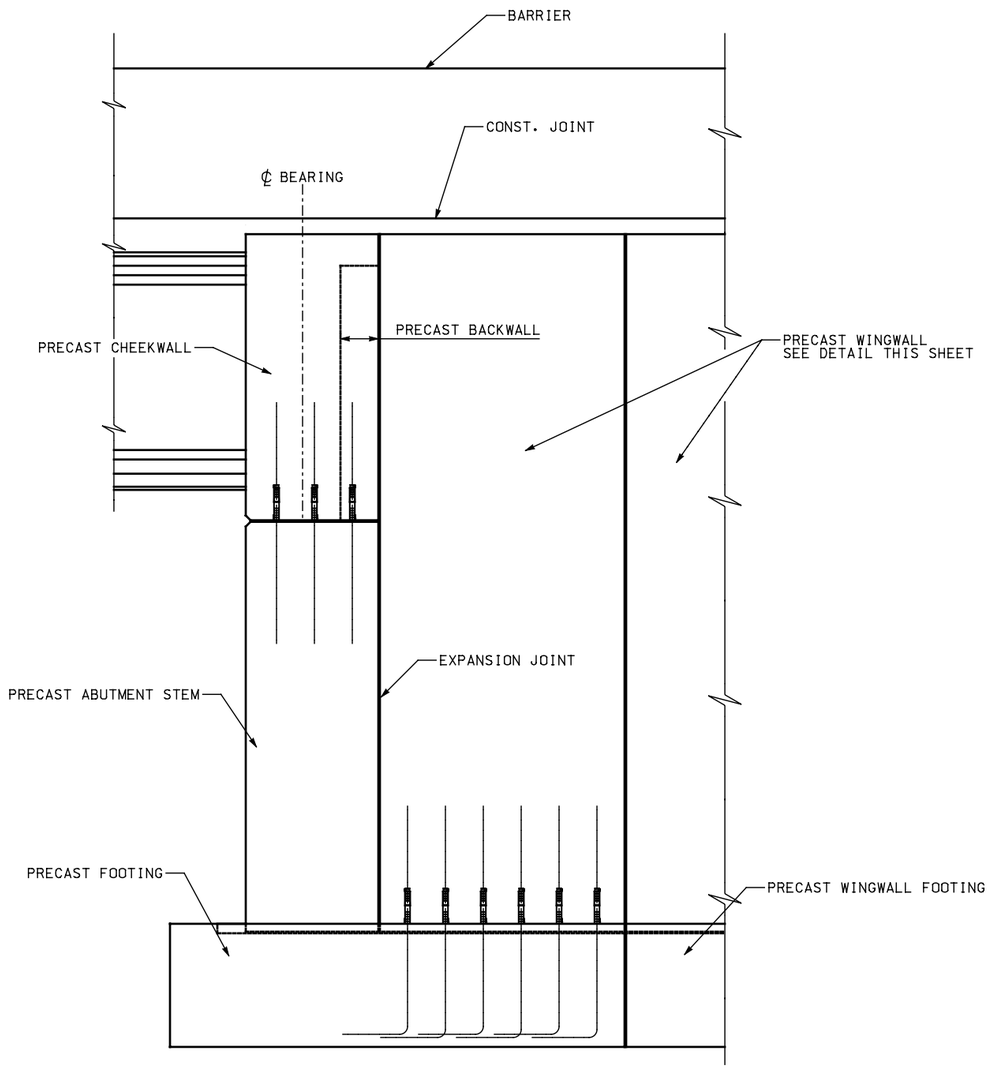

CANTILEVER ABUTMENT SECTION WITH PRESTRESSED CONCRETE GIRDER (D / A-1)

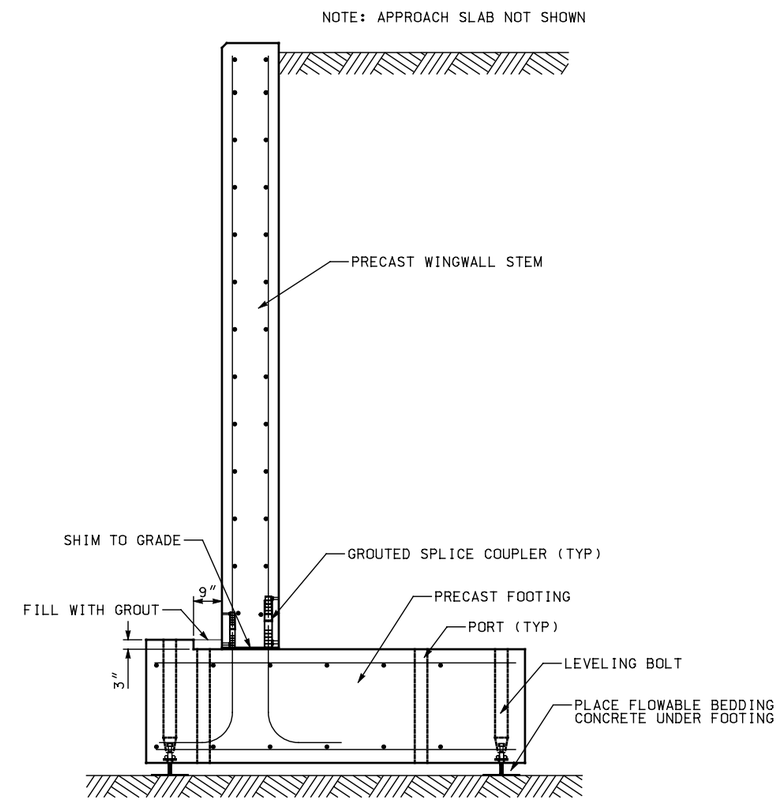

PRECAST WINGWALL SECTION (E / A-1)

REVISIONS

NO.	DATE	APPR.	REMARKS

DRAFT – NOT RELEASED FOR CONSTRUCTION

UTAH DEPARTMENT OF TRANSPORTATION
STANDARD DRAWINGS FOR ROAD AND BRIDGE CONSTRUCTION
SALT LAKE CITY, UTAH

RECOMMENDED FOR APPROVAL _____ DATE

CHAIRMAN STANDARDS COMMITTEE APPROVED _____ DATE

DEPUTY DIRECTOR

PRECAST CANTILEVER ABUTMENT WINGWALL DETAILS

STD. DWG. NO.
A – 4

$$date$$
$$file$$

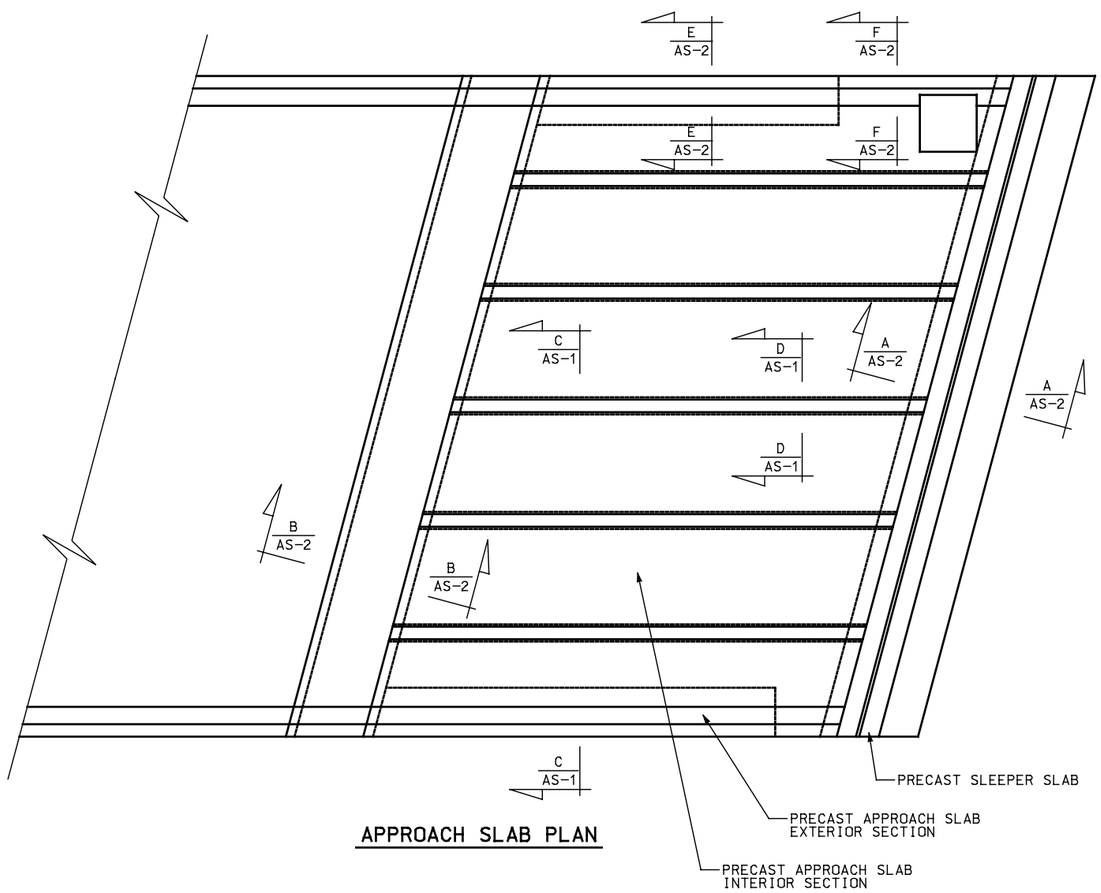

APPROACH SLAB PLAN

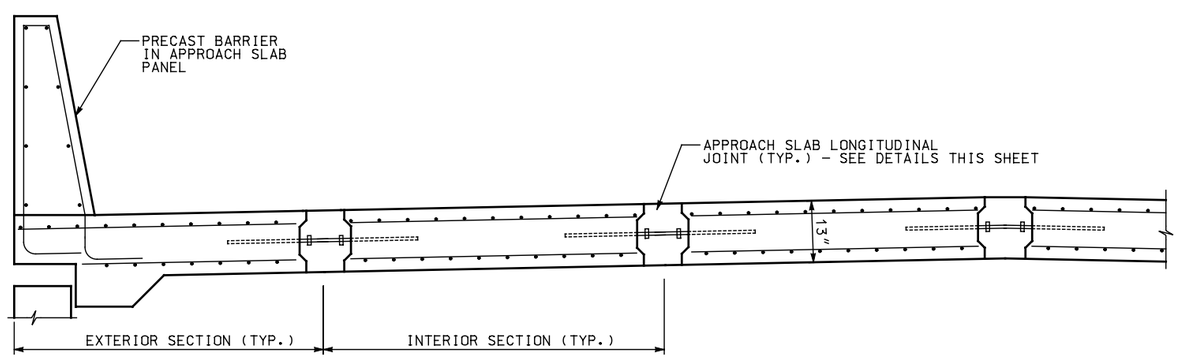

TYPICAL APPROACH SLAB SECTION C AS-1

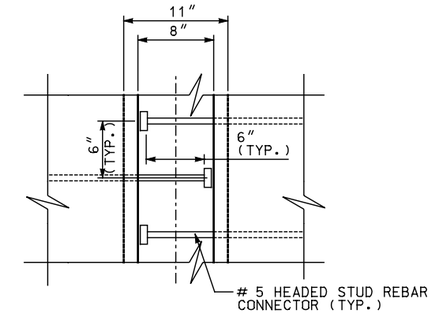

LONGITUDINAL JOINT PLAN D AS-1
OPTION 1

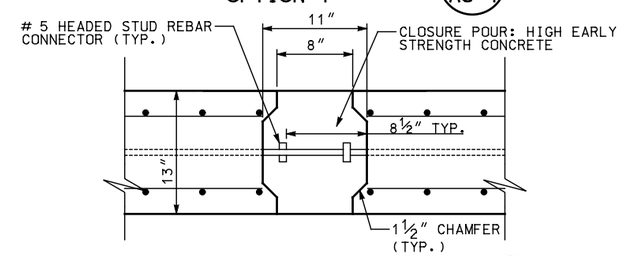

LONGITUDINAL JOINT SECTION D AS-1
OPTION 1

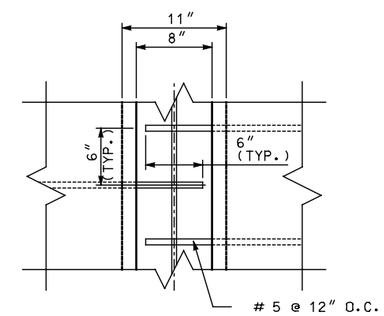

LONGITUDINAL JOINT PLAN D AS-1
OPTION 2

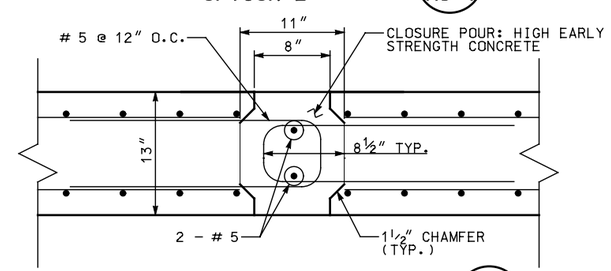

LONGITUDINAL JOINT SECTION D AS-1
OPTION 2

REVISIONS

NO.	DATE	APPR.	REMARKS

DRAFT - NOT RELEASED
FOR CONSTRUCTION

UTAH DEPARTMENT OF TRANSPORTATION
STANDARD DRAWINGS FOR ROAD AND BRIDGE CONSTRUCTION
SALT LAKE CITY, UTAH

RECOMMENDED FOR APPROVAL — DATE

CHAIRMAN STANDARDS COMMITTEE APPROVED — DATE

DEPUTY DIRECTOR

PRECAST APPROACH SLAB
TYPICAL DETAILS I

STD. DWG. NO.
AS - 1

$$files$$

$$date$$

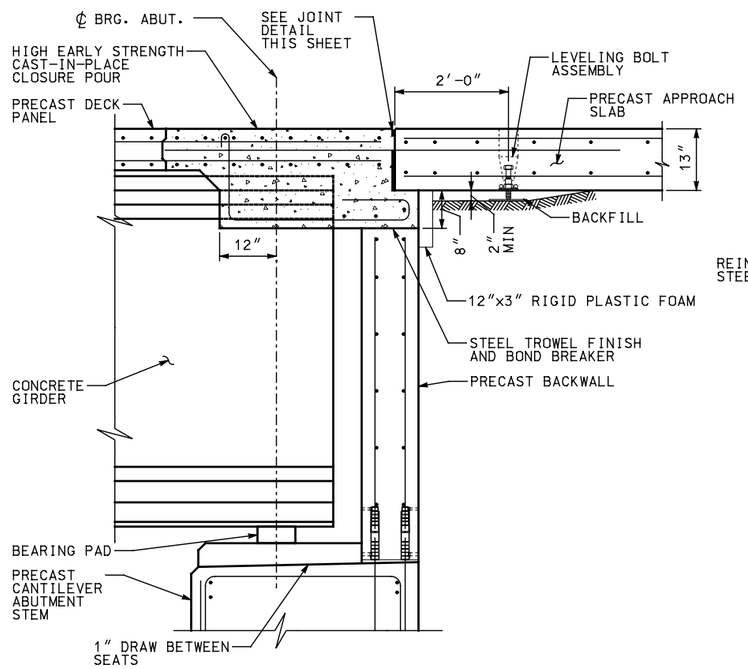

CANTILEVER ABUTMENT SECTION (B / A-1)

NOTE: CONCRETE GIRDER SHOWN STEEL BEAM SIMILAR.

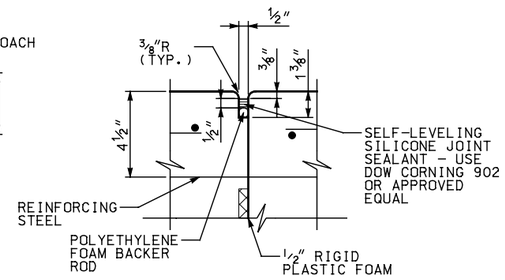

JOINT SEAL DETAIL
CLOSURE POUR

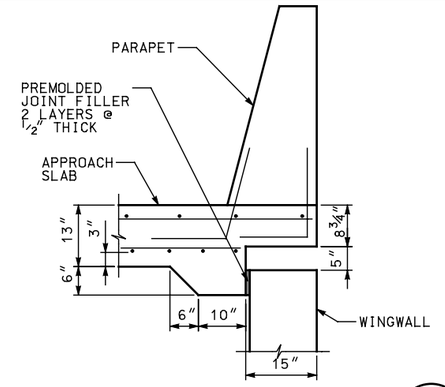

SECTION AT EDGE OF APPROACH SLAB OVER WINGWALL (E / AS-1)

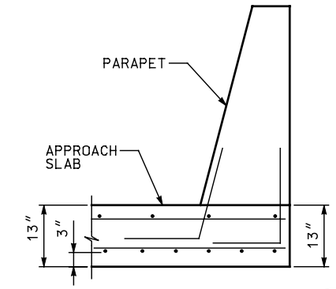

SECTION AT EDGE OF APPROACH SLAB (F / AS-1)

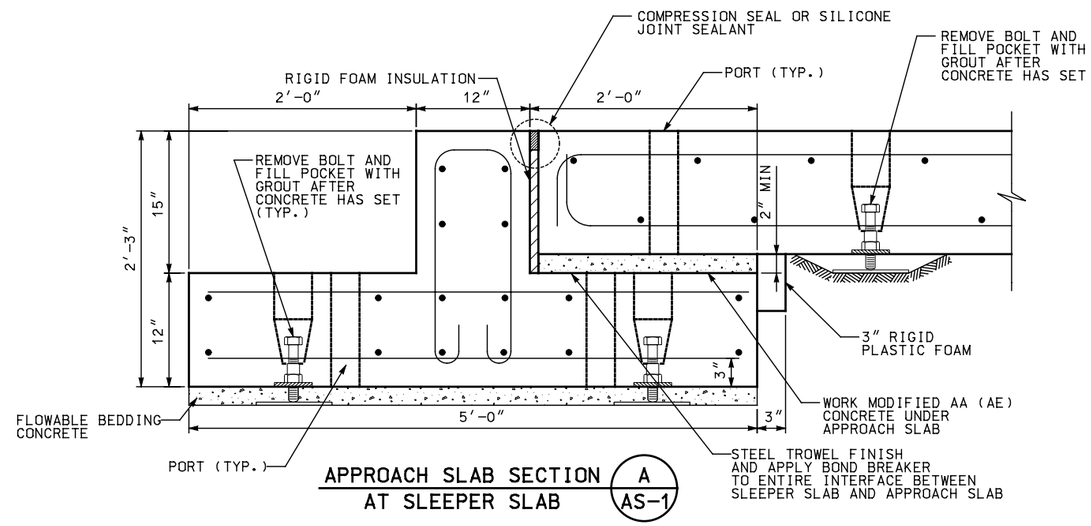

APPROACH SLAB SECTION AT SLEEPER SLAB (A / AS-1)

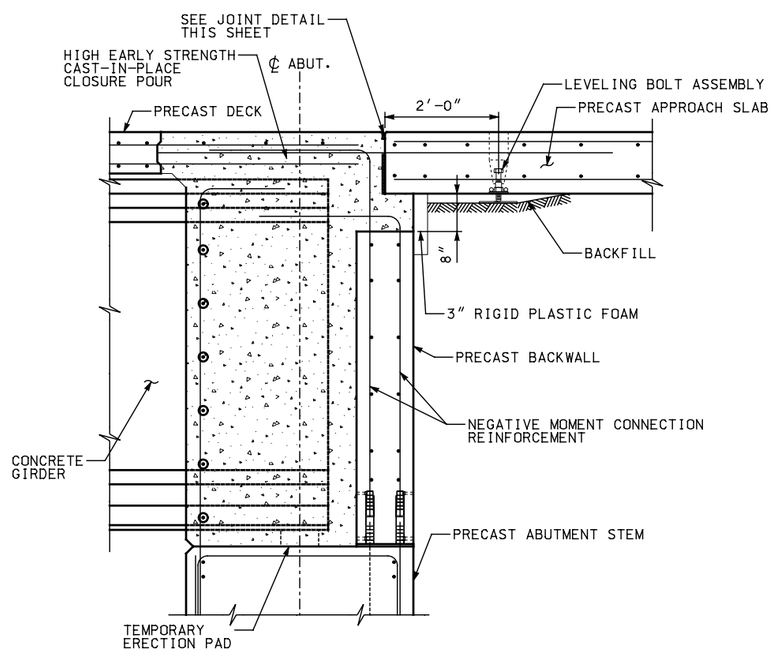

INTEGRAL ABUTMENT SECTION (B / A-1)

NOTE: CONCRETE GIRDER SHOWN STEEL BEAM SIMILAR.

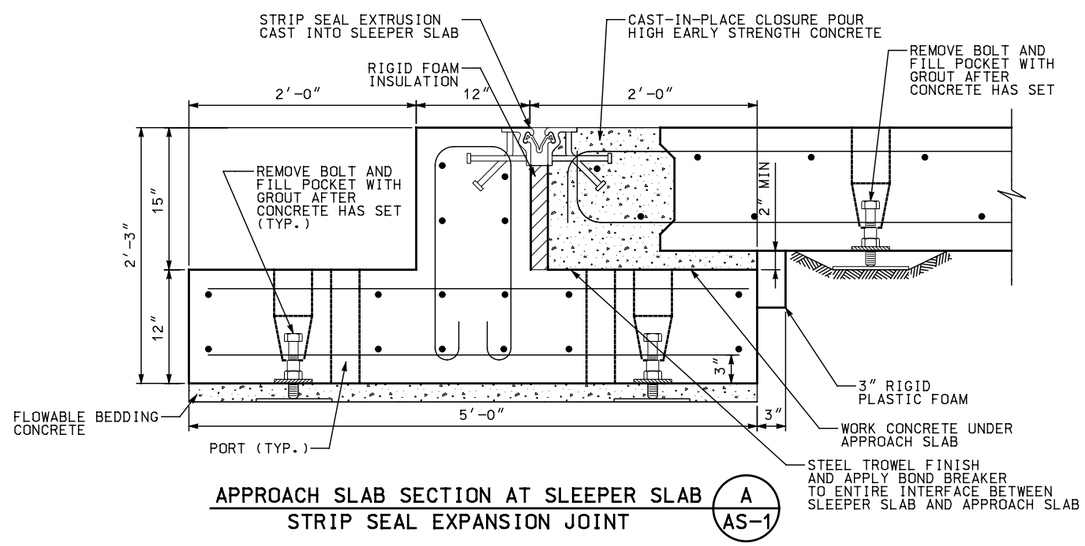

APPROACH SLAB SECTION AT SLEEPER SLAB
STRIP SEAL EXPANSION JOINT (A / AS-1)

NOTE: CONTRACTOR TO DETERMINE SIZE AND SPACING OF GROUT PORTS BASED ON FLOWABLE BEDDING CONCRETE

REVISIONS

NO.	DATE	APPR.	REMARKS

DRAFT – NOT RELEASED FOR CONSTRUCTION

UTAH DEPARTMENT OF TRANSPORTATION
STANDARD DRAWINGS FOR ROAD AND BRIDGE CONSTRUCTION
SALT LAKE CITY, UTAH

RECOMMENDED FOR APPROVAL — DATE
CHAIRMAN STANDARDS COMMITTEE APPROVED — DATE
DEPUTY DIRECTOR

PRECAST APPROACH SLAB
TYPICAL DETAILS II

STD. DWG. NO.
AS – 2

$$date$$
$$files$$

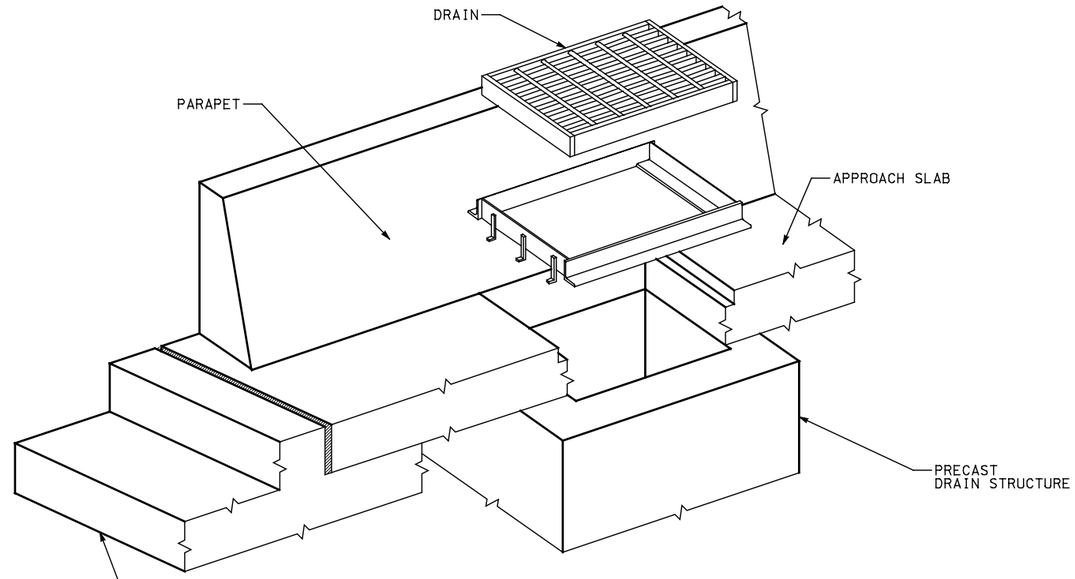

APPROACH SLAB DRAIN
ISOMETRIC VIEW

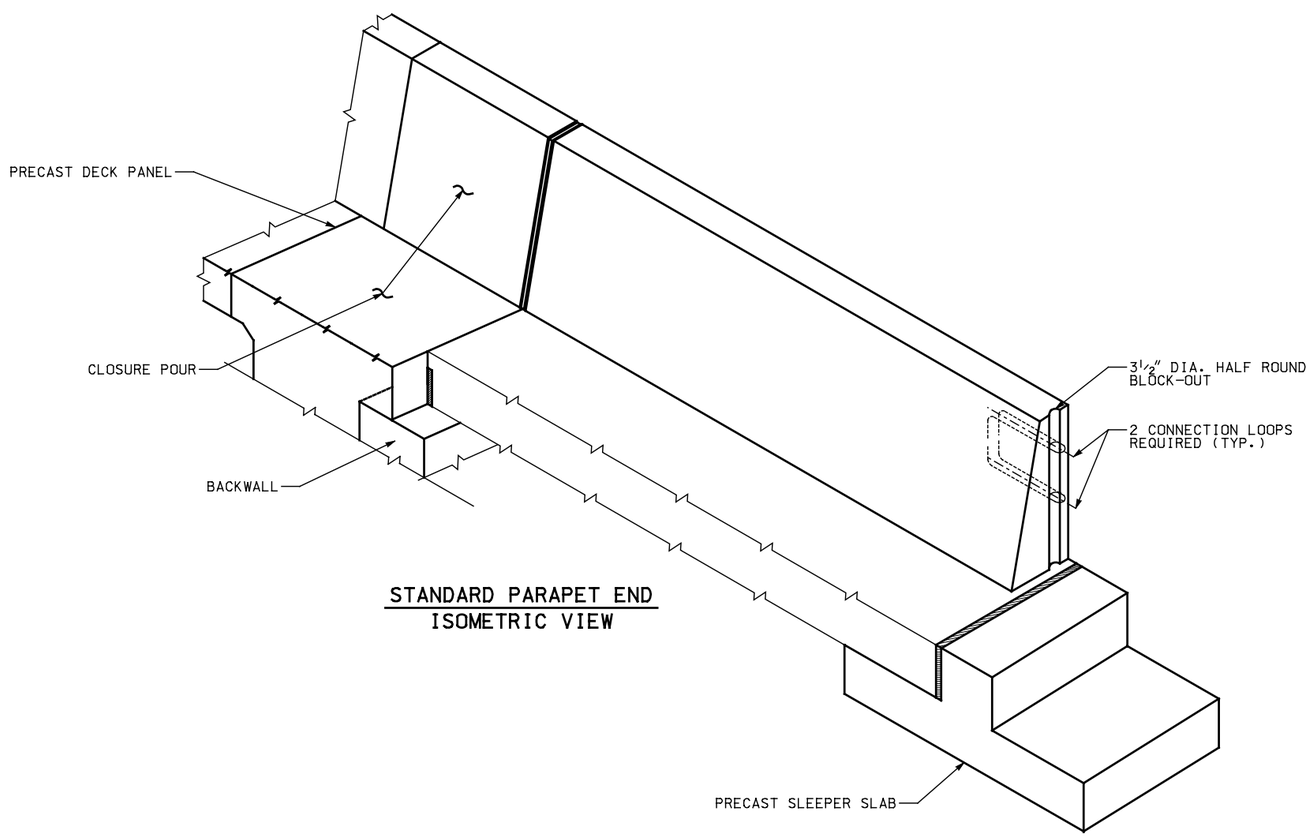

STANDARD PARAPET END
ISOMETRIC VIEW

DRAFT – NOT RELEASED
FOR CONSTRUCTION

REVISIONS

NO.	DATE	APPR.	REMARKS

UTAH DEPARTMENT OF TRANSPORTATION
STANDARD DRAWINGS FOR ROAD AND BRIDGE CONSTRUCTION
SALT LAKE CITY, UTAH

RECOMMENDED FOR APPROVAL _____ DATE

CHAIRMAN STANDARDS COMMITTEE APPROVED _____ DATE

DEPUTY DIRECTOR

PRECAST APPROACH SLAB
TYPICAL DETAILS III

STD. DWG. NO.
AS – 3

$$date$$ $$file$$

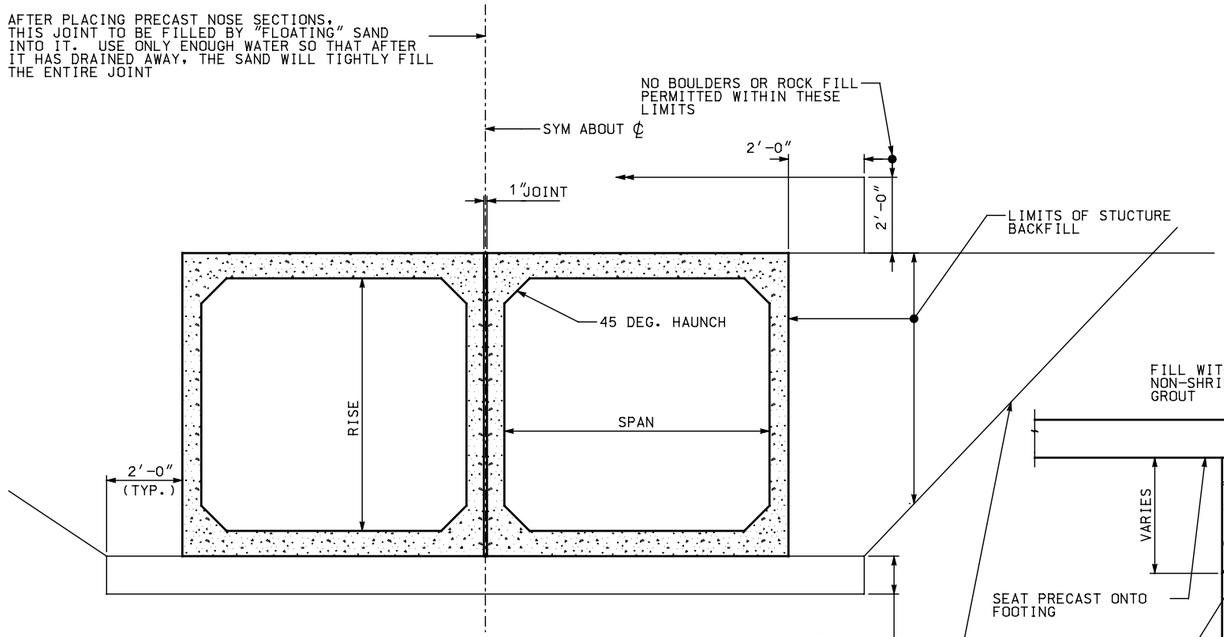

PRECAST BOX CULVERT
TYPICAL SECTION

NOTE: TWIN CELL CONFIGURATION SHOWN
SINGLE CELL CONFIGURATIONS SIMILAR

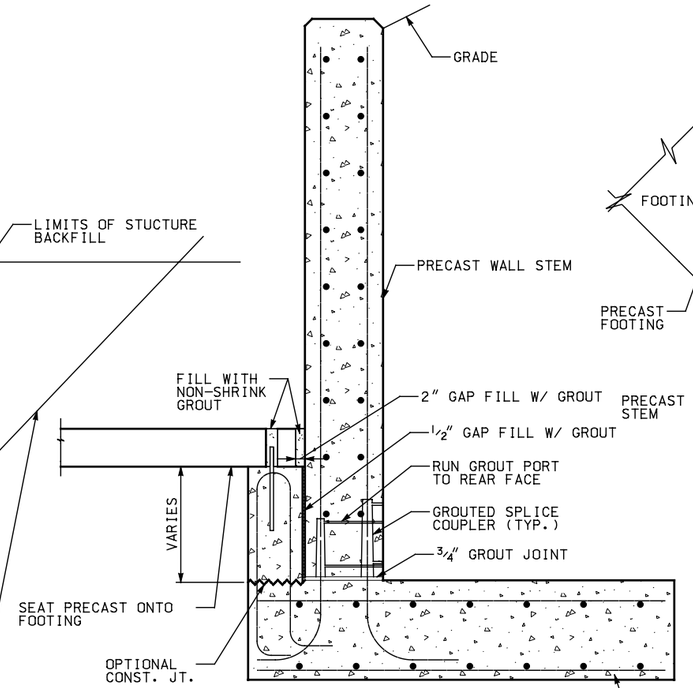

PRECAST WINGWALL SECTION B/–

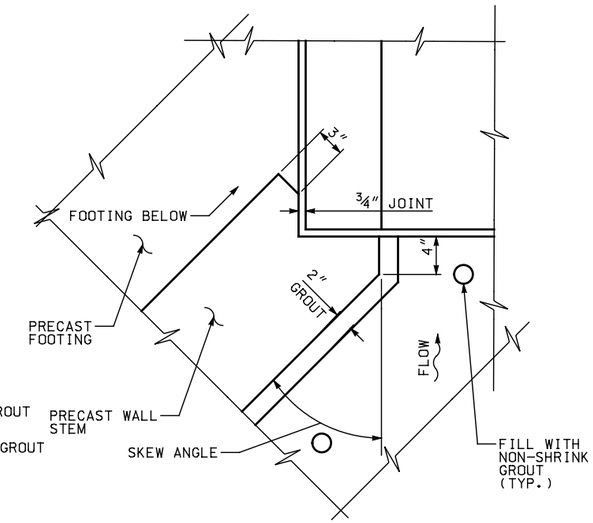

DETAIL A

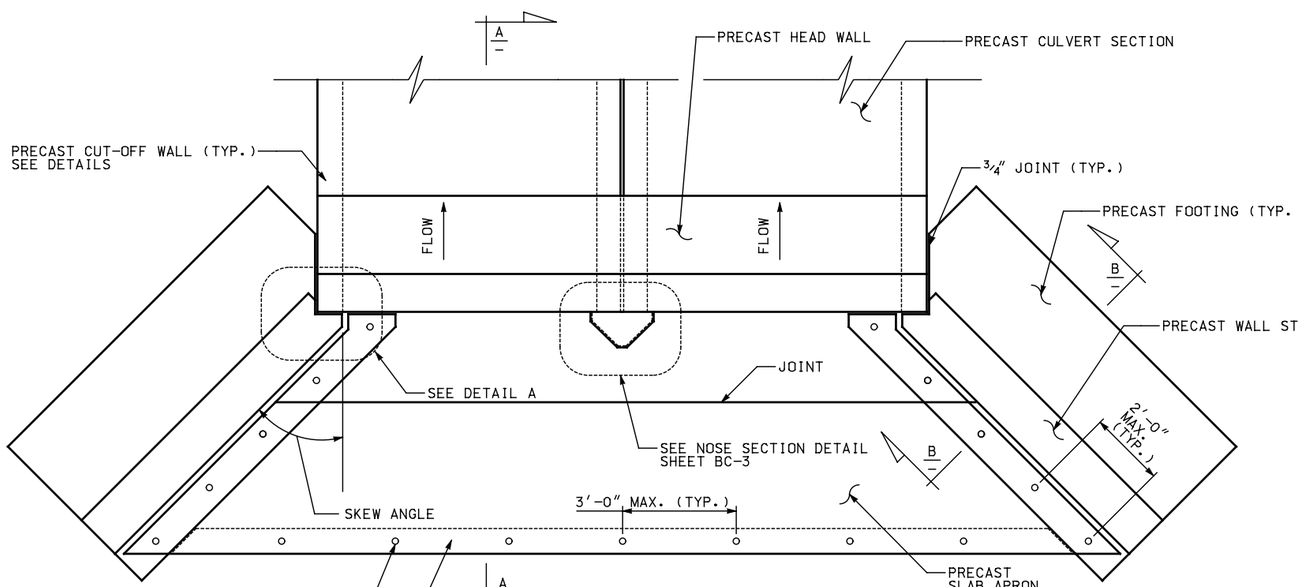

PLAN OF PRECAST BOX CULVERT
TYPE I

NOTE: TWIN CELL CULVERT SHOWN.
SINGLE CELL SIMILAR.

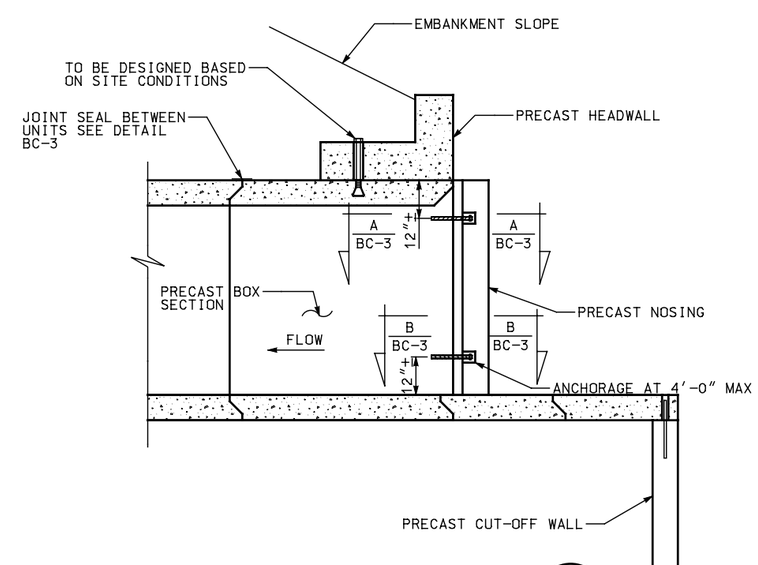

LONGITUDINAL SECTION A/–
PRECAST BOX CULVERT TYPE I

DRAFT – NOT RELEASED FOR CONSTRUCTION

NO.	DATE	APPR.	REMARKS

REVISIONS

UTAH DEPARTMENT OF TRANSPORTATION
STANDARD DRAWINGS FOR ROAD AND BRIDGE CONSTRUCTION
SALT LAKE CITY, UTAH

RECOMMENDED FOR APPROVAL — DATE
CHAIRMAN STANDARDS COMMITTEE APPROVED — DATE
DEPUTY DIRECTOR

PRECAST BOX CULVERT
TYPE I – FLARED WINGWALLS

STD. DWG. NO.
BC – 1

$$file$$
$$date$$

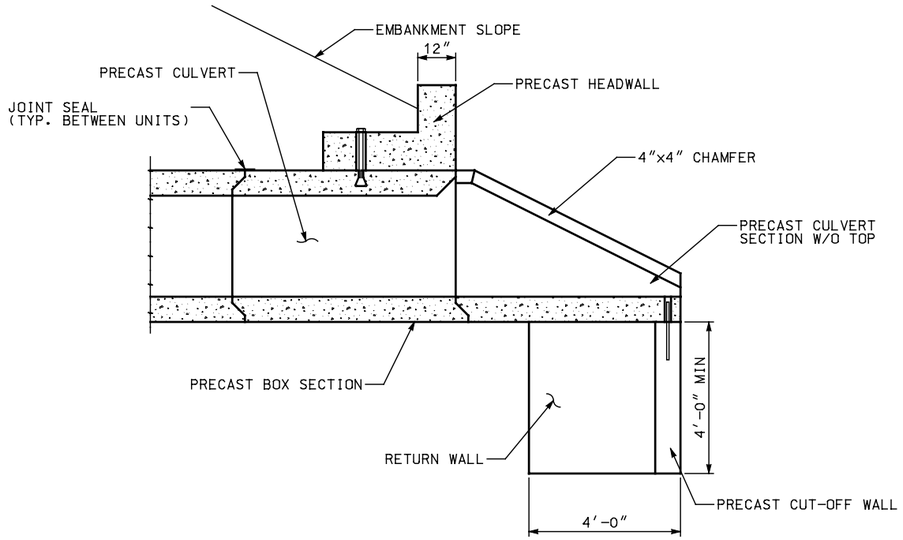

PRECAST BOX CULVERT TYPE II
LONGITUDINAL SECTION

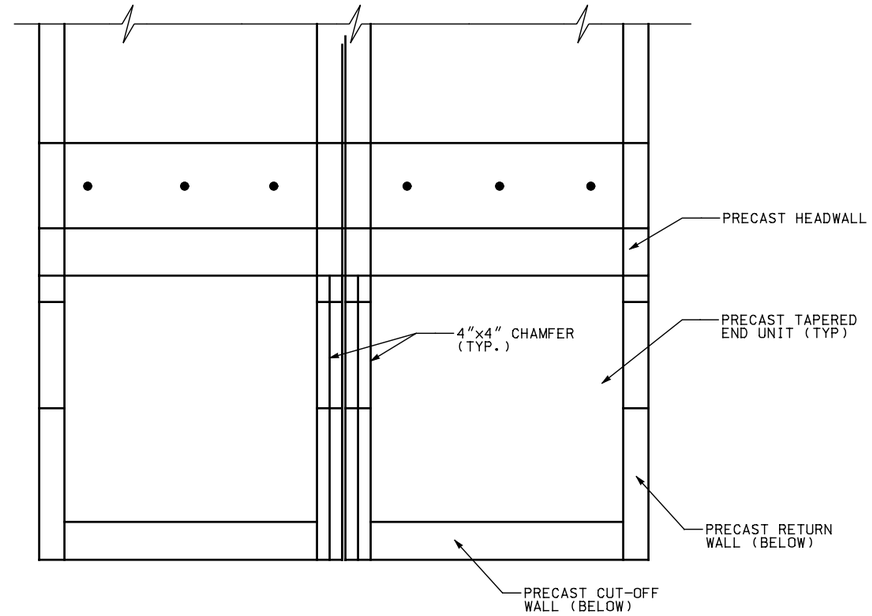

PLAN – PRECAST CULVERT
TYPE II

NOTE: DOUBLE CELL CULVERT SHOWN SINGLE CELL SIMILAR

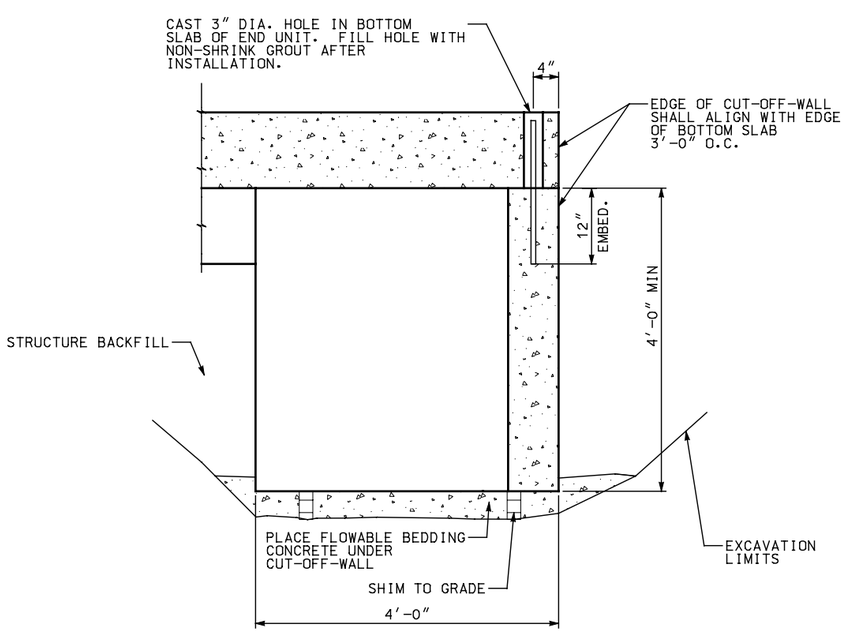

PRECAST CUT-OFF WALL DETAIL
WITH RETURN WALL

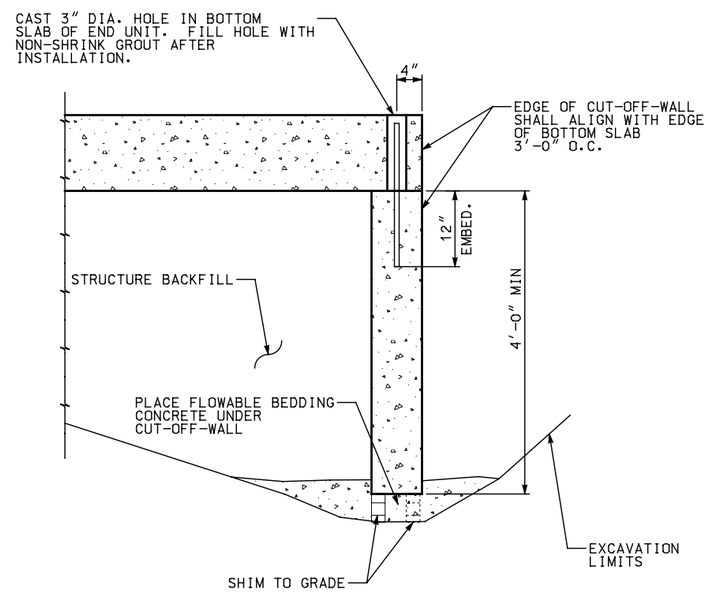

PRECAST CUT-OFF WALL DETAIL
WITHOUT RETURN WALL

NOTE: BRACE CUT OFF WALL IN PLACE DURING BACKFILLING. PLACE BACKFILL EQUALLY ON BOTH SIDES.

NO.	DATE	APPR.	REMARKS

REVISIONS

DRAFT – NOT RELEASED FOR CONSTRUCTION

UTAH DEPARTMENT OF TRANSPORTATION
STANDARD DRAWINGS FOR ROAD AND BRIDGE CONSTRUCTION
SALT LAKE CITY, UTAH

RECOMMENDED FOR APPROVAL _____ DATE

CHAIRMAN STANDARDS COMMITTEE APPROVED _____ DATE

DEPUTY DIRECTOR _____ DATE

PRECAST BOX CULVERT
TYPE II PARALLEL WINGWALLS

STD. DWG. NO.
BC – 2

$$date$$
$$file$$

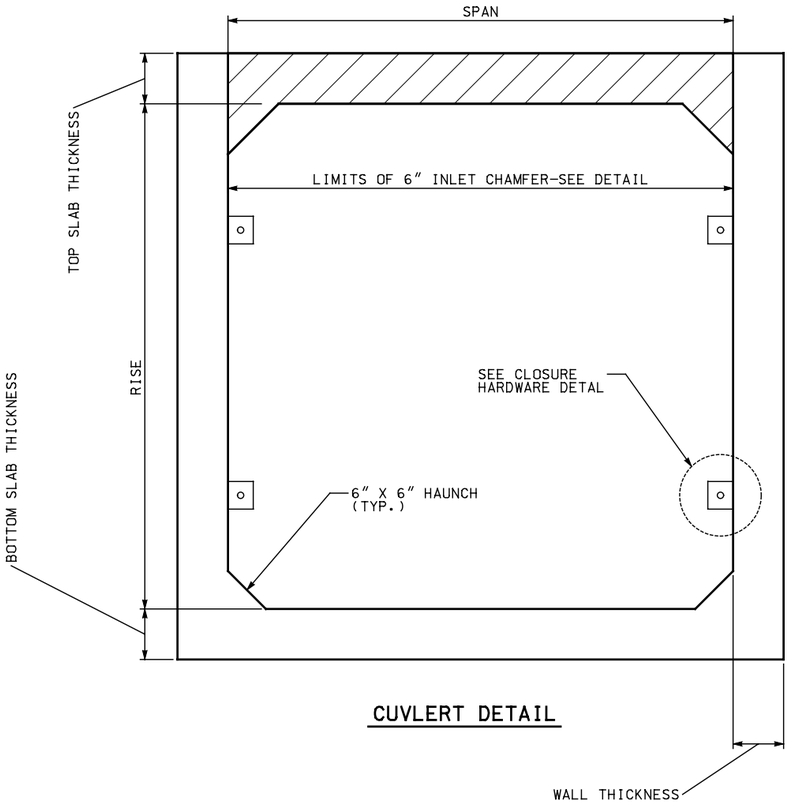

CUVLERT DETAIL

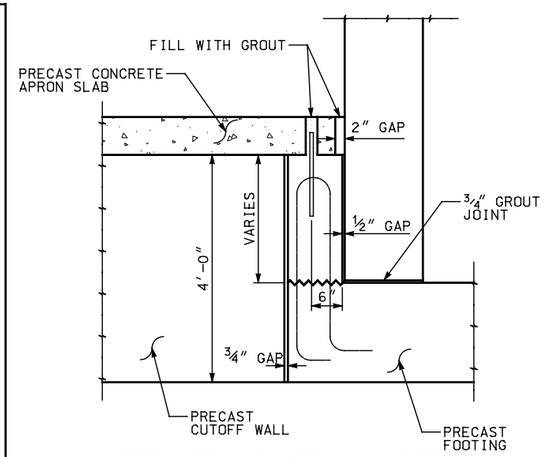

PRECAST CUT-OFF WALL DETAIL

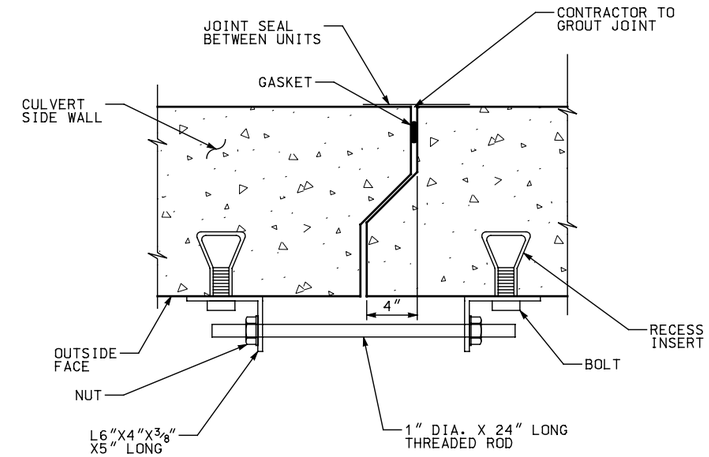

CLOSURE HARDWARE DETAIL

NOTES:
1. CLOSURE HARDWARE IS TEMPORARY AND IS TO BE REMOVED AFTER INSTALLATION
2. BOXES MUST BE PULLED TO A 1/2" GAP TO ACHIEVE DIMENSIONS ON THIS PLAN

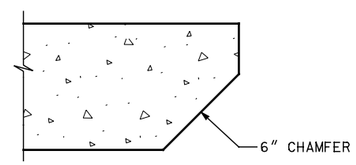

TOP SLAB INLET EDGE DETAIL

NOTE: FOR TOP SLAB LESS THAN 8", USE 4" CHAMFER

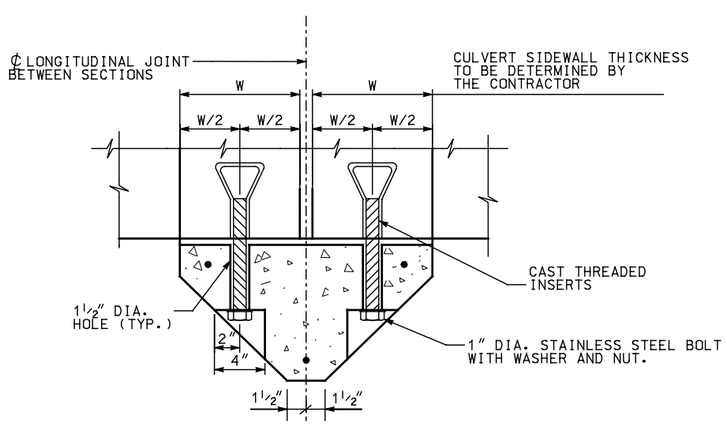

RECAST BOX CULVERT — PRECAST NOSE SECTION (B / BC-1)

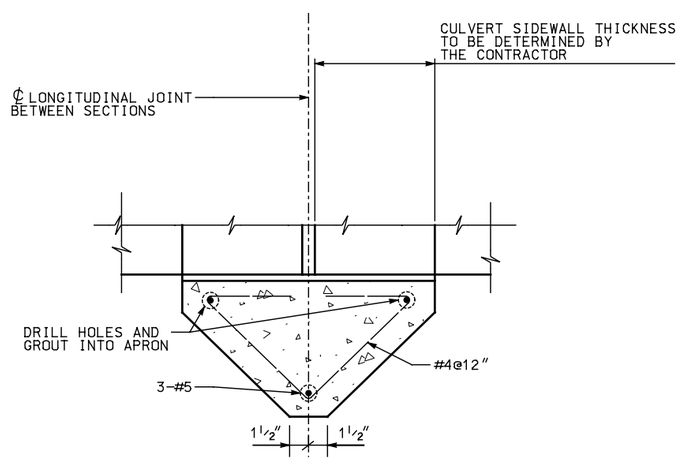

RECAST BOX CULVERT — PRECAST NOSE SECTION (B / BC-1)

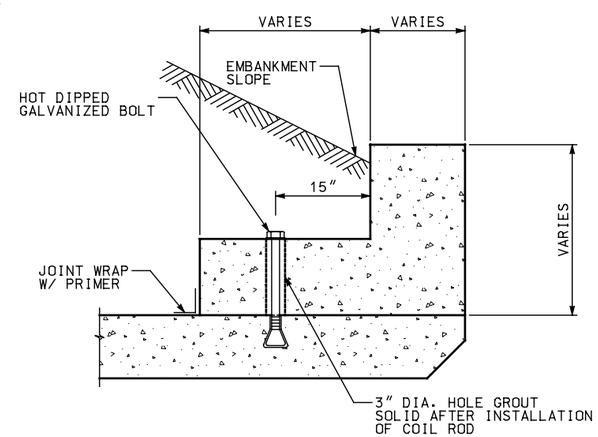

HEADWALL DETAIL

NOTE: HEADWALL DESIGN BASED ON SITE CONDITIONS

REVISIONS

NO.	DATE	APPR.	REMARKS

DRAFT – NOT RELEASED FOR CONSTRUCTION

UTAH DEPARTMENT OF TRANSPORTATION
STANDARD DRAWINGS FOR ROAD AND BRIDGE CONSTRUCTION
SALT LAKE CITY, UTAH

RECOMMENDED FOR APPROVAL — DATE
CHAIRMAN STANDARDS COMMITTEE APPROVED — DATE
DEPUTY DIRECTOR

PRECAST BOX CULVERT
TYPICAL DETAILS

STD. DWG. NO.
BC – 3

$$file$$
$$date$$

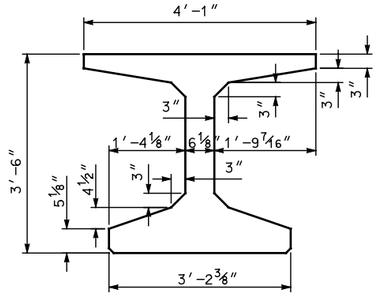

UBT42

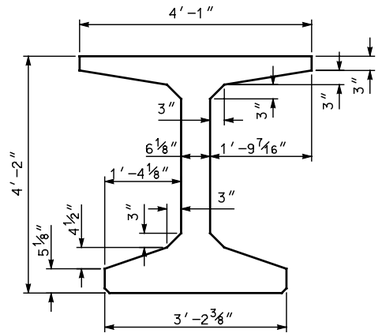

UBT50

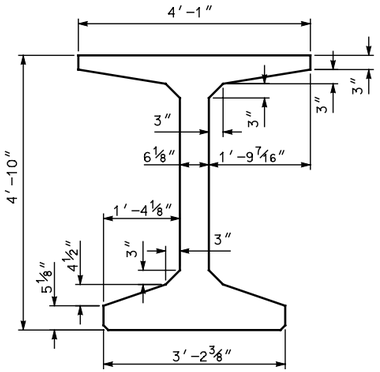

UBT58

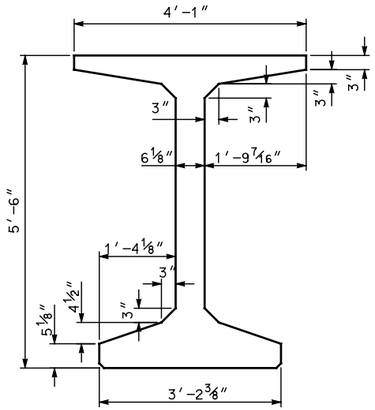

UBT66

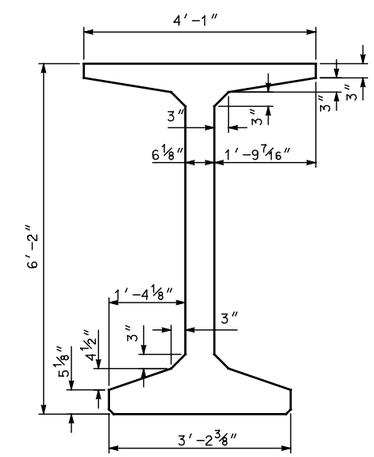

UBT74

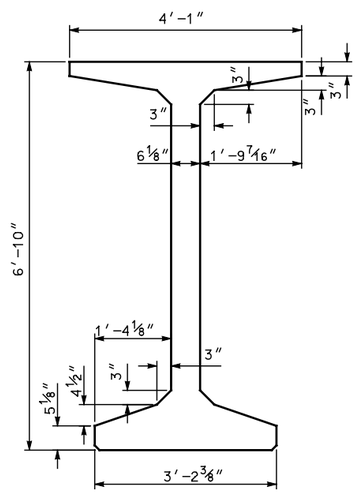

UBT82

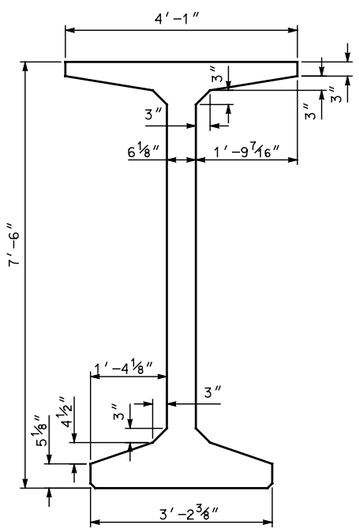

UBT90

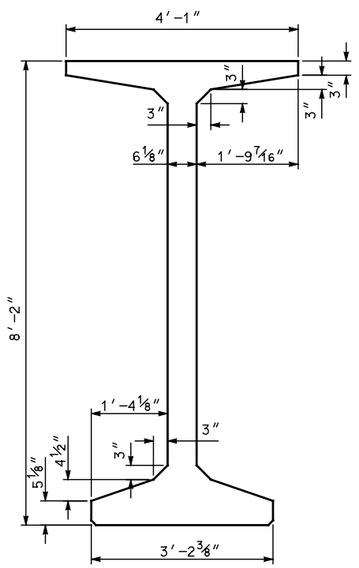

UBT98

BEAM TYPE	DEPTH (in)	WEIGHT (Lbs/Ft)	AREA (in^2)	Ix c.g. (in^4)	Iy c.g. (in^4)	Yt (in)	Yb (in)	St (in^3)	Sb (in^3)	Max Span (Ft)
UBT42	42	758	728	183641	71405	21.64	20.36	8486	9020	X
UBT50	50	809	777	282557	71558	25.85	24.15	10931	11700	X
UBT58	58	860	826	406264	71712	30.03	27.97	13527	14527	X
UBT66	66	911	875	556337	71865	34.20	31.80	16269	17493	X
UBT74	74	962	924	734353	72018	38.34	35.66	19152	20595	X
UBT82	82	1013	973	941887	72171	42.47	39.53	22176	23830	X
UBT90	90	1064	1022	1180511	72324	46.59	43.41	25337	27196	X
UBT98	98	1115	1071	1451798	72478	50.70	47.30	28635	30694	X

REVISIONS

NO.	DATE	APPR.	REMARKS

DRAFT – NOT RELEASED
FOR CONSTRUCTION

UTAH DEPARTMENT OF TRANSPORTATION
STANDARD DRAWINGS FOR ROAD AND BRIDGE CONSTRUCTION
SALT LAKE CITY, UTAH

RECOMMENDED FOR APPROVAL _____ DATE

CHAIRMAN STANDARDS COMMITTEE
APPROVED _____ DATE

DEPUTY DIRECTOR

PRETENSIONED BULB TEE GIRDERS
STANDARD BEAM SIZES

STD. DWG. NO.
BT – 1

$$file$$

$$date$$

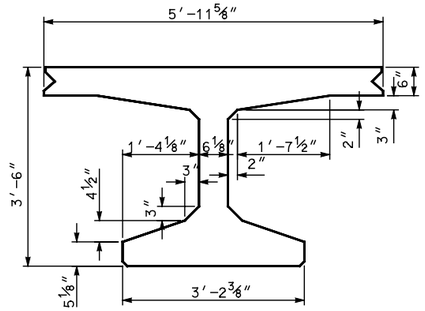

UDBT42

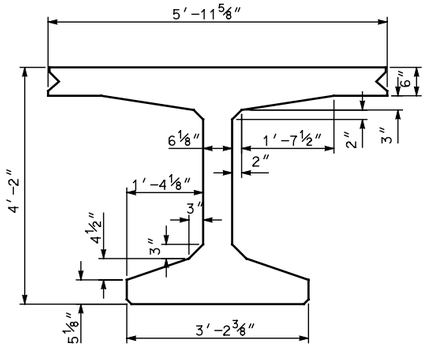

UDBT50

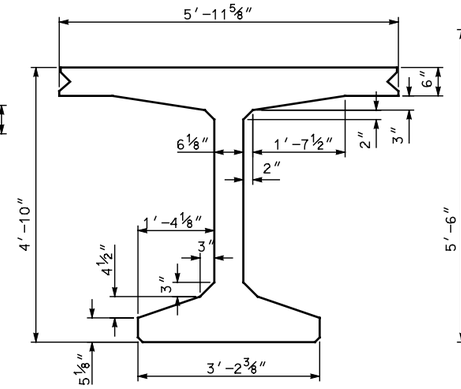

UDBT58

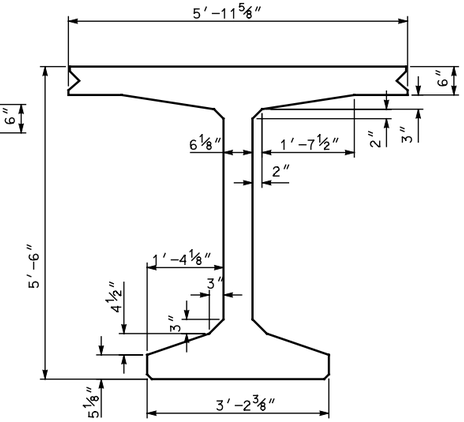

UDBT68

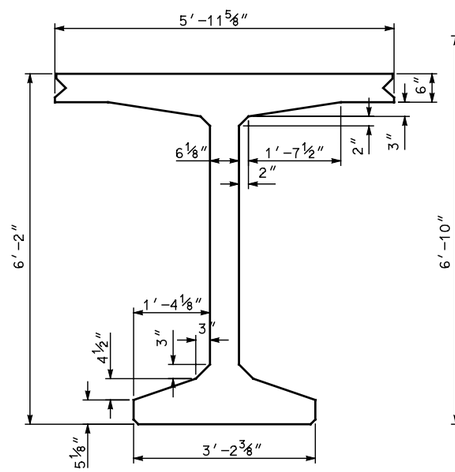

UDBT74

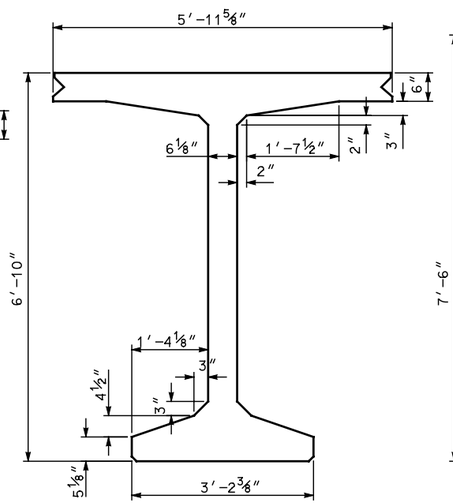

UDBT82

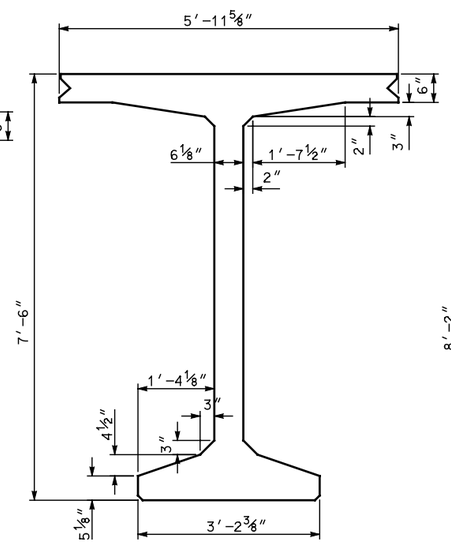

UDBT90

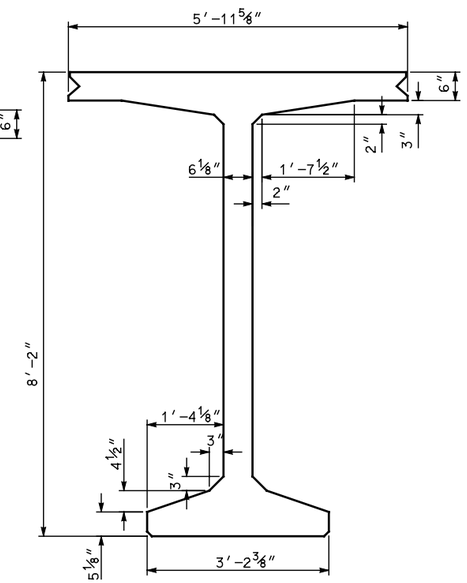

UDBT98

BEAM TYPE	DEPTH (in)	WEIGHT (Lbs/Ft)	AREA (in²)	Ix c.g. (in⁴)	Iy c.g. (in⁴)	Yt (in)	Yb (in)	St (in³)	Sb (in³)	Max Span (Ft)
UDBT42	42	1014	974	238350	212227	17.33	24.67	13753	9662	X
UDBT50	50	1065	1023	368257	212378	20.73	29.27	17761	12583	X
UDBT58	58	1116	1072	530226	212532	24.19	33.81	21918	15683	X
UDBT66	66	1167	1121	725909	212685	27.70	38.30	26210	18951	X
UDBT74	74	1218	1170	956946	212838	31.24	42.76	30630	22381	X
UDBT82	82	1269	1219	1224969	212992	34.82	47.18	35175	25966	X
UDBT90	90	1320	1268	1531594	213145	38.44	51.56	39844	29705	X
UDBT98	98	1371	1317	1878435	213299	42.08	55.92	44636	33594	X

REVISIONS

NO.	DATE	APPR.	REMARKS

DRAFT – NOT RELEASED
FOR CONSTRUCTION

UTAH DEPARTMENT OF TRANSPORTATION
STANDARD DRAWINGS FOR ROAD AND BRIDGE CONSTRUCTION
SALT LAKE CITY, UTAH

RECOMMENDED FOR APPROVAL _____ DATE

CHAIRMAN STANDARDS COMMITTEE APPROVED _____ DATE

DEPUTY DIRECTOR

DECK BULB TEE GIRDERS
STANDARD BEAM SIZES

STD. DWG. NO.
BT – 2

$$file$$

$$date$$

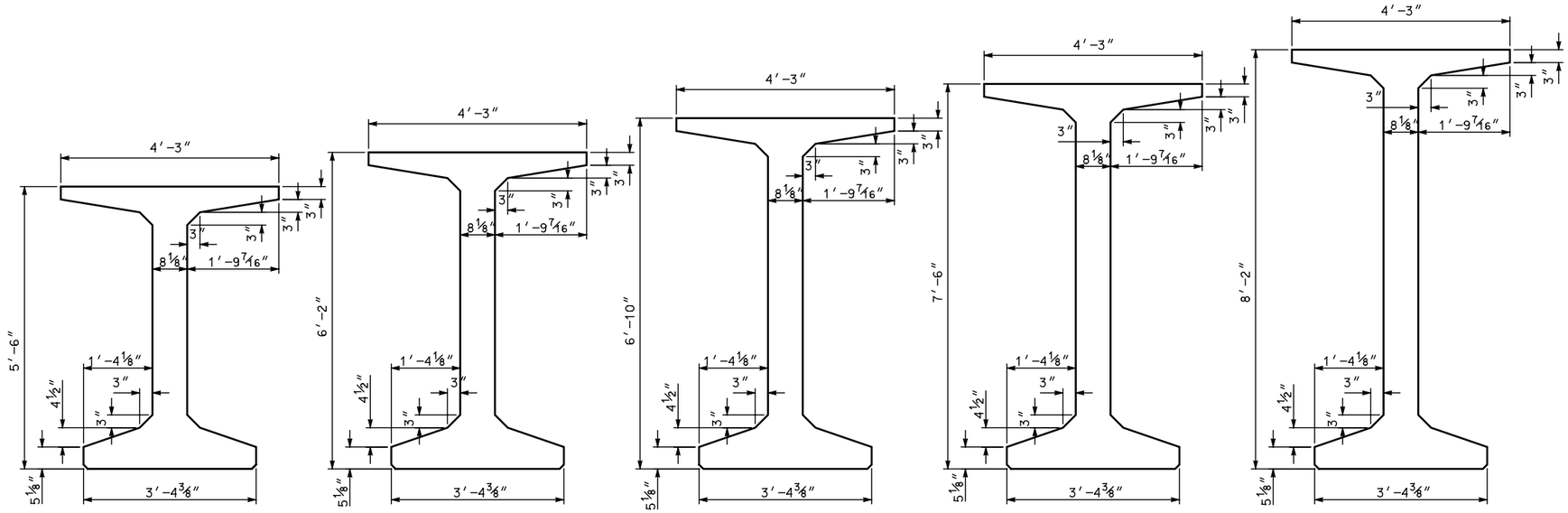

UBT66-PT

UBT74-PT

UBT82-PT

UBT90-PT

UBT98-PT

BEAM TYPE	DEPTH (in)	WEIGHT (Lbs/Ft)	AREA (in^2)	Ix c.g. (in^4)	Iy c.g. (in^4)	Yt (in)	Yb (in)	St (in^3)	Sb (in^3)	Max Span (Ft)
UBT66-PT	66	1048	1007	604417	84347	34.04	31.96	17756	18911	X
UBT74-PT	74	1116	1072	802120	84704	38.16	35.84	21021	22379	X
UBT82-PT	82	1184	1137	1034086	85062	42.26	39.74	24469	26022	X
UBT90-PT	90	1252	1202	1302399	85420	46.35	43.65	28098	29840	X
UBT98-PT	98	1319	1267	1609143	85777	50.44	47.56	31904	33832	X

REVISIONS

NO.	DATE	APPR.	REMARKS

DRAFT – NOT RELEASED FOR CONSTRUCTION

UTAH DEPARTMENT OF TRANSPORTATION
STANDARD DRAWINGS FOR ROAD AND BRIDGE CONSTRUCTION
SALT LAKE CITY, UTAH

RECOMMENDED FOR APPROVAL _____ DATE

CHAIRMAN STANDARDS COMMITTEE APPROVED _____ DATE

DEPUTY DIRECTOR _____ DATE

POST-TENSIONED BULB TEE GIRDERS
STANDARD BEAM SIZES

STD. DWG. NO.
BT – 3

$$date$$ $$file$$

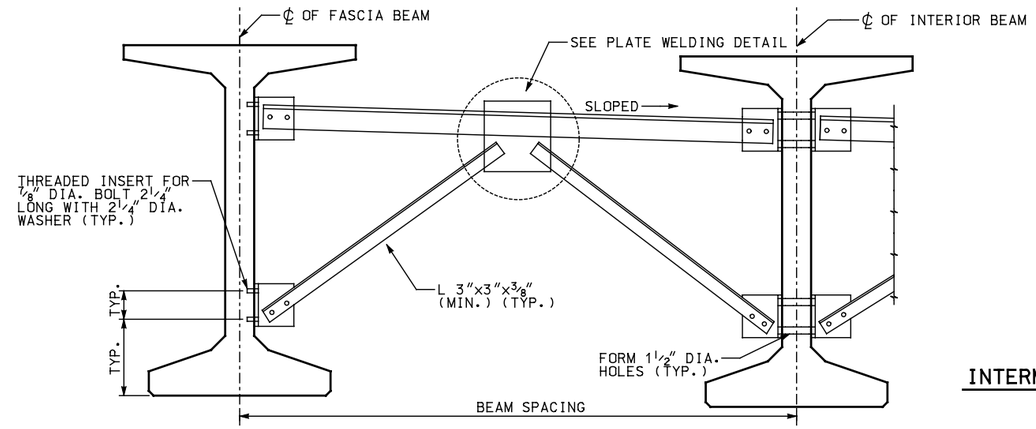

INTERMEDIATE DIAPHRAGM – TYPE II

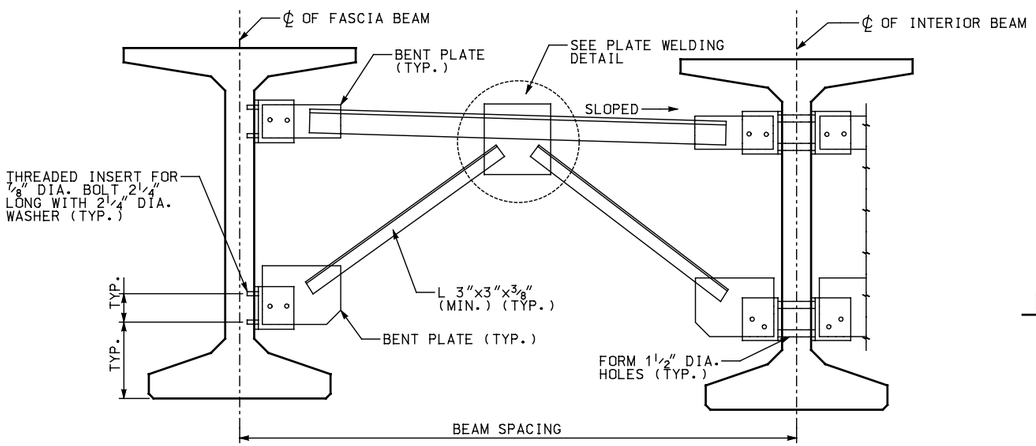

SKEWED INTERMEDIATE DIAPHRAGM – TYPE II

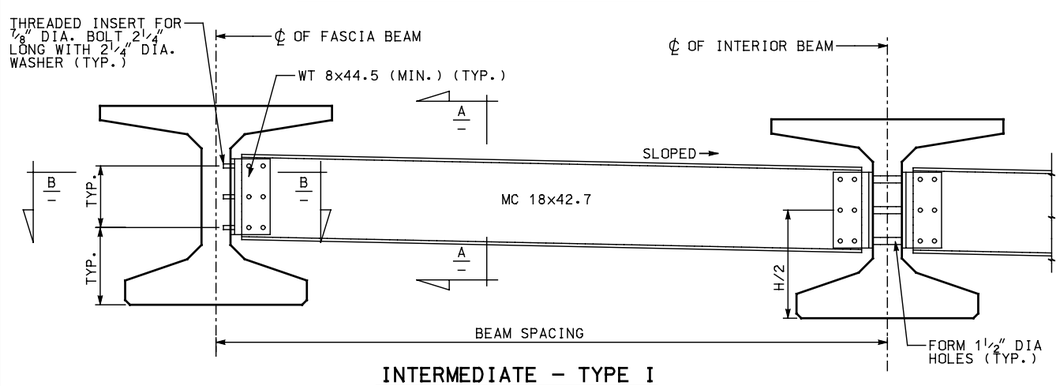

INTERMEDIATE – TYPE I

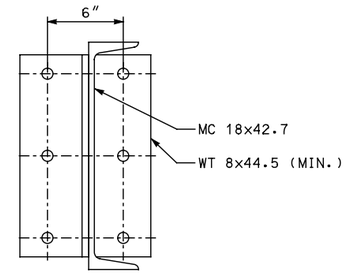

INTERMEDIATE DIAPHRAGM SECTION A

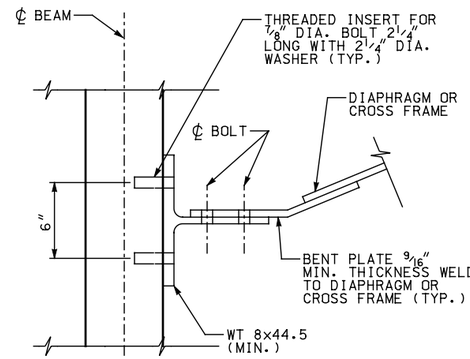

INTERMEDIATE DIAPHRAGM SECTION B

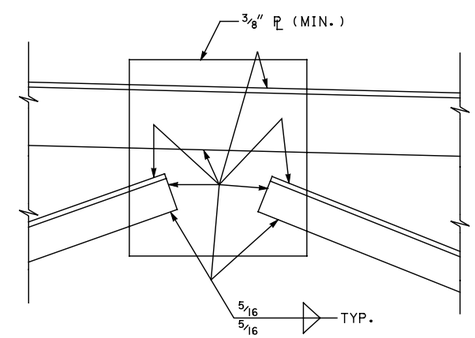

PLATE WELDING DETAIL

DIAPHRAGM CONNECTIONS TO BE LOCATED ON THE GIRDER WEB. DESIGNER SHALL VERIFY THREAD INSERT CAPACITIES SPECIFIED AND MODIFY THEM WHERE APPLICABLE.

OPENINGS MAY BE CUT IN THE WEBS OF END DIAPHRAGMS TO ACCOMMODATE THE UTILITIES.

THE BENT P SHOWN IN SECTION B–B IS NOT NECESSARY FOR 0° SKEWS.

FOR SKEWS MORE THAN 20°, MECHANICAL CONNECTORS WILL BE REQUIRED ON INTERIOR BEAMS.

NOTES:

1. INTERMEDIATE AND END DIAPHRAGMS TO BE FABRICATED WITH THEIR ENDS VERTICAL.
2. FIELD DRILLED HOLES TO BE PERMITTED AT NO ADDITIONAL EXPENSE. ALL OTHER HOLES TO BE SHOP DRILLED.
3. THREADED INSERTS FOR 7/8" DIA. H.S. BOLTS TO BE CAST IN THE PRECAST BEAMS. THE 7/8" DIA. H.S. THREADED INSERTS TO PROVIDE A MINIMUM ULTIMATE TENSILE CAPACITY OF 11 KIPS IN 7.5 KSI CONCRETE.
4. THREADED INSERTS IN BEAMS TO BE MECHANICAL CONNECTORS AND GALVANIZED IN ACCORDANCE WITH ASTM A 123.
5. INSERTS USED BENEATH A DECK JOINT THAT ARE WITHIN ONE BEAM DEPTH OF THE DECK JOINT TO BE STAINLESS STEEL IN ACCORDANCE WITH N.Y.S. STD. SPECIFICATIONS SUBSECTION 715-16. ALL OTHER INSERTS SHALL BE GALVANIZED IN ACCORDANCE WITH ASTM A 123.
6. INSERTS TO BE POSITIONED TO AVOID INTERFERENCE WITH PRESTRESSING STRANDS.
7. ALL STEEL TO BE GALVANIZED IN ACCORDANCE WITH ASTM A 123.
8. ALL STEEL TO BE ASTM A709 GRADE 345.
9. STEEL TO STEEL CONNECTIONS TO BE MADE USING 7/8" GALVANIZED HIGH-STRENGTH BOLTS.
10. STEEL TO CONCRETE CONNECTIONS TO BE MADE USING ASTM A307 GRADE A BOLTS.
11. WASHERS TO BE ASTM F436. ALL BOLTS, NUTS, AND WASHERS TO BE GALVANIZED IN ACCORDANCE WITH ASTM A 123.
12. DETAILS ON THE DRAWINGS LABELED AS "NOT TO SCALE" ARE INTENTIONALLY DRAWN NOT TO SCALE FOR VISUAL CLARITY. ALL OTHER DETAILS, FOR WHICH NO SCALE IS SHOWN, ARE DRAWN PROPORTIONAL AND ARE FULLY DIMENSIONED. 7/8" GALVANIZED HIGH-STRENGTH BOLTS. 7/8" DIA. H.S. BOLTS TO BE CAST IN THE PRECAST BEAMS. THE 7/8" DIA. H.S. THREADED INSERTS TO PROVIDE A MINIMUM ULTIMATE TENSILE CAPACITY OF 11 kips IN 7.5 ksi CONCRETE.

UBT INTERMEDIATE DIAPHRAGM SIZING TABLE

BEAM TYPE	CROSS FRAME	CHANNEL SIZE
UBT42	TYPE I	MC 18 x 42.7
UBT50	TYPE I	MC 18 x 42.7
UBT58	TYPE I	MC 18 x 42.7
UBT66	TYPE II	N/A
UBT74	TYPE II	N/A
UBT82	TYPE II	N/A
UBT90	TYPE II	N/A
UBT98	TYPE II	N/A

REVISIONS

NO.	DATE	APPR.	REMARKS

DRAFT – NOT RELEASED FOR CONSTRUCTION

UTAH DEPARTMENT OF TRANSPORTATION
STANDARD DRAWINGS FOR ROAD AND BRIDGE CONSTRUCTION
SALT LAKE CITY, UTAH

RECOMMENDED FOR APPROVAL — DATE
CHAIRMAN STANDARDS COMMITTEE APPROVED — DATE
DEPUTY DIRECTOR

BULB TEE DIAPHRAGM DETAILS

STD. DWG. NO.
BT – 4

$$filess

$$date$$

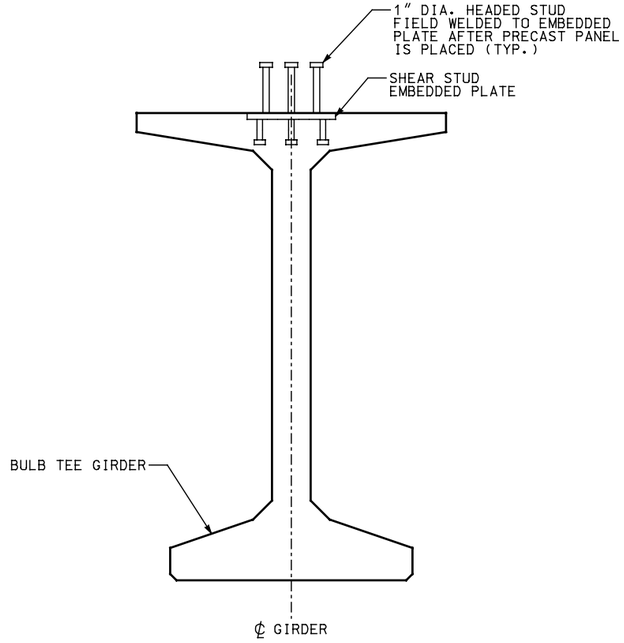

EXTERIOR BEAM AT DIAPHRAGM

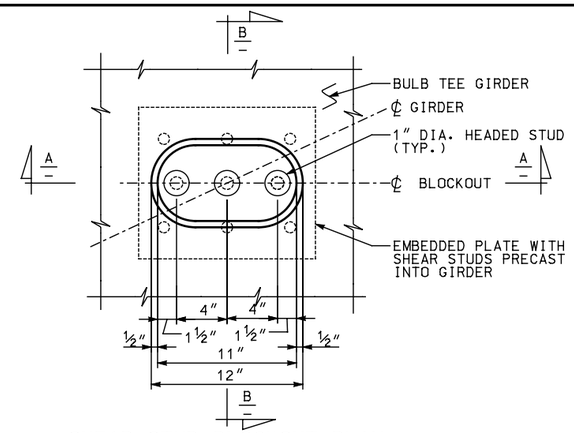

SHEAR STUD BLOCKOUT PLAN
IN PRECAST SLAB

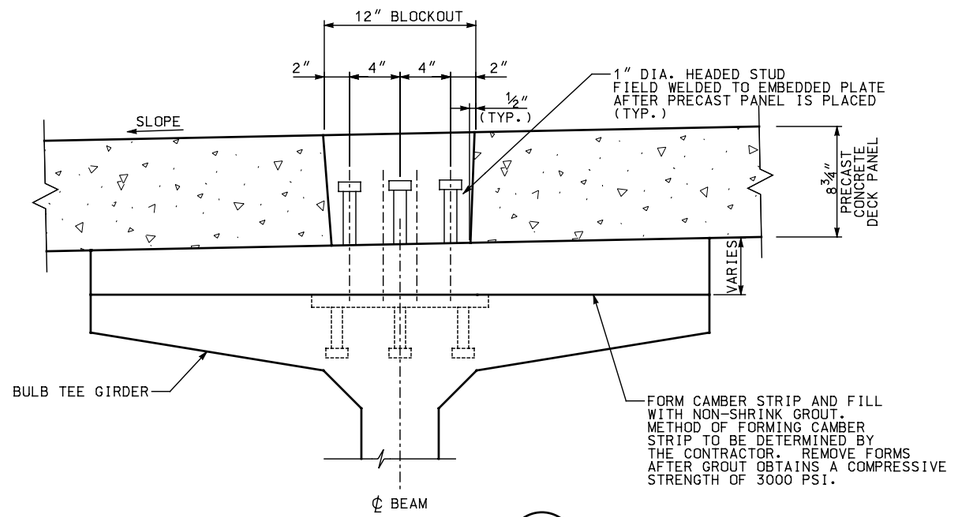

WELDED STUD SECTION A/–

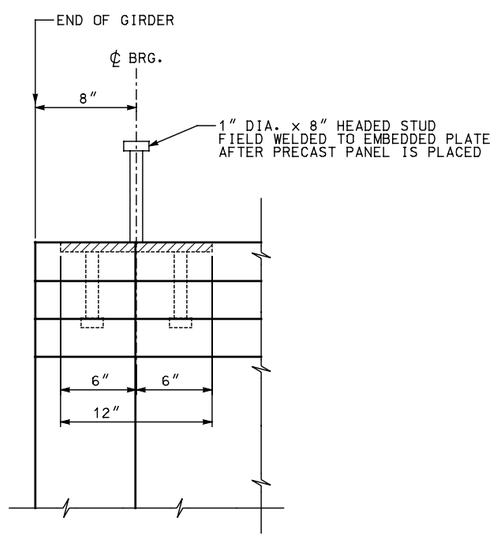

SHEAR STUD EMBEDDED PLATE
DETAIL AT ℄ BEARING

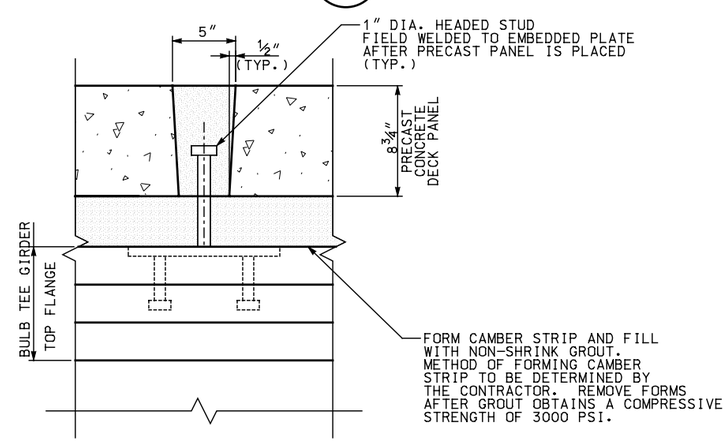

WELDED STUD SECTION B/–

REVISIONS

NO.	DATE	APPR.	REMARKS

DRAFT – NOT RELEASED FOR CONSTRUCTION

UTAH DEPARTMENT OF TRANSPORTATION
STANDARD DRAWINGS FOR ROAD AND BRIDGE CONSTRUCTION
SALT LAKE CITY, UTAH

RECOMMENDED FOR APPROVAL — DATE
CHAIRMAN STANDARDS COMMITTEE APPROVED — DATE
DEPUTY DIRECTOR

PRECAST DECKS ON BULB TEE GIRDER
WELDED STUD OPTION

STD. DWG. NO.
BT – 5

$$date$$ $$file$$

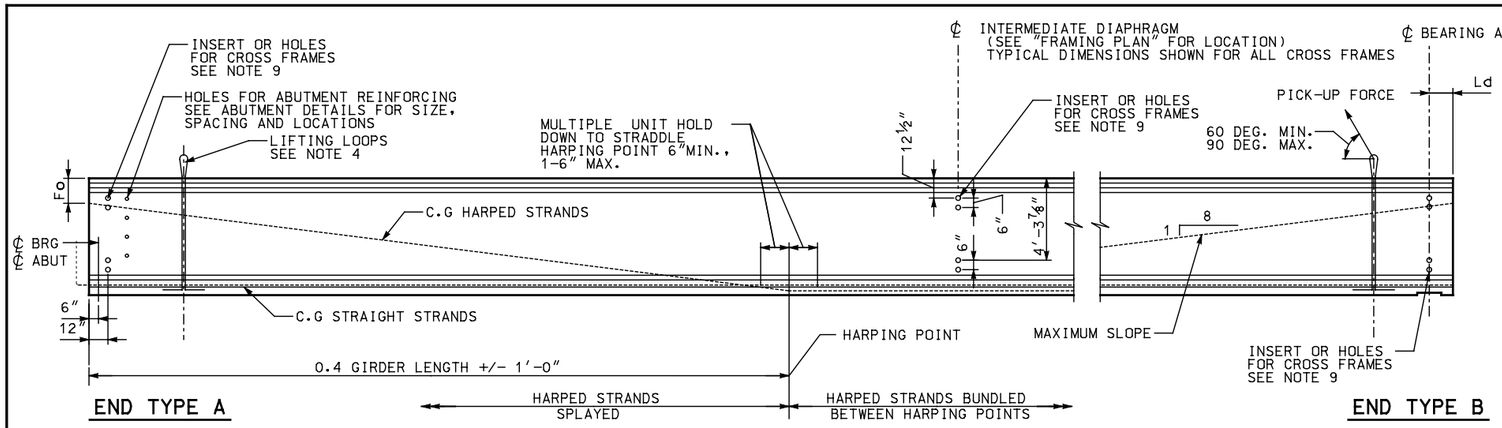

GIRDER ELEVATION

NOTES

1. INCREASE PANEL LENGTH AS NECESSARY TO COMPENSATE FOR SHORTENING DUE TO PRESTRESS AND SHRINKAGE.
2. ALL PRETENSIONED AND TEMPORARY STRANDS TO BE [0.6" DIA.] LOW RELAXATION STRANDS (AASHTO M203 GRADE 270.)
3. FOR END TYPE 'A' CUT ALL STRANDS FLUSH WITH THE GIRDER ENDS AND PAINT WITH AN APPROVED EPOXY RESIN, EXCEPT FOR EXTENDED STRANDS AS SHOWN. FOR END TYPE 'B' CUT ALL STRANDS 1" BELOW CONCRETE SURFACE AND GROUT WITH AN APPROVED EPOXY GROUT.
4. DESIGN AND INSTALL LIFTING EMBEDMENTS IN ACCORDANCE WITH THE STANDARD SPECIFICATIONS.
5. CAUTION TO BE EXERCISED IN HANDLING AND PLACING GIRDERS. ALL GIRDERS TO BE CHECKED BY THE CONTRACTOR TO ENSURE THAT THEY ARE BRACED ADEQUATELY TO PREVENT TIPPING AND TO CONTROL LATERAL BENDING DURING SHIPPING. ONCE ERECTED, ALL GIRDERS TO BE BRACED LATERALLY TO PREVENT TIPPING UNTIL THE DIAPHRAGMS HAVE BEEN INSTALLED.
6. FORMS FOR BEARING PAD RECESSES TO BE CONSTRUCTED AND FASTENED IN SUCH A MANNER AS TO NOT CAUSE DAMAGE TO THE GIRDER DURING THE STRAND RELEASE OPERATION.
7. FOR DIAPHRAGM NOTES SEE SHEET BT-4.
8. STIRRUP SPACING TO BE DETERMINED BY THE ENGINEER.
9. USE HOLES FOR INTERIOR GIRDERS AND PLACE INSERTS ON THE INTERIOR FACE OF EXTERIOR GIRDERS. PLACE HOLES AND INSERTS PERPENDICULAR TO GIRDER. INSERTS TO BE 1" DIA. BURKE HI-TENSILE, LANCASTER MALLEABLE, DAYTON-SUPERIOR F-62 FLARED THIN SLAB (1" x 4⅝") FERRULE INSERT OR APPROVED EQUAL (TYP.). SEE CROSS FRAME DETAILS FOR LOCATIONS.

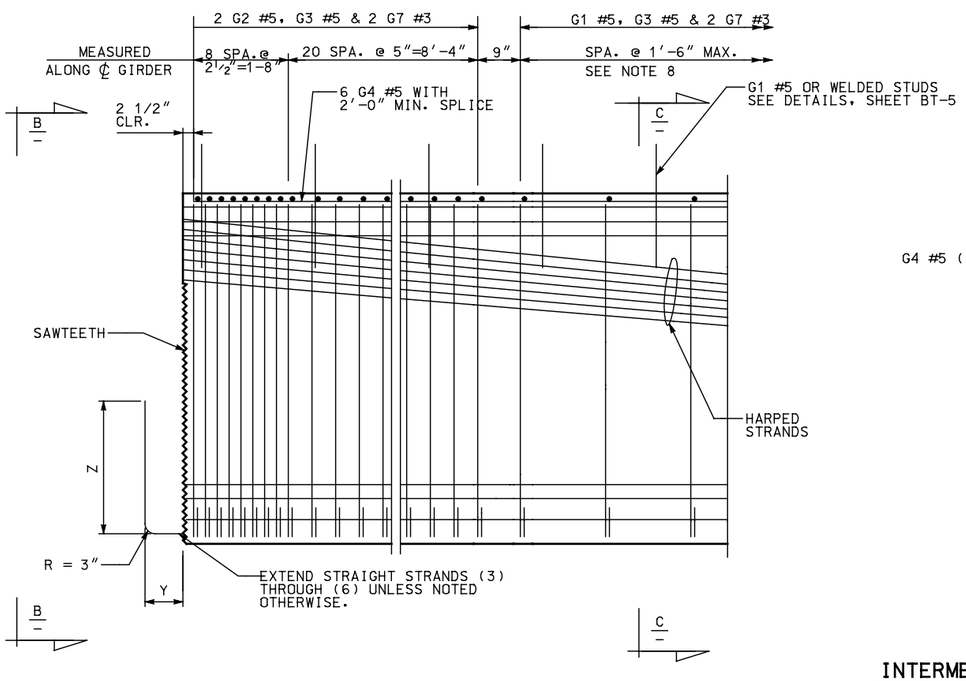

2 TYPICAL END ELEVATION

END TYPE A SHOWN, TYPE B SIMILAR

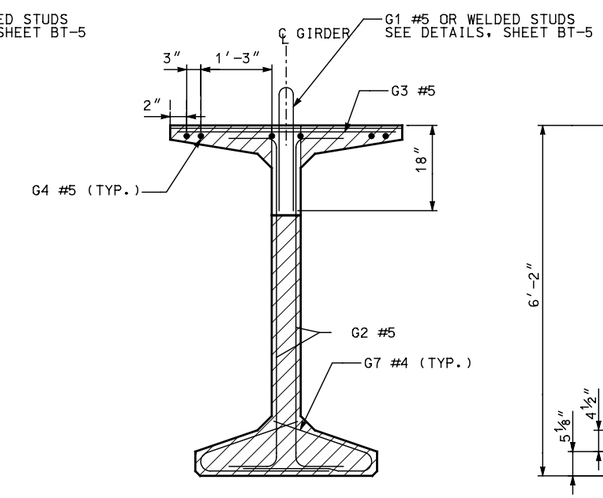

3 VIEW B

SAWTEETH SHOWN BY HATCHED AREA

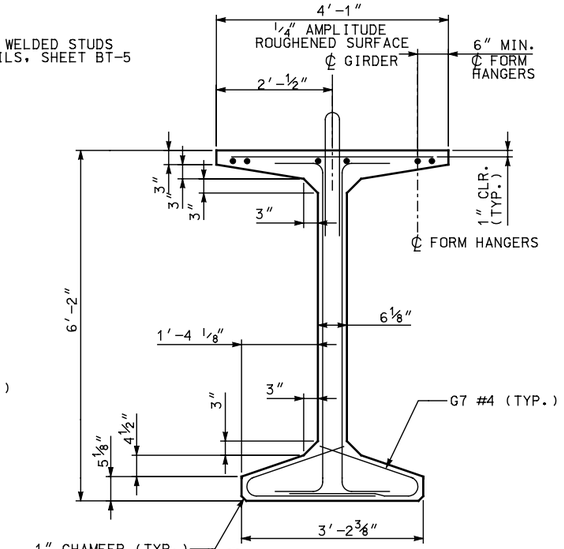

4 SECTION C

INTERMEDIATE DIAPHRAGM

1/5 POINTS OF SPAN FOR SPAN LENGTHS GREATER THAN 160'-0"
1/4 POINTS OF SPAN FOR SPAN LENGTHS 120'-0" TO 160'-0"
1/3 POINTS OF SPAN FOR SPAN LENGTHS 80'-0" TO 120'-0"
1/2 POINTS OF SPAN FOR SPAN LENGTHS LESS THAN 80'-0".

DIAPHRAGM TYPE	END TYPE	BEARING RECESS	Y	Z	SAWTEETH
INTEGRAL ABUTMENT	A	NO	8"	28"	YES
CANTILEVER ABUTMENT	B	YES	0"	0"	NO

MARK	LOCATION	SIZE	BENDING DIAGRAM (ALL DIMENSIONS ARE OUT TO OUT)
G1	GIRDER STIRRUPS	5	NOTE: FOR DIMENSION "A", SEE "GIRDER SCHEDULE"
G2	GIRDER END STIRRUPS	5	
G3	GIRDER TOP FLANGE	5 STR.	
G4	GIRDER LONGIT. FULL LENGTH	5 STR.	
G7	GIRDER BOT. FLANGE TIES	4	

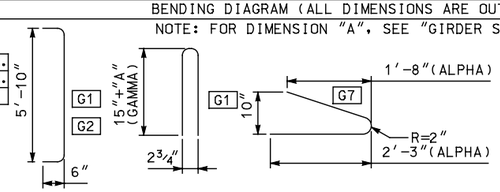

(ALPHA) - VARIES FOR SKEWED ENDS
(GAMMA) - SHALL BE CHECKED FOR EFFECT OF VERTICAL CURVE.

REVISIONS

NO.	DATE	APPR.	REMARKS

DRAFT - NOT RELEASED FOR CONSTRUCTION

UTAH DEPARTMENT OF TRANSPORTATION
STANDARD DRAWINGS FOR ROAD AND BRIDGE CONSTRUCTION
SALT LAKE CITY, UTAH

RECOMMENDED FOR APPROVAL — DATE
CHAIRMAN STANDARDS COMMITTEE APPROVED — DATE
DEPUTY DIRECTOR

PRETENSIONED BULB TEE GIRDER UBT74
GIRDER DETAILS 1

STD. DWG. NO.
UBT74-1

$$files$$
$$date$$

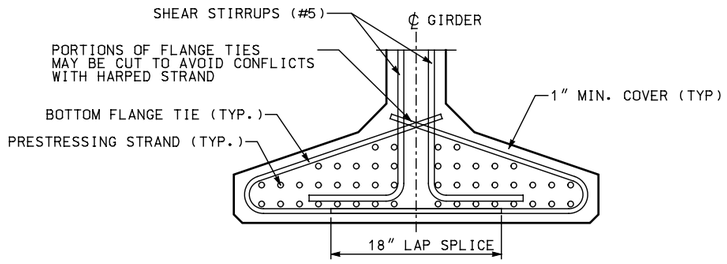

8 BOTTOM FLANGE REINFORCING

GIRDER END SHOWN, MIDDLE SECTION SIMILAR

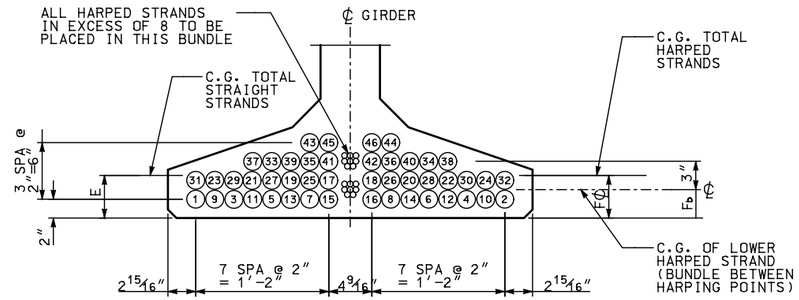

6 STRAND PATTERN AT ℄ SPAN

STRAIGHT STRAND LOCATION SEQUENCE TO BE AS SHOWN (1), (2) ETC.

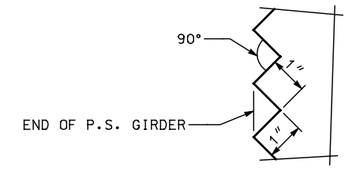

7 SAWTOOTH DETAILS

SAWTEETH ARE FULL WIDTH – USE SAWTOOTH KEYS FROM BOTTOM OF BOTTOM FLANGE TO BOTTOM OF LOWEST HARPED STRAND AS WELL AS TOP FLANGE ADJACENT TO HARPED STRANDS AS SHOWN IN VIEW B – SEE SHEET UBT74-1

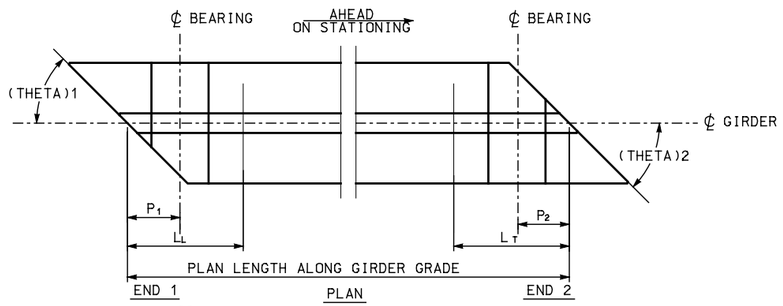

9 SKEWED END DETAILS

NOTE:
LL AND LT ARE SHIPPING SUPPORT LOCATIONS AT LEADING AND TRAILING ENDS, RESPECTIVELY

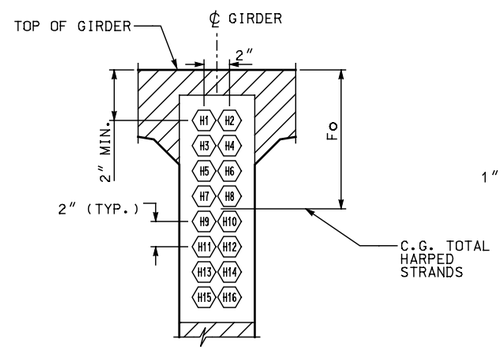

STRAND PATTERN AT GIRDER END

HARPED STRAND LOCATION SEQUENCE TO BE AS SHOWN (1), (2) ETC.

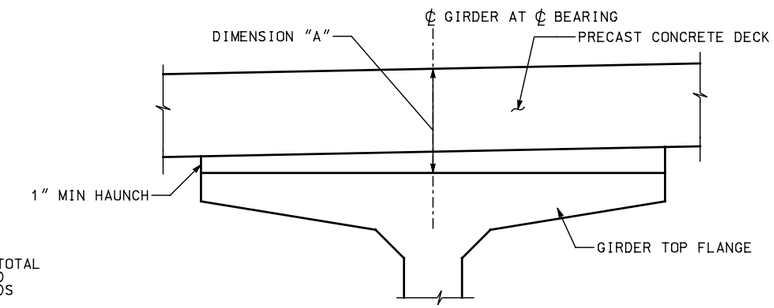

12 DECK ELEVATION AT GIRDER ENDS

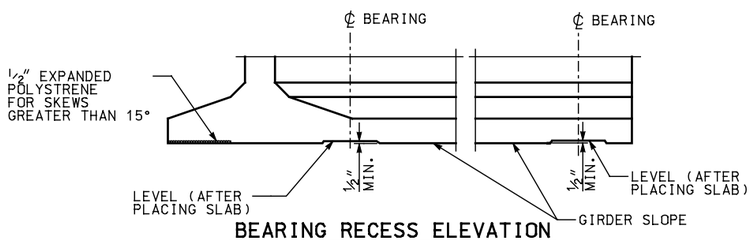

BEARING RECESS ELEVATION

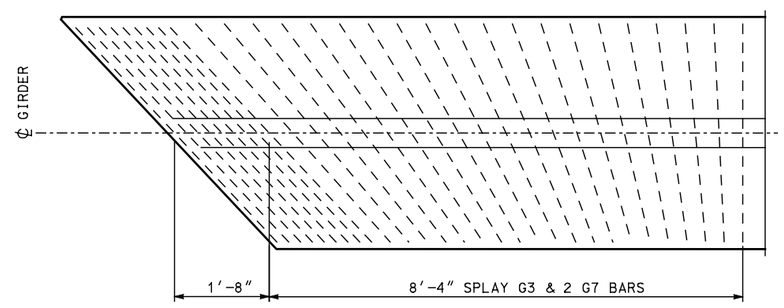

11 TRANSVERSE REINFORCING SKEWED ENDS

ONLY TRANSVERSE REINF. SHOWN

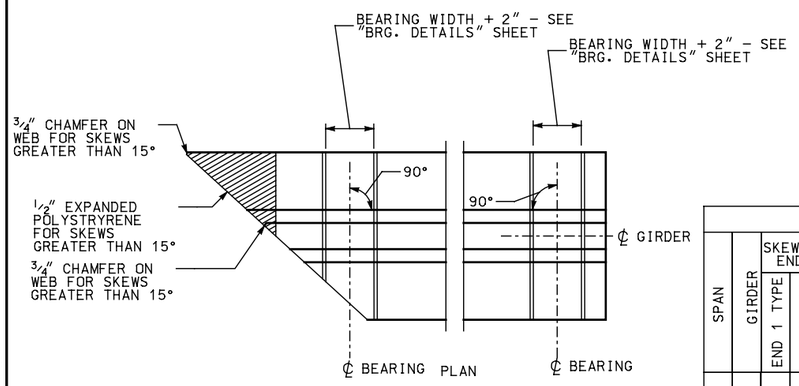

10 BEARING RECESS AND BOTTOM FLANGE SPALL PROTECTION DETAIL

GIRDER SCHEDULE

DIMENSION "A" AT CENTER LINE BEARINGS = BASED ON GIRDER DEFLECTION = "D" AT TIME OF SLAB PLACEMENT (120 DAYS)

SPAN	GIRDER	SKEWED END END 1 TYPE	SKEWED END END 2 TYPE	SHEAR CONN. TYPE W = WELDED STUD R = REINFORCING	L⊢ (9)	L+ (9)	(THETA) 1 (DEG.) (9)	(THETA) 2 (DEG.) (9)	P_1 (9)	P_2 (9)	PLAN LENGTH (ALONG GIRDER GRADE)	MIN. CONC. COMPR. STRENGTH @ FINAL F'C KSI	MIN. CONC. COMPR. STRENGTH @ RELEASE F'CI KSI	HARPED NO. OF STRANDS	HARPED JACKING FORCE (KIPS)	STRAIGHT NO. OF STRANDS	STRAIGHT JACKING FORCE (KIPS)	LOCATION OF C.G. STRANDS E (6)	LOCATION OF C.G. STRANDS F℄ (6)	LOCATION OF C.G. STRANDS Fb (6)	LOCATION OF C.G. STRANDS Fo (5)	C	D @ 40 DAYS	D @ 120 DAYS	Ld
-	-	-	-	-	-	-	-	-	-	-	-	-	-	-	-	-	-	-	-	-	-	-	-	-	-
-	-	-	-	-	-	-	-	-	-	-	-	-	-	-	-	-	-	-	-	-	-	-	-	-	-

NOTES: SHOW DIMENSIONS US CUSTOMARY UNITS TO THE NEAREST 1/8 TH INCH
THE NUMBER OF HARPED STRANDS SHOULD NOT EXCEED 1/2 OF NUMBER OF STRAIGHT STRANDS

DRAFT – NOT RELEASED FOR CONSTRUCTION

REVISIONS

NO.	DATE	APPR.	REMARKS

UTAH DEPARTMENT OF TRANSPORTATION
STANDARD DRAWINGS FOR ROAD AND BRIDGE CONSTRUCTION
SALT LAKE CITY, UTAH

RECOMMENDED FOR APPROVAL — DATE
CHAIRMAN STANDARDS COMMITTEE APPROVED — DATE
DEPUTY DIRECTOR

PRETENSIONED BULB TEE GIRDER UBT74
GIRDER DETAILS 2 AND DESIGN WORKSHEET

STD. DWG. NO.
UBT74 – 2

$$file$$
$$date$$

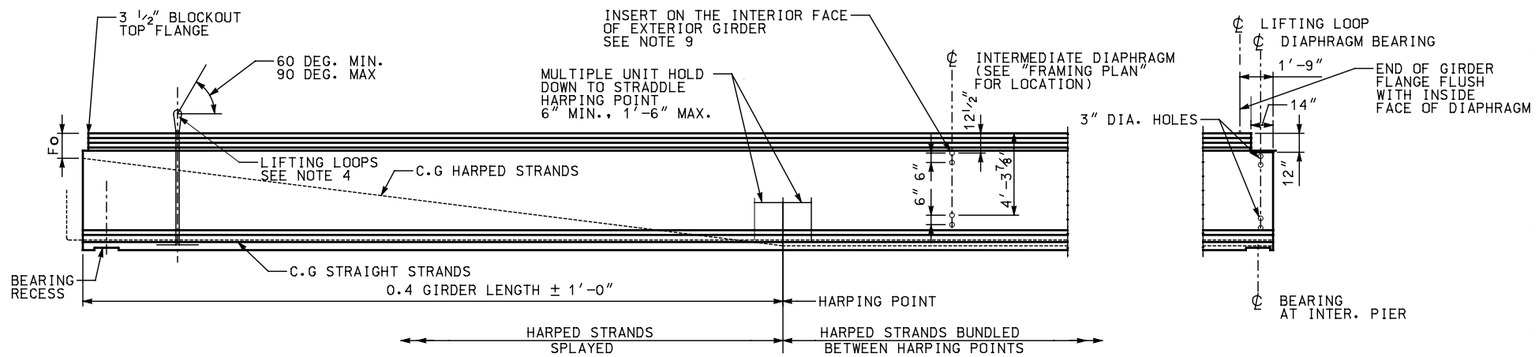

END TYPE A

1 GIRDER ELEVATION

NOTES

1. INCREASE PANEL LENGTH AS NECESSARY TO COMPENSATE FOR SHORTENING DUE TO PRESTRESS AND SHRINKAGE.
2. ALL PRETENSIONED AND TEMPORARY STRANDS TO BE [0.6" DIA.] LOW RELAXATION STRANDS (AASHTO M203 GRADE 270.)
3. FOR END TYPE "A" CUT ALL STRANDS FLUSH WITH THE GIRDER ENDS AND PAINT WITH AN APPROVED EPOXY RESIN, EXCEPT FOR EXTENDED STRANDS AS SHOWN. FOR END TYPE "B" CUT ALL STRANDS 1" BELOW CONCRETE SURFACE AND GROUT WITH AN APPROVED EPOXY GROUT.
4. DESIGN AND INSTALL LIFTING EMBEDMENTS IN ACCORDANCE WITH THE STANDARD SPECIFICATIONS.
5. CAUTION TO BE EXERCISED IN HANDLING AND PLACING GIRDERS. ALL GIRDERS TO BE CHECKED BY THE CONTRACTOR TO ENSURE THAT THEY ARE BRACED ADEQUATELY TO PREVENT TIPPING AND TO CONTROL LATERAL BENDING DURING SHIPPING. ONCE ERECTED, ALL GIRDERS TO BE BRACED LATERALLY TO PREVENT TIPPING UNTIL THE DIAPHRAGMS HAVE BEEN INSTALLED.
6. FORMS FOR BEARING PAD RECESSES TO BE CONSTRUCTED AND FASTENED IN SUCH A MANNER AS TO NOT CAUSE DAMAGE TO THE GIRDER DURING THE STRAND RELEASE OPERATION.
7. FOR DIAPHRAGM NOTES SEE SHEET BT-4.
8. STIRRUP SPACING TO BE DETERMINED BY THE ENGINEER.
9. USE HOLES FOR INTERIOR GIRDERS AND PLACE INSERTS ON THE INTERIOR FACE OF EXTERIOR GIRDERS. PLACE HOLES AND INSERTS PERPENDICULAR TO GIRDER. INSERTS SHALL BE 1" DIA. BURKE HI-TENSILE, LANCASTER MALLEABLE, DAYTON-SUPERIOR F-62 FLARED THIN SLAB (1" × 4 5/8") FERRULE INSERT OR APPROVED EQUAL (TYP.). SEE CROSS FRAME DETAILS FOR LOCATIONS.
10. ALL DETAILS SHOWN PERTAIN ONLY TO THE 74" DEEP GIRDER WITH THE 6'-0" TOP FLANGE WIDTH SHOWN.
11. FIELD BENDING REQUIRED TO OBTAIN 1 1/2" CONCRETE COVER AT PAVEMENT SEAT.

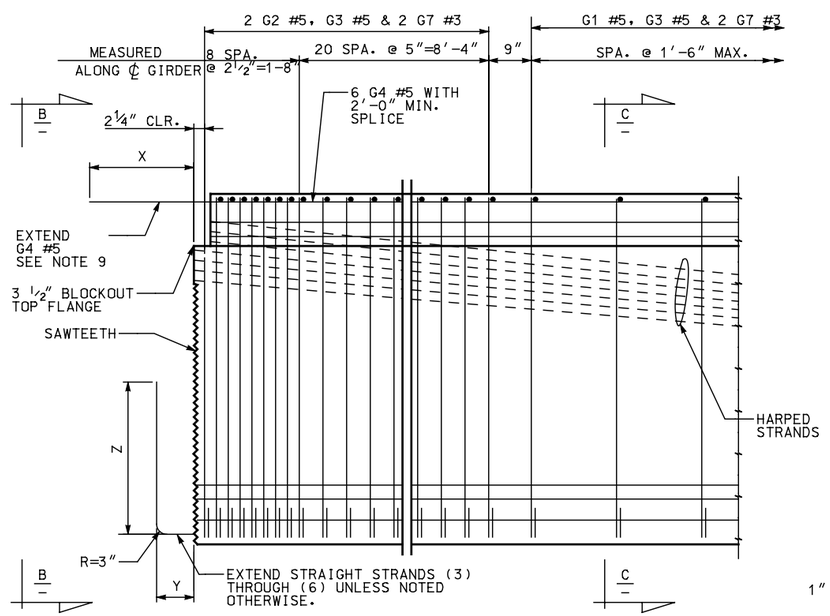

2 TYPICAL END ELEVATION

END TYPE "A" SHOWN, TYPE "B" SIMILAR

* FIELD BENDING REQUIRED TO OBTAIN 1 1/2" CONCRETE COVER AT PAVEMENT SEAT

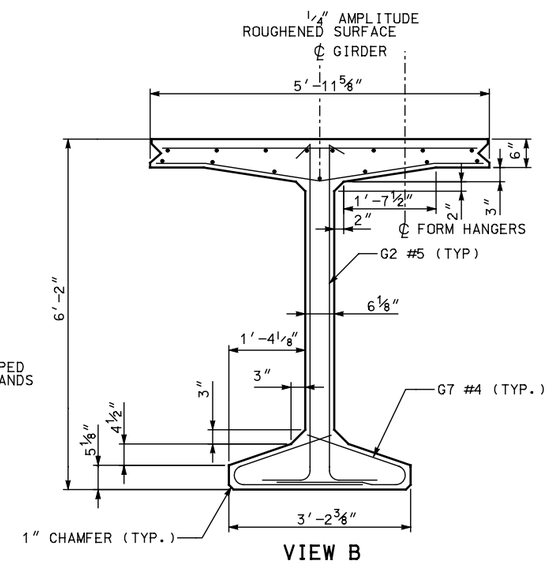

VIEW B

SAWTEETH SHOWN BY HATCHED AREA

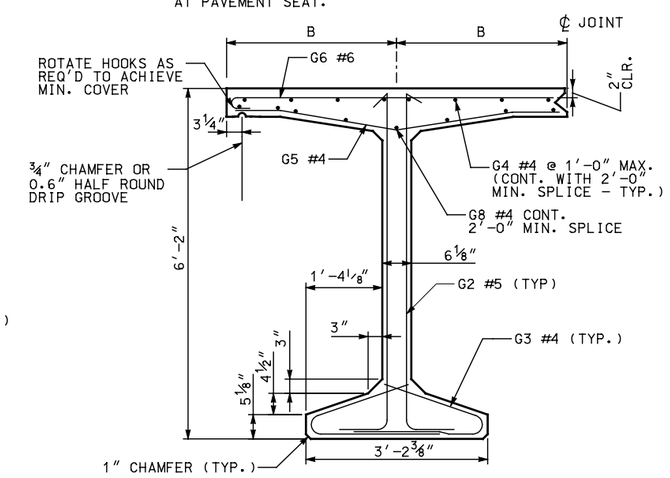

SECTION C

FOR DETAILS NOT SHOWN, SEE INTERIOR GIRDER

INTERMEDIATE DIAPHRAGM

1/2 POINTS OF SPAN FOR SPAN LENGTHS 40'-0" TO 80'-0".

DIAPHRAGM TYPE	END TYPE	BEARING RECESS	X	Y	Z	SAWTEETH
INTEGRAL ABUTMENT	A	NO	1'-10"	8"	28"	YES
CANTILEVER ABUTMENT	B	YES	0"	0"	0"	NO

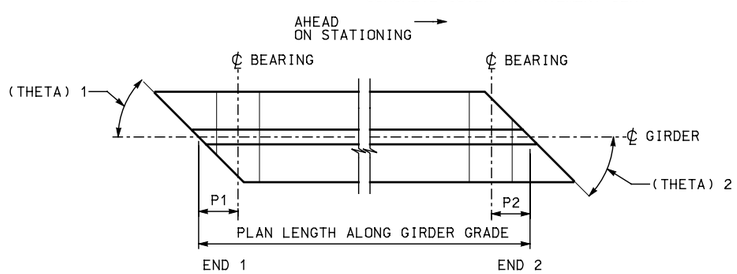

3 SKEWED END DETAILS

MARK	LOCATION	SIZE	BENDING DIAGRAM (ALL DIMENSIONS ARE OUT TO OUT)
G1	GIRDER STIRRUPS	5	
G2	GIRDER END STIRRUPS	5	
G3	BOTTOM FLANGE	4	
G4	TOP OF TOP FLANGE - LONGIT.	4	STR.
G5	BOT. OF TOP FLANGE - TRANSV.	4	
G6	TOP TRANSV. - EXT. GIRDER	4	
G7	TOP TRANSV. - INT. GIRDER	6	STR.
G8	BOT. OF TOP FLANGE - LONGIT.	4	STR.

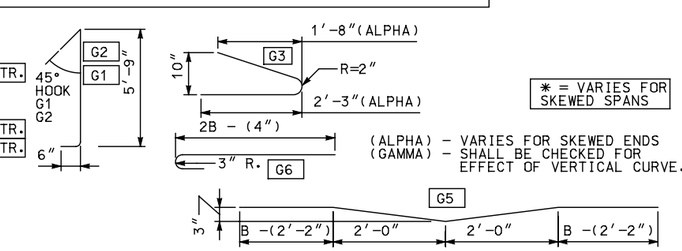

* = VARIES FOR SKEWED SPANS

(ALPHA) - VARIES FOR SKEWED ENDS
(GAMMA) - SHALL BE CHECKED FOR EFFECT OF VERTICAL CURVE.

REVISIONS

NO.	DATE	APPR.	REMARKS

DRAFT - NOT RELEASED FOR CONSTRUCTION

UTAH DEPARTMENT OF TRANSPORTATION
STANDARD DRAWINGS FOR ROAD AND BRIDGE CONSTRUCTION
SALT LAKE CITY, UTAH

RECOMMENDED FOR APPROVAL — DATE
CHAIRMAN STANDARDS COMMITTEE APPROVED — DATE
DEPUTY DIRECTOR

PRETENSIONED DECK BULB TEE GIRDER UDBT-74
GIRDER DETAILS 1

STD. DWG. NO.
UDBT74 - 1

$$files$$
$$dates$$

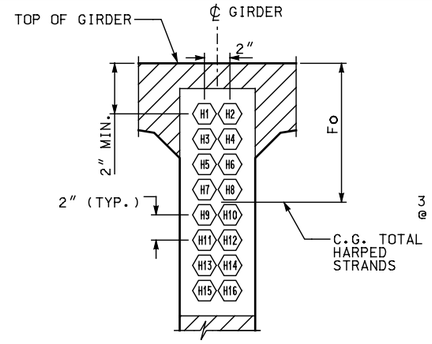

(5) STRAND PATTERN AT GIRDER END

HARPED STRAND LOCATION SEQUENCE TO BE AS SHOWN (1), (2) ETC.

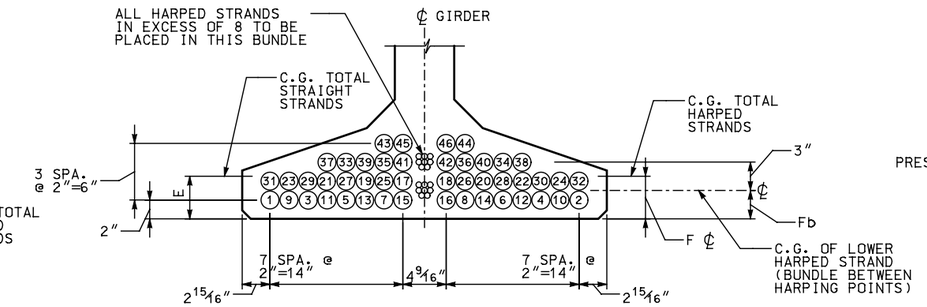

(6) STRAND PATTERN AT ℄ SPAN

STRAIGHT STRAND LOCATION SEQUENCE TO BE AS SHOWN (1), (2) ETC.

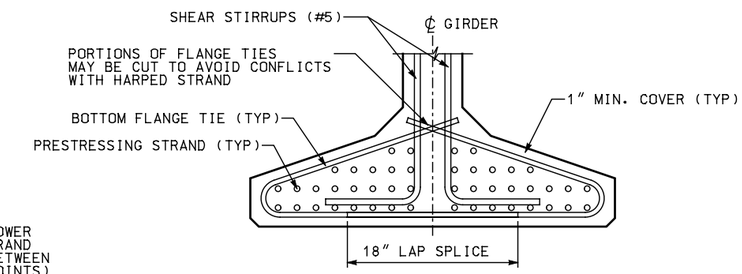

(11) BOTTOM FLANGE REINFORCING

GIRDER END SHOWN, MIDDLE SECTION SIMILAR

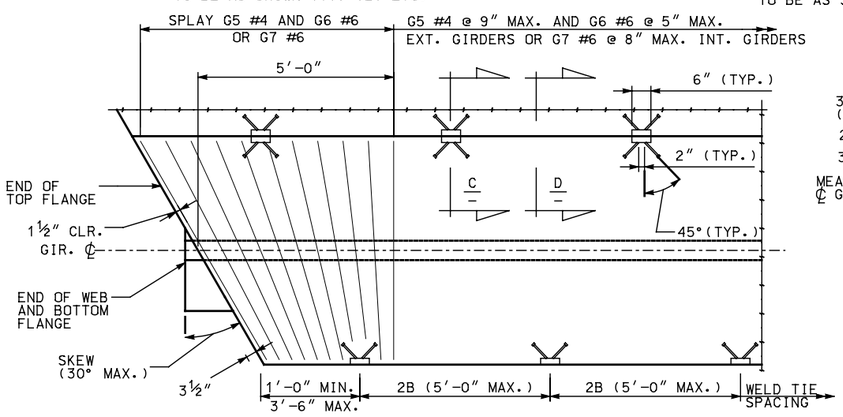

GIRDER PLAN

OMIT WELD TIES ON EXTERIOR EDGE OF EXTERIOR GIRDER. (STRANDS AND LONGITUDINAL BARS NOT SHOWN

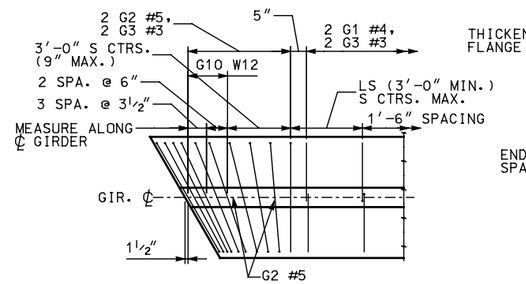

(4) PLAN SECTION THROUGH GIRDER WEB

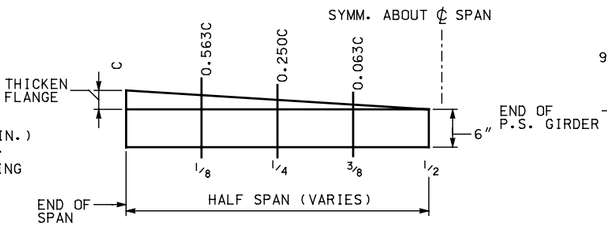

GIRDER FLANGE THICKENING **

** THICKEN FLANGE TO COMPENSATE FOR CAMBER DUE TO PRESTRESS. FLANGE THICKNESS SHOWN IS @ CENTERLINE OF SPAN. FOR FLANGE THICKNESS ALONG GIRDER SEE GIRDER FLANGE THICKENING DETAILS ON BR. SHEET GIRDERS WITH ULTIMATE CAMBER VALUES SMALLER THAN 61/64" ARE EXEMPT FROM THIS REQUIREMENT. FLANGE THICKENING SHALL BE USED ONLY IF NEEDED BY DESIGN.

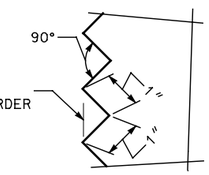

SAWTEETH DETAILS

SAWTEETH ARE FULL WIDTH USE SAWTEETH KEYS FROM BOTTOM OF BOTTOM FLANGE TO BOTTOM OF LOWEST HARPED STRAND

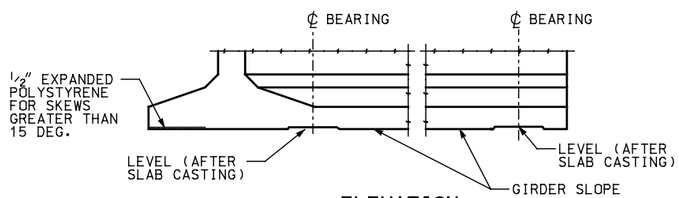

ELEVATION

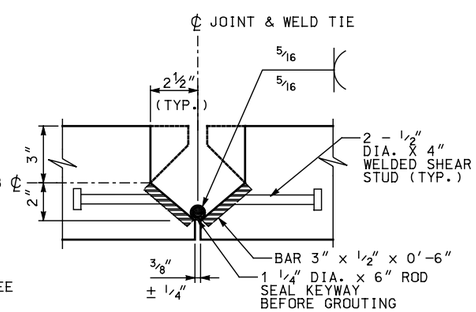

SECTION C

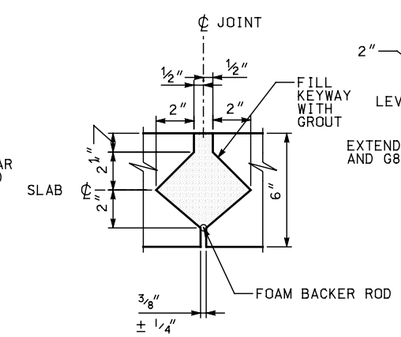

SECTION D

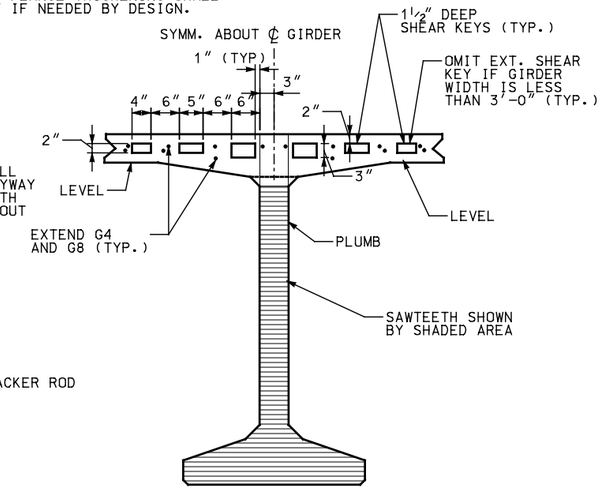

GIRDER END

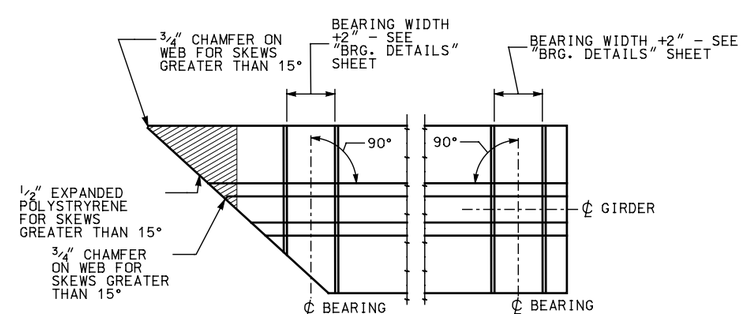

PLAN

(10) BEARING RECESS AND BOTTOM FLANGE SPALL PROTECTION DETAIL

* THE NUMBER OF HARPED STRANDS SHOULD NOT EXCEED 1/2 OF THE NUMBER OF STRAIGHT STRANDS.

NOTE: DIMENSIONS SHALL BE SHOWN IN IMPERIAL UNITS TO THE NEAREST 1/8 INCH.

GIRDER SCHEDULE

SPAN	GIRDER	END 1 (3)	END 2 (3)	S (4)	LS (4)	*1 (3)	*2 (3)	P1 (3)	P2 (3)	PLAN LENGTH (ALONG GIRDER GRADE)	MIN. CONC. COMPR. STRENGTH @ FINAL F'C KSI	MIN. CONC. COMPR. STRENGTH @ RELEASE F'CI KSI	HARPED NO. OF STRANDS	HARPED JACKING FORCE (KIPS)	STRAIGHT NO. OF STRANDS	STRAIGHT JACKING FORCE (KIPS)	LOCATION OF C.G. STRANDS (1)(2) E	LOCATION OF C.G. STRANDS (1)(2) FC L	LOCATION OF C.G. STRANDS (2) Fb	LOCATION OF C.G. STRANDS (5) Fo	CAMBER RELEASE △	CAMBER 30 △	CAMBER 2000 △
-	-	-	-	-		-	-	-	-		-	-	-	-	-	-	-	-	-	-	-	-	-

REVISIONS					
NO.	DATE	APPR.	REMARKS		

DRAFT - NOT RELEASED FOR CONSTRUCTION

UTAH DEPARTMENT OF TRANSPORTATION
STANDARD DRAWINGS FOR ROAD AND BRIDGE CONSTRUCTION
SALT LAKE CITY, UTAH

RECOMMENDED FOR APPROVAL — DATE
CHAIRMAN STANDARDS COMMITTEE APPROVED — DATE
DEPUTY DIRECTOR

PRETENSIONED DECK BULB TEE
GIRDER UDBT-74
GIRDER DETAILS 2
AND DESIGN WORKSHEET

STD. DWG. NO.
UDBT74 - 2

$$filo$$
$$dcset$$

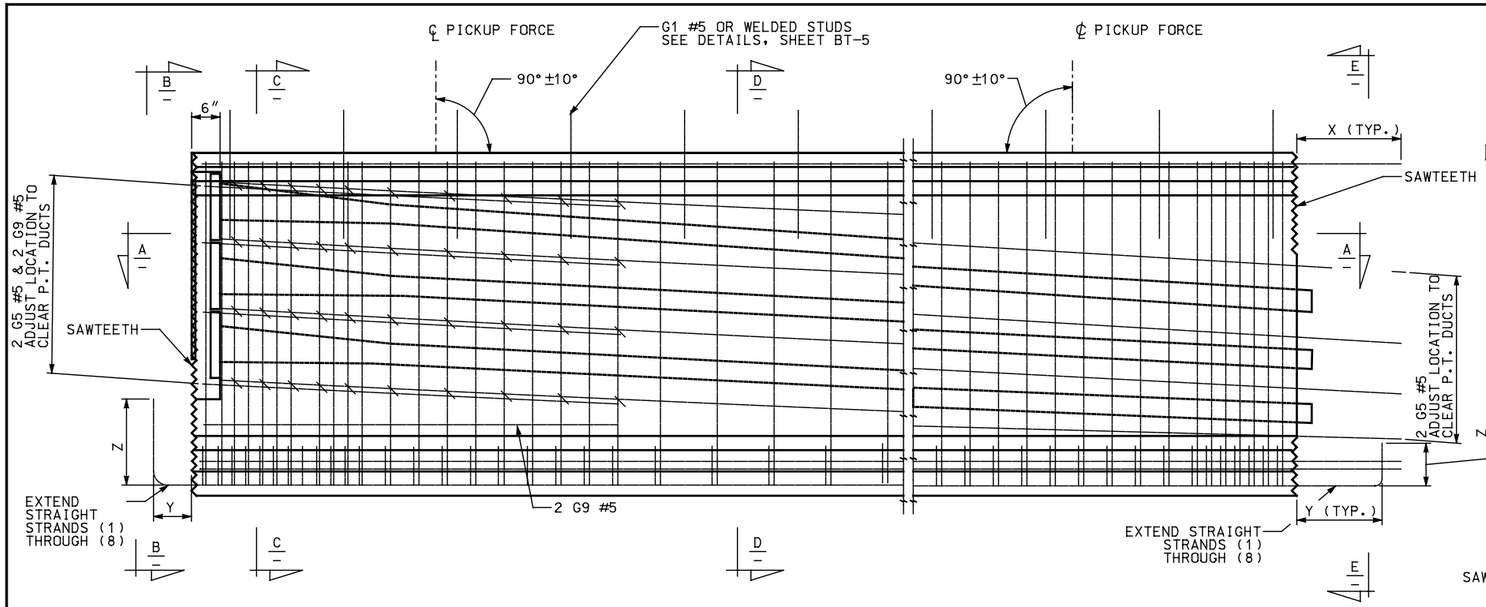

1 TYPICAL ELEVATION AT END SEGMENT

END TYPE A SHOWN, OTHER END TYPES SIMILAR

2 TYPICAL END ELEVATION AT CLOSURE

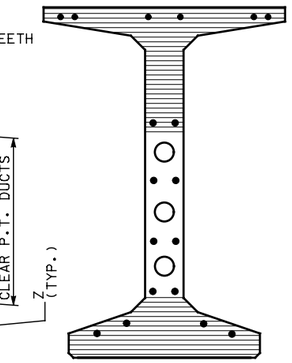

VIEW E

SAWTEETH SHOWN BY HATCHED AREA

PRE-TENSIONING NOTES

1. INCREASE PANEL LENGTH AS NECESSARY TO COMPENSATE FOR SHORTENING DUE TO PRESTRESS AND SHRINKAGE.
2. ALL PRETENSIONED AND TEMPORARY STRANDS TO BE [0.6″ DIA.] LOW RELAXATION STRANDS (AASHTO M203 GRADE 270.)
3. FOR END TYPE 'A' AND 'C' CUT ALL STRANDS FLUSH WITH THE GIRDER ENDS AND PAINT WITH AN APPROVED EPOXY RESIN, EXCEPT FOR EXTENDED STRANDS AS SHOWN. FOR END TYPE 'B' CUT ALL STRANDS 1″ BELOW CONCRETE SURFACE AND GROUT WITH AN APPROVED EPOXY GROUT.
4. DESIGN AND INSTALL LIFTING EMBEDMENTS IN ACCORDANCE WITH THE STANDARD SPECIFICATIONS.
5. CAUTION TO BE EXERCISED IN HANDLING AND PLACING GIRDERS. ALL GIRDERS TO BE CHECKED BY THE CONTRACTOR TO ENSURE THAT THEY ARE BRACED ADEQUATELY TO PREVENT TIPPING AND TO CONTROL LATERAL BENDING DURING SHIPPING. ONCE ERECTED, ALL GIRDERS TO BE BRACED LATERALLY TO PREVENT TIPPING UNTIL THE DIAPHRAGMS HAVE BEEN INSTALLED.
6. FORMS FOR BEARING PAD RECESSES TO BE CONSTRUCTED AND FASTENED IN SUCH A MANNER AS TO NOT CAUSE DAMAGE TO THE GIRDER DURING THE STRAND RELEASE OPERATION.
7. FOR DIAPHRAGM NOTES SEE SHEET BT-4.
8. ROUGHEN THE TOP SURFACE OF THE GIRDER FLANGE TO AN AMPLITUDE OF ±¼″.
9. USE HOLES FOR INTERIOR GIRDERS AND PLACE INSERTS ON THE INTERIOR FACE OF EXTERIOR GIRDERS. PLACE HOLES AND INSERTS PERPENDICULAR TO GIRDER. INSERTS SHALL BE 1″ DIA. BURKE HI-TENSILE, LANCASTER MALLEABLE, DAYTON-SUPERIOR F-62 FLARED THIN SLAB (1″x4 ⅝″) FERRULE INSERT OR APPROVED EQUAL (TYP.). SEE CROSS FRAME DETAILS FOR LOCATIONS.

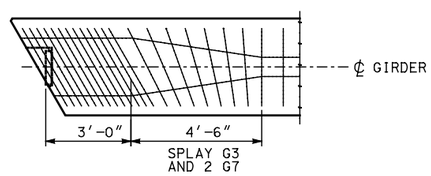

4 TRANSVERSE REINFORCING AT SKEWED ENDS

ONLY TRANSVERSE REINFORCING SHOWN

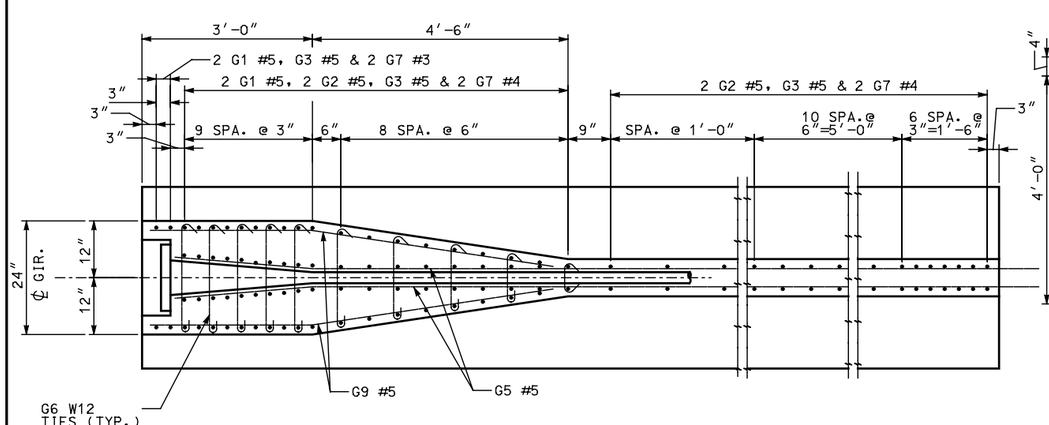

5 SECTION A

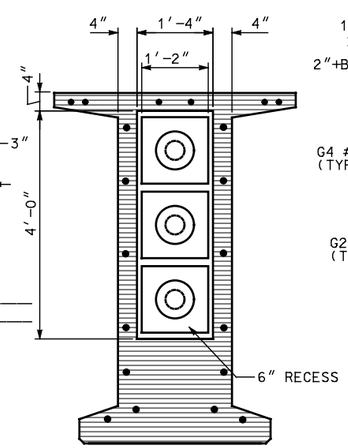

6 VIEW B

SAWTEETH SHOWN BY HATCHED AREA.

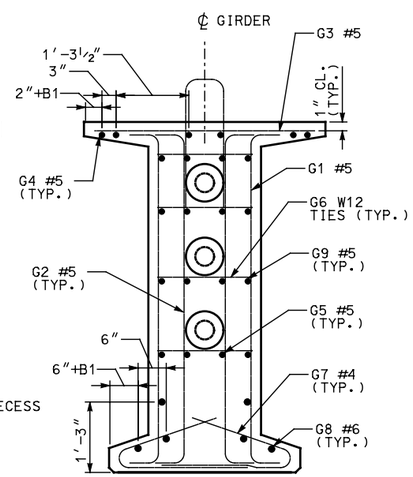

7 SECTION C

FOR "B1" SEE SHEET UBT7PT-3

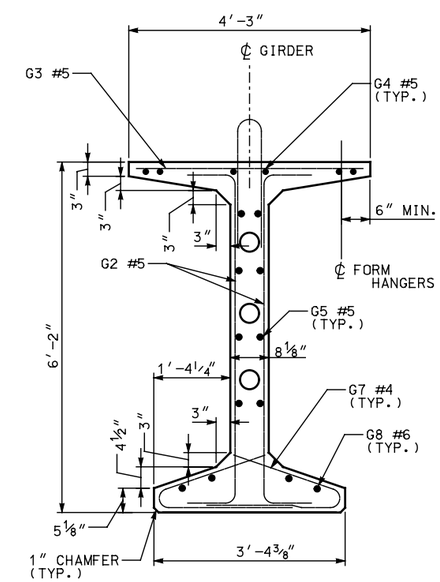

8 SECTION D

REVISIONS

NO.	DATE	APPR.	REMARKS

DRAFT – NOT RELEASED FOR CONSTRUCTION

UTAH DEPARTMENT OF TRANSPORTATION
STANDARD DRAWINGS FOR ROAD AND BRIDGE CONSTRUCTION
SALT LAKE CITY, UTAH

RECOMMENDED FOR APPROVAL — DATE

CHAIRMAN STANDARDS COMMITTEE APPROVED — DATE

DEPUTY DIRECTOR

POST-TENSIONED BULB TEE GIRDER UBT74PT-1
GIRDER DETAILS 1

STD. DWG. NO.
UBT74PT-1

$$files$$

$$date$$

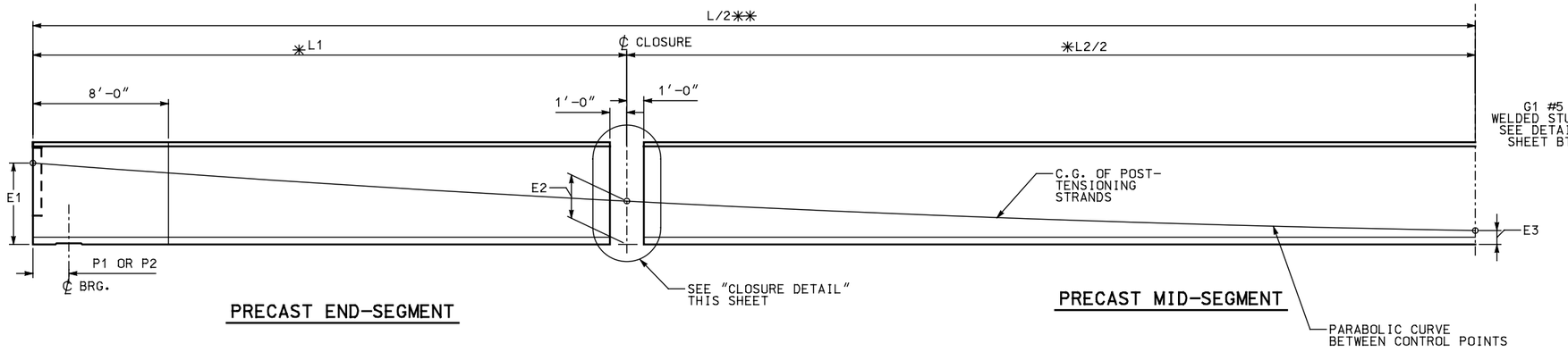

(9) PRECAST LONGITUDINAL HALF-SECTION SHOWING POST-TENSIONING CABLE PATHS

✱ MEASURED BEFORE POST-TENSIONING
✱✱ CONTRACTOR MAY ELECT TO CAST THE GIRDER IN ONE PIECE IF THE SHIPPING ROUTE ALLOWS THE SHIPMENT OF LONG GIRDERS

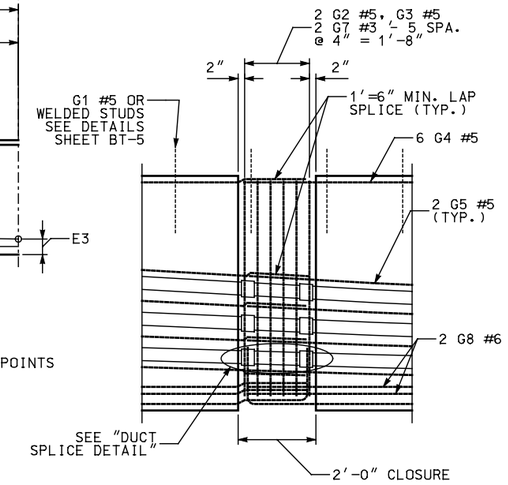

(10) CLOSURE DETAIL

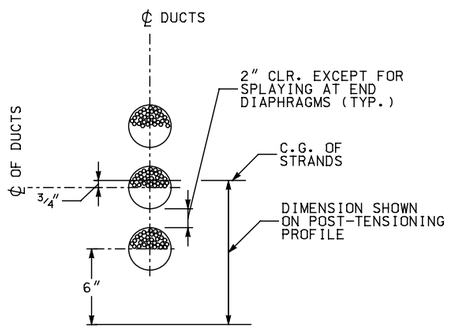

(11) TENDON IN SAG CURVE STRAND LOCATION DETAIL

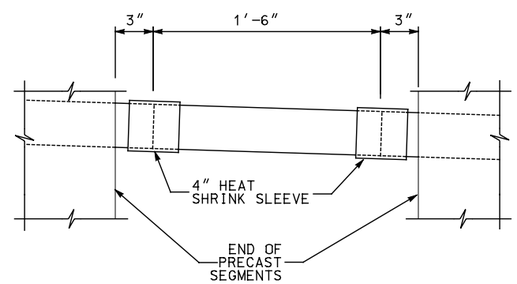

(12) DUCT SPLICE DETAIL

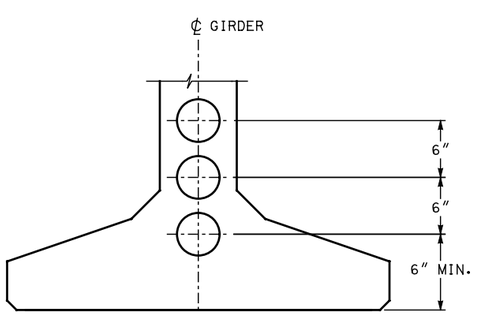

(13) POST-TENSIONING STRAND PATTERN AT CENTERLINE SPAN

POST-TENSIONING TABLE

SPAN	GIRDER	MIN. CONC. COMPRESSIVE STRENGTH (KSI)		NUMBER OF STRANDS			TOTAL PRESTRESS LOSS (KSI)	PRECAST LONGITUDINAL HALF-SECTION		
		GIRDER	CLOSURE		JACKING	AFTER SEATING		E1 (IN.) (9)	E2 (IN.) (9)	E3 (IN.) (9)

POST-TENSIONING NOTES

1. SHOW THE MINIMUM COMPRESSIVE STRENGTH OF THE CAST-IN-PLACE CONCRETE AT THE CLOSURE AT THE TIME OF POST-TENSIONING IN THE POST-TENSIONING TABLE.
2. USE DUCT WITH A MAXIMUM OUTSIDE DIAMETER OF THE DUCT OF 4″ AND AN AREA OF AT LEAST 2.5 TIMES THE NET AREA OF THE PRESTRESSING STEEL IN THE DUCT.
3. THE DESIGN IS BASED ON THE FOLLOWING PARAMETERS:
   STRAND TYPE = 1/2″ DIA. OR 0.6″ DIA. LOW RELAXATION STRANDS
   ANCHOR SET = 3/8″
   CURVATURE FRICTION COEFFICIENT = 0.20
   WOBBLE FRICTION COEFFICIENT = 0.0002/FT
   SPECIFY THE ACTUAL ANCHOR SET AND JACKING FORCE USED ON THE SHOP PLANS AND INCLUDE THESE IN THE TRANSFER FORCE CALCULATIONS.
4. THE DESIGN IS BASED ON THE ESTIMATED PRESTRESS LOSS OF POST-TENSIONING STRANDS SHOWN IN THE POST-TENSIONING TABLE DUE TO STEEL RELAXATION, ELASTIC SHORTENING CREEP AND SHRINKAGE OF CONCRETE.
5. SUBMIT THE STRESSING SEQUENCE AND ELONGATION CALCULATIONS TO THE ENGINEER FOR APPROVAL. INCLUDE ALL LOSSES DUE TO TENDON VERTICAL AND HORIZONTAL CURVATURE IN ELONGATION CALCULATIONS. THE FOLLOWING CRITERIA SHOULD BE MET DURING THE STRESSING SEQUENCE:
   A. DISTRIBUTE THE PRESTRESSING FORCE WITH AN APPROXIMATELY EQUAL AMOUNT IN EACH WEB.
   B. PRESTRESS SYMMETRICALLY ABOUT THE CENTERLINE OF THE BRIDGE.
   C. STRESS NO MORE THAN ONE-HALF OF THE PRESTRESSING FORCE IN ANY WEB BEFORE AN EQUAL FORCE IS STRESSED IN THE ADJACENT WEBS. AT NO TIME DURING STRESSING OPERATION WILL MORE THAN 1/6 OF THE TOTAL PRESTRESSING FORCE IS APPLIED ECCENTRICALLY ABOUT THE CENTERLINE OF THE BRIDGE.
6. STRESS ALL TENDONS FROM ONE END.

DRAFT – NOT RELEASED FOR CONSTRUCTION

REVISIONS

NO.	DATE	APPR.	REMARKS

UTAH DEPARTMENT OF TRANSPORTATION
STANDARD DRAWINGS FOR ROAD AND BRIDGE CONSTRUCTION
SALT LAKE CITY, UTAH

RECOMMENDED FOR APPROVAL — DATE
CHAIRMAN STANDARDS COMMITTEE APPROVED — DATE
DEPUTY DIRECTOR

POST-TENSIONED BULB TEE GIRDERS UBT74-PT
GIRDER DETAILS 2 AND DESIGN WORKSHEET

STD. DWG. NO.
UBT74PT-2

$$file$$
$$date$$

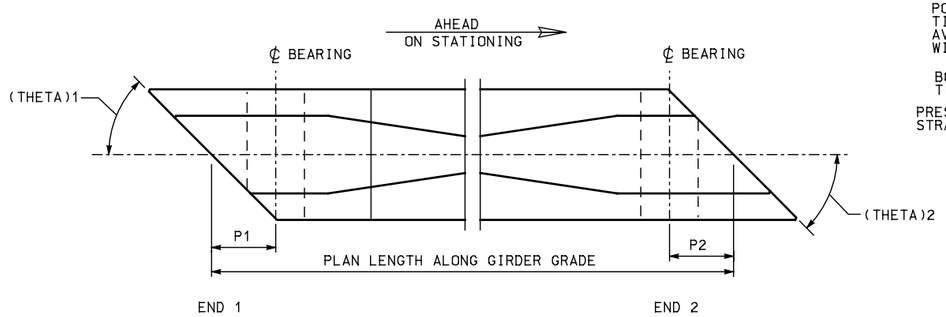

(14) GIRDER PLAN

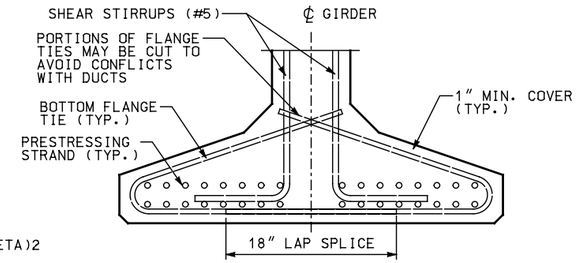

(15) BOTTOM FLANGE REINFORCING IN MIDDLE SEGMENTS

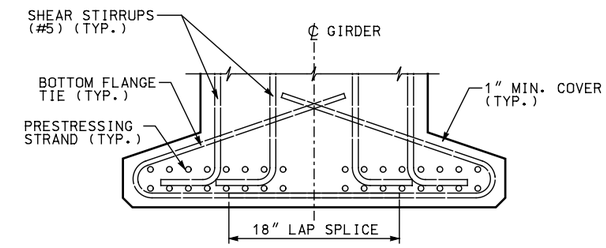

(16) BOTTOM FLANGE REINFORCING AT ENDS OF END SEGMENTS

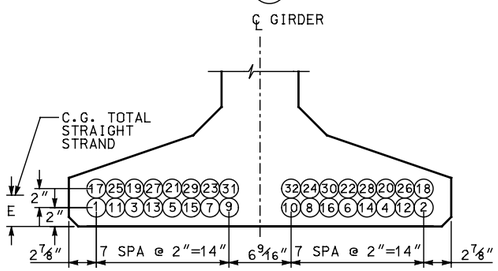

(17) BOTTOM FLANGE STRAND PATTERN

MID SEGMENT SHOWN, END SEGMENT SIMILAR
STRAIGHT STRAND LOCATION SEQUENCE SHALL BE AS SHOWN: (1), (2), (3), ETC.

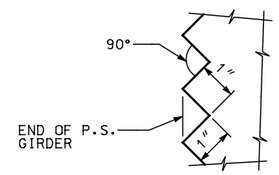

(18) SAWTOOTH DETAILS

SAWTEETH ARE FULL WIDTH – USE SAWTOOTH KEYS FROM BOTTOM OF BOTTOM FLANGE TO BOTTOM OF LOWEST HARPED STRAND AS WELL AS TOP FLANGE ADJACENT TO HARPED STRANDS AS SHOWN IN VIEW B AND E – GIRDER DETAILS 1 OF 4

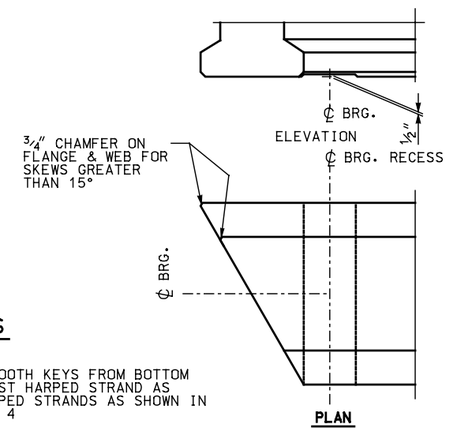

(19) BOTTOM FLANGE DETAILS ONLY AT CANTILEVER ABUTMENT

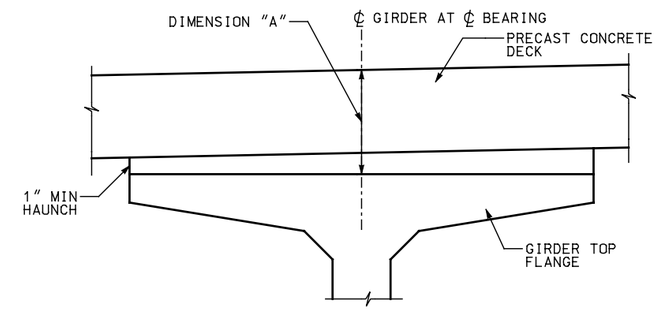

(20) DECK ELEVATION AT GIRDER ENDS

GIRDER SCHEDULE

DIMENSION "A" AT ℄ BEARINGS = SEE "A" DIMENSION TABLE

SPAN	GIRDER	MINIMUM CONCRETE COMPR. STRENGTH @ FINAL F'C (KSI)	MINIMUM CONCRETE COMPR. STRENGTH @ RELEASE F'CI (KSI)	END SEGMENT 1 END 1 TYPE	END SEGMENT 1 END 2 TYPE	END SEGMENT 1 (THETA)1 (14)	END SEGMENT 1 (THETA)2 (14)	END SEGMENT 1 P1 (14)	END SEGMENT 1 PLAN LENGTH (ALONG ℄ GIRDER GRADE)	END SEGMENT 1 STRAIGHT NO. OF STRANDS	END SEGMENT 1 STRAIGHT JACKING FORCE (LBS.)	END SEGMENT 1 C.G. STRANDS (IN.) E (17)	END SEGMENT 1 C (IN.)	END SEGMENT 1 D (40 DAYS) (IN.)	MID-SEGMENT END 1 TYPE	MID-SEGMENT END 2 TYPE	MID-SEGMENT (THETA)1 (14)	MID-SEGMENT (THETA)2 (14)	MID-SEGMENT PLAN LENGTH (ALONG ℄ GIRDER GRADE)	MID-SEGMENT STRAIGHT NO. OF STRANDS	MID-SEGMENT STRAIGHT JACKING FORCE (LBS)	MID-SEGMENT C.G. STRANDS (IN.) E (17)	MID-SEGMENT C (IN.)	MID-SEGMENT D (IN.)	END SEGMENT 2 END 1 TYPE	END SEGMENT 2 END 2 TYPE	END SEGMENT 2 (THETA)1 (14)	END SEGMENT 2 (THETA)2 (14)	END SEGMENT 2 P2 (14)	END SEGMENT 2 PLAN LENGTH (ALONG ℄ GIRDER GRADE)	END SEGMENT 2 STRAIGHT NO. OF STRANDS	END SEGMENT 2 STRAIGHT JACKING FORCE (LBS)	END SEGMENT 2 C.G. STRANDS (IN.) E (17)	END SEGMENT 2 Ld (IN.)	END SEGMENT 2 C (IN.)	END SEGMENT 2 D (40 DAYS) (IN.)

(20) "A" DIMENSION TABLE

PIER	"A" (40 DAYS) (IN)	"A" (120 DAYS) (IN)

DIAPHRAGM TYPE	END TYPE	BEARING RECESS	X (2)(22)	Y (1)(2)(22)	Z (1)(2)(22)	SAWTEETH
INTEGRAL ABUTMENT	A	NO	0"	8"	28"	YES
CANTILEVER ABUTMENT	B	YES	0"	0"	0"	NO
SPLICED GIRDER CLOSURE POUR	F	NO	1'-10"	1'-6"	1'-9"	YES

NOTE: FOR DIMENSION "A", SEE "GIRDER SCHEDULE"

FOR END TYPE "C"
ENDS AHEAD ON STATION
G5 BARS LEFT OF ℄ B1=0" (G4,G9) B2=0" (G5)
ENDS BACK ON STATION
G5 BARS RIGHT OF ℄ B1=1 1/2" (G4,G9) B2=3" (G5)

MARK	LOCATION	SIZE	
G1	GIRDER END STIRRUPS	5	
G2	GIRDER STIRRUPS	5	
G3	GIRDER TOP FLANGE	5	STR.
G4	GIRDER LONGIT. FULL LENGTH	5	STR.
G5	GIRDER LONGIT.	5	
G6	GIRDER END TIES	W12d	
G7	GIRDER BOT. FLANGE TIES	3	STR.
G9	GIRDER LONGIT.	6	
G10	GIRDER STIRRUPS	4	
G11	GIRDER STIRRUPS	5	
G12	GIRDER END LONGIT.	5	

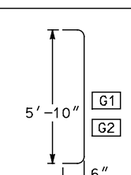

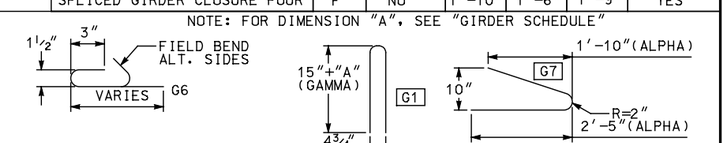

(ALPHA) – VARIES FOR SKEWED ENDS
(DELTA – #3 OR #4 MAY BE SUBSTITUTED. FIELD BENDING IS OPTIONAL
(BETA)– PAIRS OF G7 BARS, OR G9 AND G10 BARS, MAY BE USED INTERCHANGEABLY AS BOTTOM FLANGE TIES.
(GAMMA)– SHALL BE CHECKED FOR EFFECT OF VERTICAL CURVE.

REVISIONS

NO.	DATE	APPR.	REMARKS

DRAFT – NOT RELEASED FOR CONSTRUCTION

UTAH DEPARTMENT OF TRANSPORTATION
STANDARD DRAWINGS FOR ROAD AND BRIDGE CONSTRUCTION
SALT LAKE CITY, UTAH

RECOMMENDED FOR APPROVAL — DATE
CHAIRMAN STANDARDS COMMITTEE APPROVED — DATE
DEPUTY DIRECTOR

POST-TENSIONED BULB TEE GIRDER UBT74-PT

GIRDER DETAILS 3 AND DESIGN DETAILS

STD. DWG. NO.
UBT74PT-3

$$file$$
$$date$$

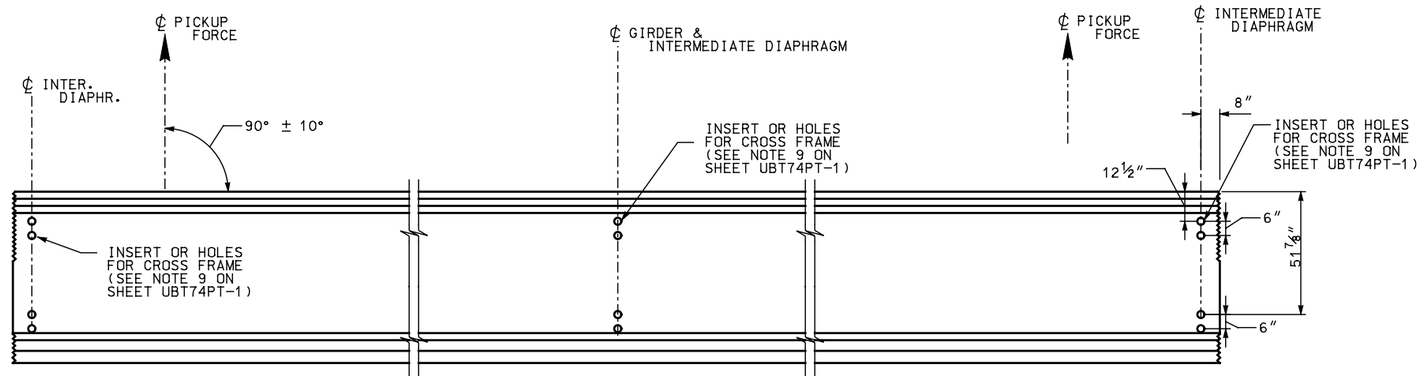

(21) GIRDER ELEVATION
MID-SEGMENT

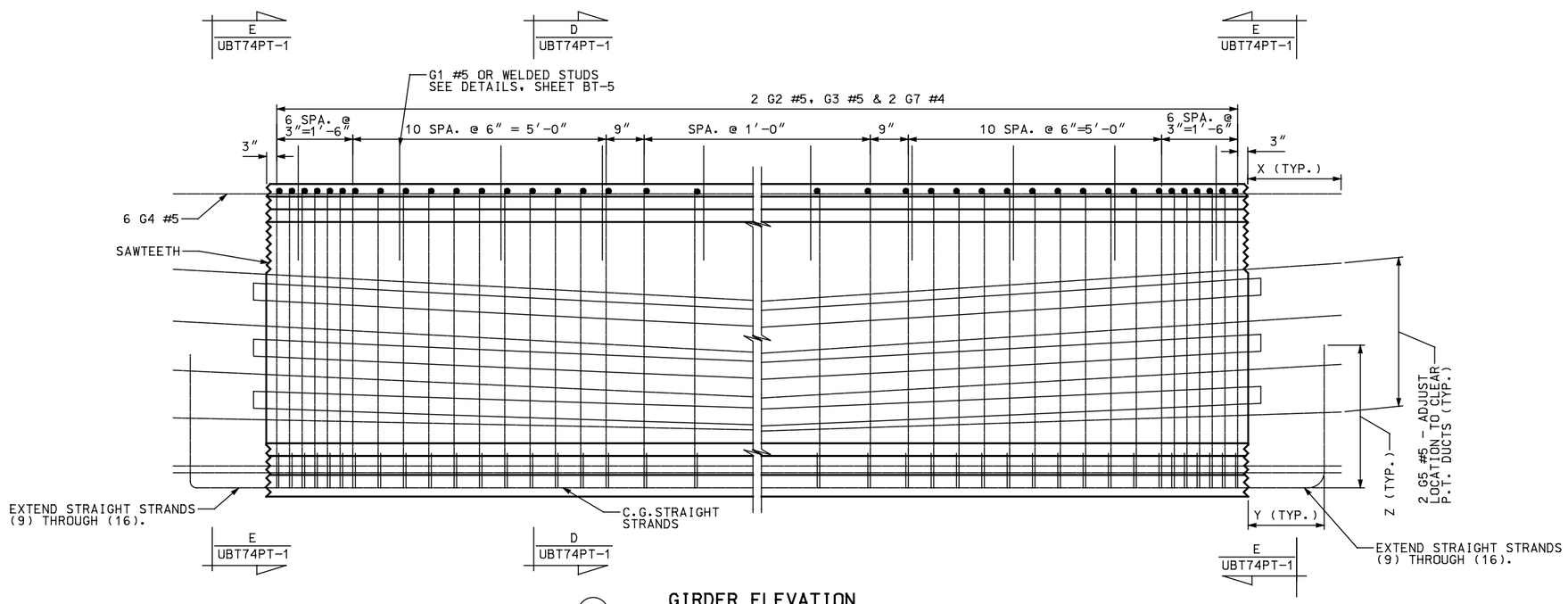

(22) GIRDER ELEVATION
MID-SEGMENT REINFORCING

REVISIONS

NO.	DATE	APPR.	REMARKS

DRAFT – NOT RELEASED FOR CONSTRUCTION

UTAH DEPARTMENT OF TRANSPORTATION
STANDARD DRAWINGS FOR ROAD AND BRIDGE CONSTRUCTION
SALT LAKE CITY, UTAH

RECOMMENDED FOR APPROVAL — DATE

CHAIRMAN STANDARDS COMMITTEE APPROVED — DATE

DEPUTY DIRECTOR

POST-TENSIONED BULB TEE
GIRDER UBT74-PT
GIRDER DETAILS 4

STD. DWG. NO.
UBT74PT-4

$$file$$

$$date$$

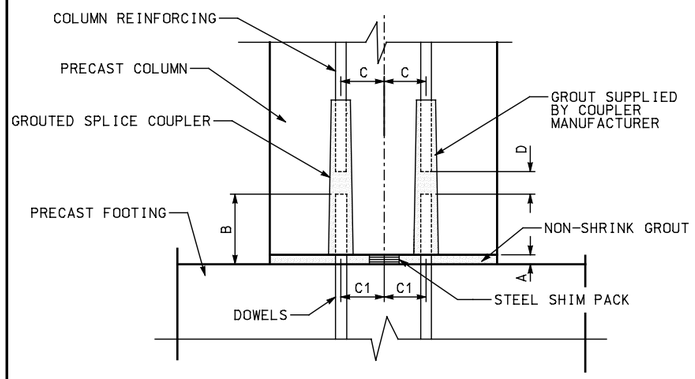

GROUTED SPLICE COUPLER DETAILS

NOTES:
1. USE MATCHING TEMPLATES FOR THE LOCATION OF COLUMN REINFORCEMENT AND GROUTED SPLICE COUPLER PLACEMENT WITHIN THE ELEMENTS TO CONTROL CRITICAL DIMENSIONS "C" AND "C1", WHICH WOULD BE IDENTICAL.
2. CONSULT MANUFACTURER OF THE GROUTED SPLICE COUPLER FOR PROPER DIMENSIONS "B" AND "D" AND FOR TOLERANCE ON THESE DIMENSIONS.
3. BEFORE EXECUTING GROUTED SPLICE COUPLER ASSEMBLIES, ALWAYS SEEK INSTALLATION RECOMMENDATIONS FROM THE MANUFACTURER OF THE GROUTED SPLICE COUPLER USED.

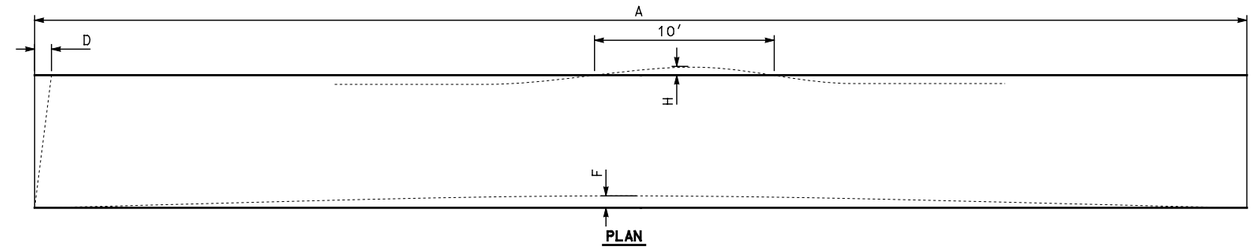

PLAN

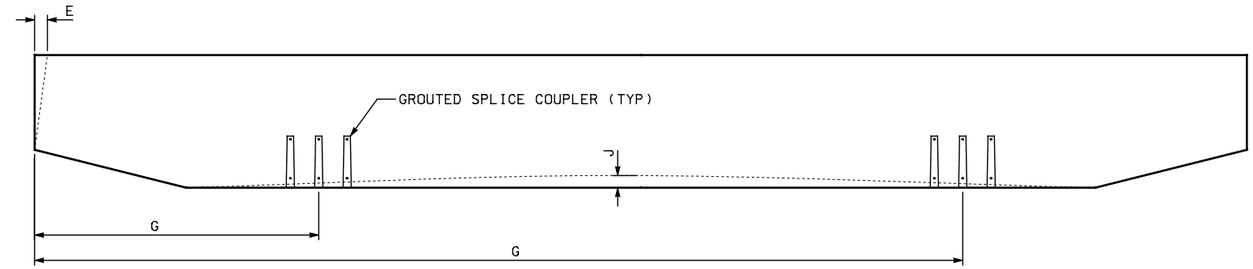

ELEVATION

GROUTED SPLICE COUPLER TOLERANCES

A	SHIM PACK HEIGHT	¾" ± ⅜"
B	DOWEL HEIGHT	CONSULT MANUFACTURER
C C1	LOCATION OF COLUMN REINFORCING, GROUTED SPLICE COUPLER, AND FOOTING DOWELS MEASURED FROM A COMMON REFERENCE POINT	± ¼"
D	GAP BETWEEN DOWELS AND COLUMN REINFORCING	CONSULT MANUFACTURER

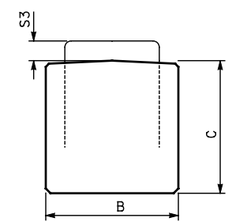

SECTION

PIER CAP FABRICATION TOLERANCES

A	LENGTH	+ ¾"
B	WIDTH (OVERALL)	± ¼"
C	DEPTH (OVERALL)	± ¼"
D	VARIATION FROM SPECIFIED PLAN END SQUARENESS OR SKEW	± ⅛" PER 12 INCH WIDTH ± ½" MAXIMUM
E	VARIATION FROM SPECIFIED ELEVATION END SQUARENESS OR SKEW	± ⅛" PER 12 INCH WIDTH ± ½" MAXIMUM
F	SWEEP, FOR MEMBER LENGTH: UP TO 40 FEET 40 FEET TO 60 FEET OVER 60 FEET	± ± ¼" ± ½" ± ⅝"
G	LOCATION OF GROUTED SPLICE COUPLER MEASURED FROM A COMMON REFERENCE POINT	± ¼"
H	LOCAL SMOOTHNESS OF ANY SURFACE	± ¼" IN 10 FEET
J	VARIATION FROM SPECIFIED CAMBER	+ ⅛" PER 10 FEET + ½" MAXIMUM
S3	STIRRUP PROJECTION FROM CAP SURFACE	+ ¼", − ½"

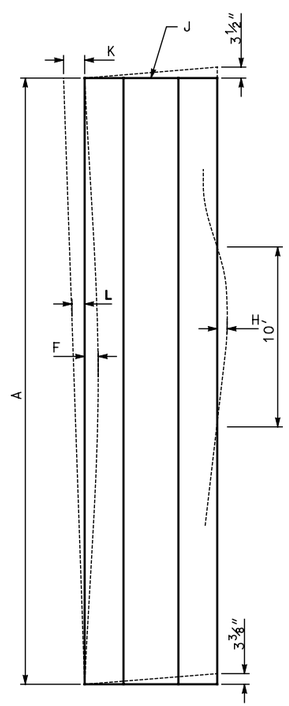

ELEVATION

COLUMN FABRICATION TOLERANCES

A	LENGTH	± ½"
B	WIDTH (OVERALL)	± ¼"
C	DEPTH (OVERALL)	± ¼"
D	VARIATION FROM SPECIFIED END SQUARENESS OR SKEW	± ⅛" PER 12 INCH WIDTH ± ⅜" MAXIMUM
F	SWEEP, FOR MEMBER LENGTH:	± ⅛" PER 10 FEET ± ½" MAXIMUM
G	LOCATION OF GROUTED SPLICE COUPLER MEASURED FROM A COMMON REFERENCE POINT	± ¼"
H	LOCAL SMOOTHNESS OF ANY SURFACE	± ¼" IN 10 FEET

COLUMN ERECTION TOLERANCES

J	TOP ELEVATION FROM NOMINAL TOP ELEVATION MAXIMUM LOW MAXIMUM HIGH	 ½" ¼"
K	MAXIMUM PLUMB VARIATION OVER HEIGHT OF COLUMN	½"
L	PLUMB IN ANY 10 FEET OF COLUMN HEIGHT	¼"

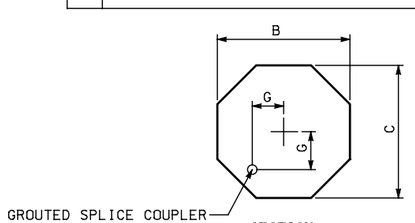

SECTION

REVISIONS

NO.	DATE	APPR.	REMARKS

DRAFT – NOT RELEASED FOR CONSTRUCTION

UTAH DEPARTMENT OF TRANSPORTATION
STANDARD DRAWINGS FOR ROAD AND BRIDGE CONSTRUCTION
SALT LAKE CITY, UTAH

RECOMMENDED FOR APPROVAL — DATE

CHAIRMAN STANDARDS COMMITTEE APPROVED — DATE

DEPUTY DIRECTOR

TYPICAL TOLERANCES FOR PRECAST ELEMENTS
PIER ELEMENTS

STD. DWG. NO.
T – 1

$$filo$$
$$date$$

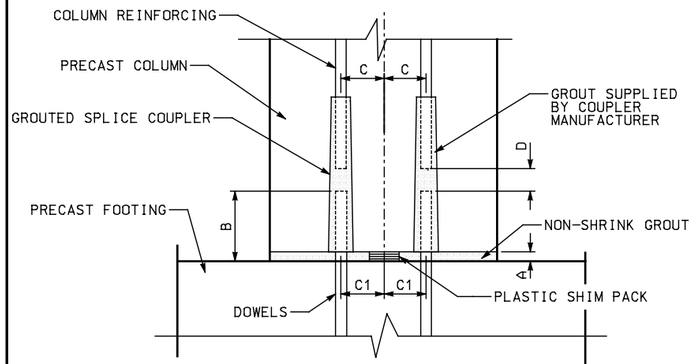

GROUTED SPLICE COUPLER DETAILS

NOTES:
1. USE MATCHING TEMPLATES FOR THE LOCATION OF COLUMN REINFORCEMENT AND GROUTED SPLICE COUPLER PLACEMENT WITHIN THE ELEMENTS TO CONTROL CRITICAL DIMENSIONS "C" AND "C1", WHICH WOULD BE IDENTICAL.
2. CONSULT MANUFACTURER OF THE GROUTED SPLICE COUPLER FOR PROPER DIMENSIONS "B" AND "D" AND FOR TOLERANCE ON THESE DIMENSIONS.
3. BEFORE EXECUTING GROUTED SPLICE COUPLER ASSEMBLIES, ALWAYS SEEK INSTALLATION RECOMMENDATIONS FROM THE MANUFACTURER OF THE GROUTED SPLICE COUPLER USED.

GROUTED SPLICE COUPLER TODLERANCES

A	SHIM PACK HEIGHT	3/4" ± 3/8"
B	DOWEL HEIGHT	CONSULT MANUFACTURER
C C1	LOCATION OF COLUMN REINFORCING, GROUTED SPLICE COUPLER, AND FOOTING DOWELS MEASURED FROM A COMMON REFERENCE POINT	± 1/4"
D	GAP BETWEEN DOWELS AND COLUMN REINFORCING	CONSULT MANUFACTURER

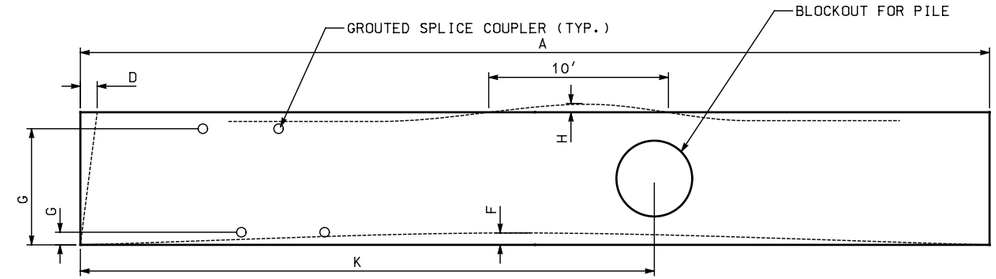

PLAN

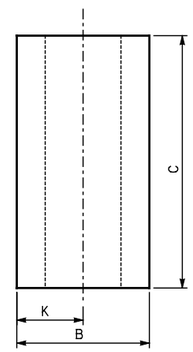

SECTION

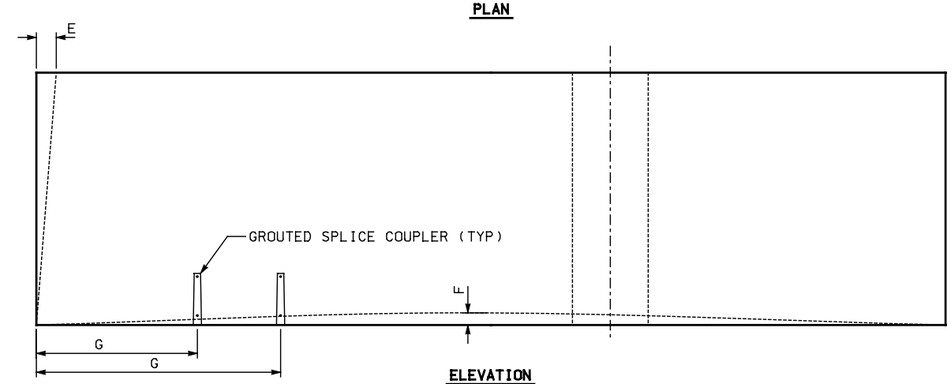

ELEVATION

NOTE: THESE TOLERANCES APPLY TO THE FOLLOWING ELEMENTS
INTEGRAL ABUTMENT STEMS
CANTILEVER ABUTMENT STEMS
ABUTMENT BACKWALLS
CANTILEVER RETAINING WALLS

WALL PANEL FABRICATION TOLERANCES

A	LENGTH	± 1/4"
B	WIDTH (OVERALL)	± 1/4"
C	DEPTH (OVERALL)	± 1/4"
D	VARIATION FROM SPECIFIED PLAN END SQUARENESS OR SKEW	± 1/2"
E	VARIATION FROM SPECIFIED ELEVATION END SQUARENESS OR SKEW	± 1/2"
F	SWEEP OVER MEMBER LENGTH:	± 3/8"
G	LOCATION OF GROUTED SPLICE COUPLER MEASURED FROM A COMMON REFERENCE POINT	± 1/4"
H	LOCAL SMOOTHNESS OF ANY SURFACE	± 1/4" IN 10 FEET
K	LOCATION OF BLOCKOUT FOR PILES	± 1"

REVISIONS

NO.	DATE	APPR.	REMARKS

DRAFT – NOT RELEASED FOR CONSTRUCTION

UTAH DEPARTMENT OF TRANSPORTATION
STANDARD DRAWINGS FOR ROAD AND BRIDGE CONSTRUCTION
SALT LAKE CITY, UTAH

RECOMMENDED FOR APPROVAL _____ DATE

CHAIRMAN STANDARDS COMMITTEE APPROVED _____ DATE

DEPUTY DIRECTOR

TYPICAL TOLERANCES FOR PRECAST ELEMENTS
ABUTMENT AND WALL ELEMENTS

STD. DWG. NO.
T – 2

$$date$$ $$file$$

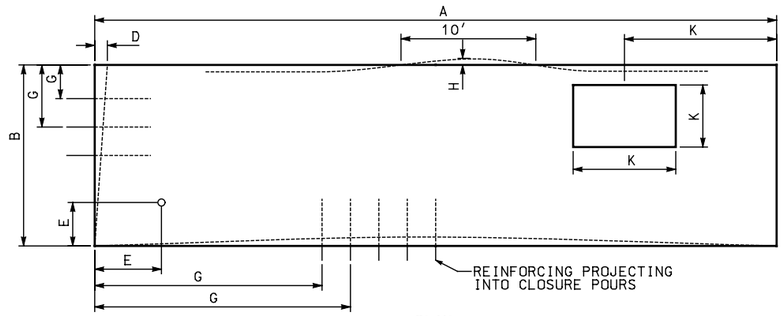

PLAN

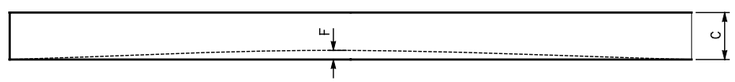

ELEVATION

APPROACH SLAB TOLERANCES

A	LENGTH	± 1/4″
B	WIDTH (OVERALL)	± 1/4″
C	DEPTH (OVERALL)	± 1/4″
D	VARIATION FROM SPECIFIED PLAN END SQUARENESS OR SKEW	± 1/2″
E	LOCATION OF LEVELING BOLTS	± 1″
F	SWEEP OVER MEMBER LENGTH:	± 3/8″
G	LOCATION OF PROJECTING REINFORCING MEASURED FROM A COMMON REFERENCE POINT	± 1/2″
H	LOCAL SMOOTHNESS OF ANY SURFACE	± 1/4″ IN 10 FEET
K	LOCATION AND SIZE OF BLOCKOUT FOR BASINS	± 1/2″

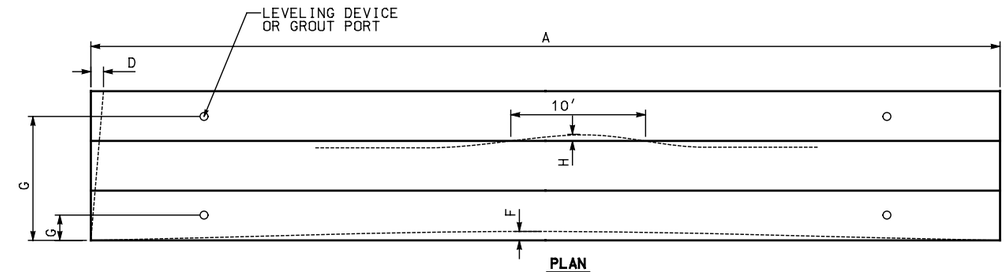

PLAN

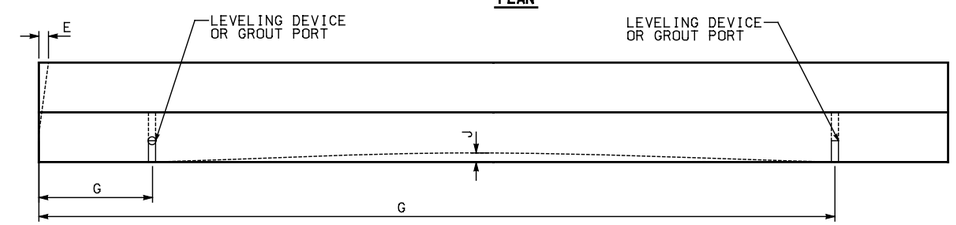

ELEVATION

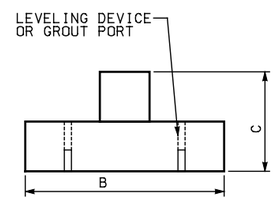

SECTION

SLEEPER SLAB FABRICATION TOLERANCES

A	LENGTH	± 1/2″
B	WIDTH (OVERALL)	± 1/4″
C	DEPTH (OVERALL)	± 1/4″
D	VARIATION FROM SPECIFIED PLAN END SQUARENESS OR SKEW	± 1/8″ PER 12 INCH WIDTH ± 1/2″ MAXIMUM
E	VARIATION FROM SPECIFIED ELEVATION END SQUARENESS OR SKEW	± 1/8″ PER 12 INCH WIDTH ± 1/2″ MAXIMUM
F	SWEEP OVER MEMBER LENGTH:	± 1/2″
G	LOCATION OF LEVELING DEVICE OR GROUT PORT MEASURED FROM A COMMON REFERENCE POINT	± 2″
H	LOCAL SMOOTHNESS OF ANY SURFACE	± 1/4″ IN 10 FEET
J	VARIATION FROM SPECIFIED CAMBER	± 1/8″ PER 10 FEET ± 1/2″ MAXIMUM

REVISIONS

NO.	DATE	APPR.	REMARKS

DRAFT – NOT RELEASED
FOR CONSTRUCTION

UTAH DEPARTMENT OF TRANSPORTATION
STANDARD DRAWINGS FOR ROAD AND BRIDGE CONSTRUCTION
SALT LAKE CITY, UTAH

RECOMMENDED FOR APPROVAL _____ DATE

CHAIRMAN STANDARDS COMMITTEE APPROVED _____ DATE

DEPUTY DIRECTOR

TYPICAL TOLERANCES
FOR PRECAST ELEMENTS
APPROACH SLAB ELEMENTS

STD. DWG. NO.
T – 3

$$date$$ $$file$$