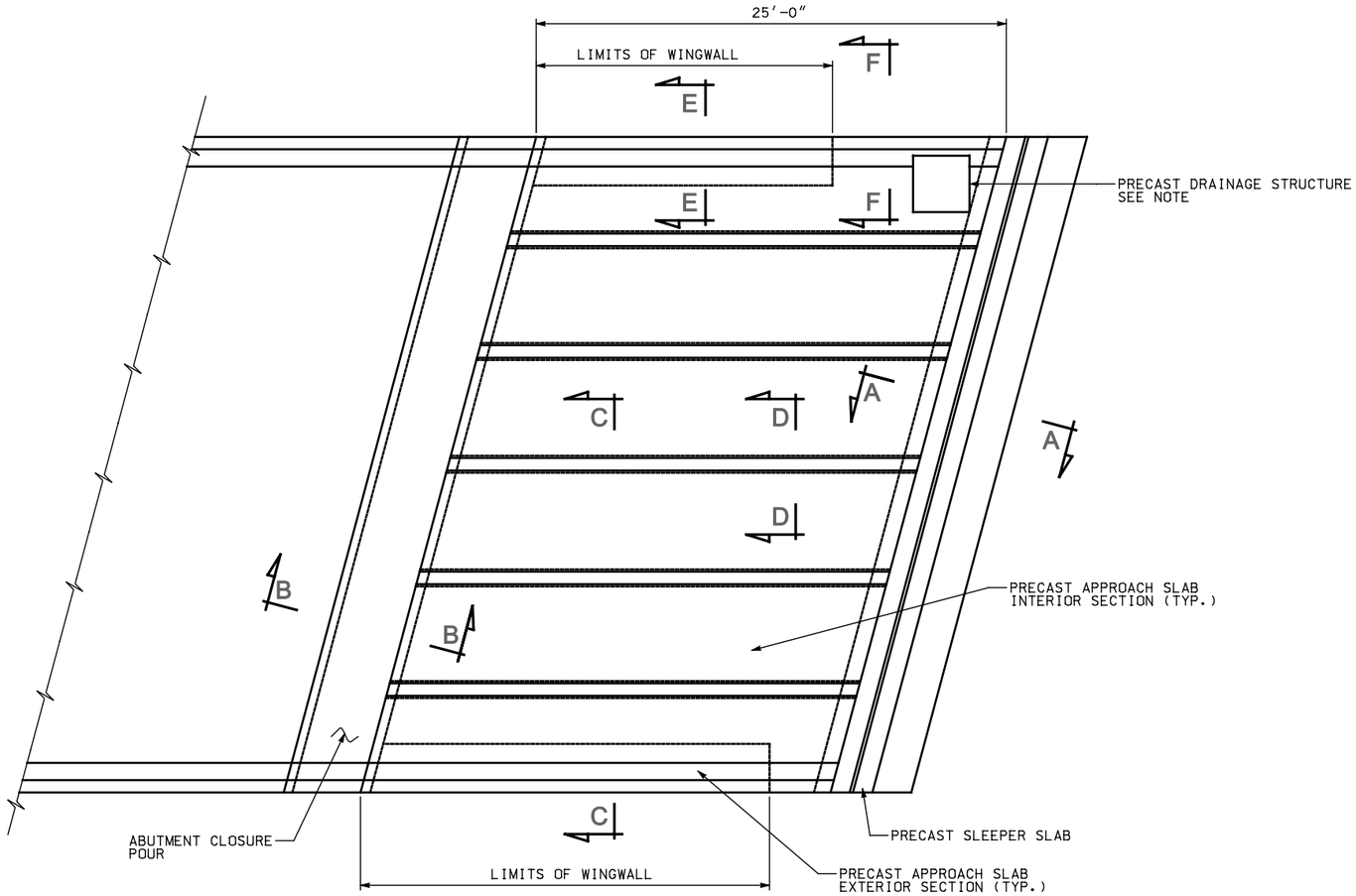

APPROACH SLAB PLAN

NOTE: PRECAST DRAINAGE STRUCTURE, FRAME, AND GRATE TO BE PAID FOR UNDER SEPARATE ITEMS.

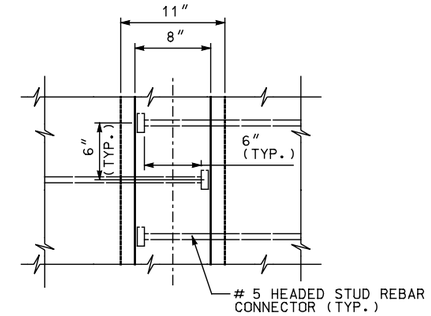

LONGITUDINAL JOINT PLAN OPTION 1

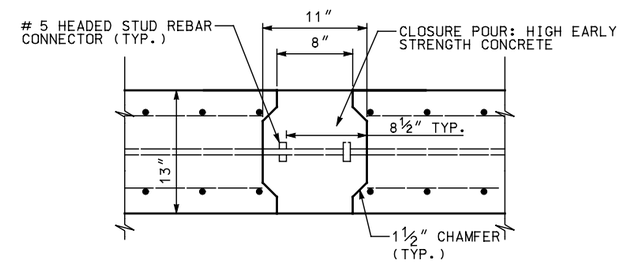

SECTION D: LONGITUDINAL JOINT OPTION 1

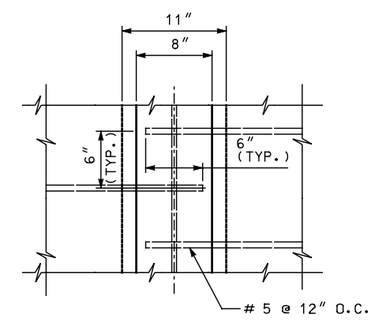

SECTION D: LONGITUDINAL JOINT PLAN OPTION 2

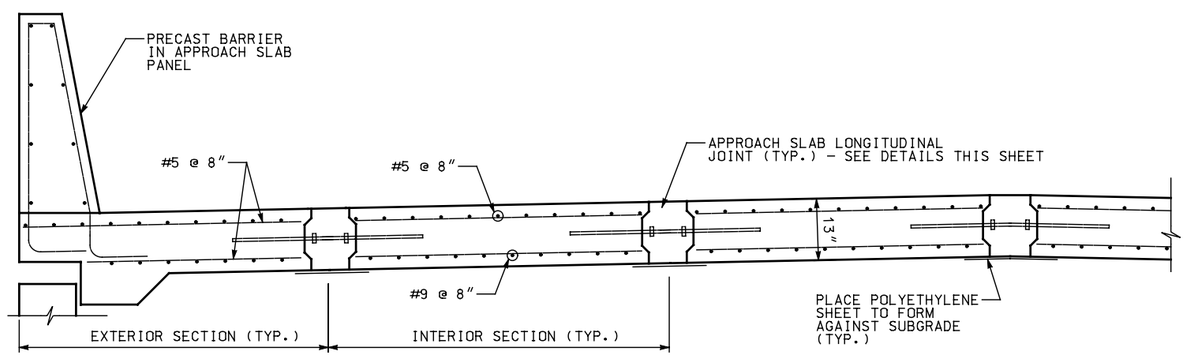

SECTION C: TYPICAL APPROACH SLAB

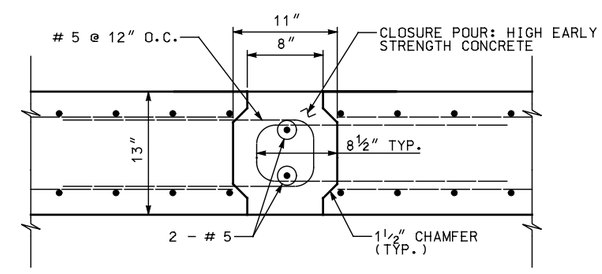

SECTION D: LONGITUDINAL JOINT OPTION 2

NO.	DATE	BY	REMARKS

REVISIONS

UTAH DEPARTMENT OF TRANSPORTATION
SALT LAKE CITY, UTAH
STRUCTURES DIVISION

DESIGN — CHECK
DRAWN — CHECK
QUANT. — CHECK

APPROVAL RECOMM. — DATE — SENIOR DESIGN ENGR.
APPROVED FOR ISSUE BY UDOT — DATE — UDOT BRIDGE ENGR.

TYPICAL DETAIL SHEET
PRECAST APPROACH SLAB
TYPICAL DETAILS 1

PROJECT NUMBER

COUNTY

AS - 1
DRG. NO.

SHT. OF

approach slab.dgn
4/30/2009

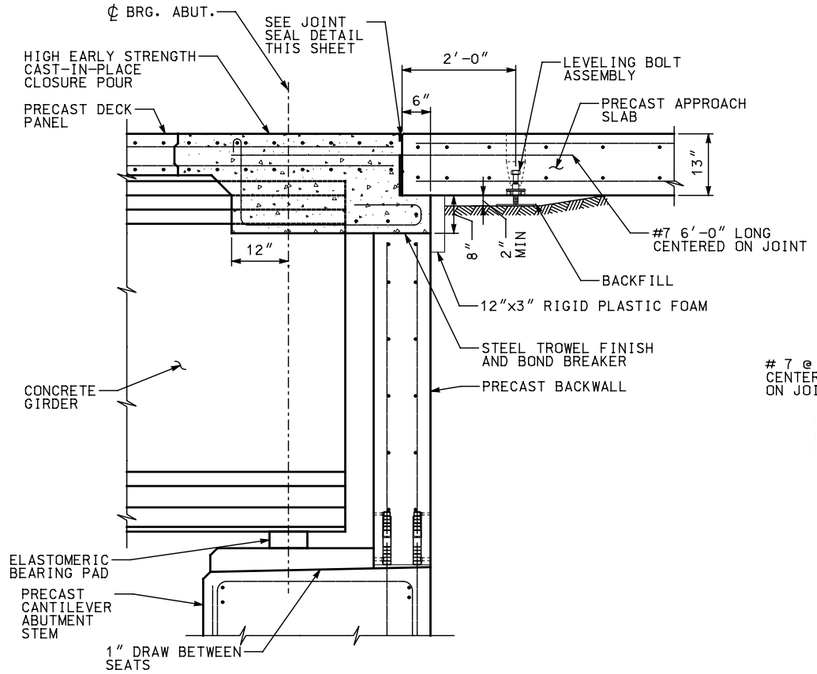

SECTION B: CANTILEVER ABUTMENT

NOTE: CONCRETE GIRDER SHOWN STEEL BEAM SIMILAR.

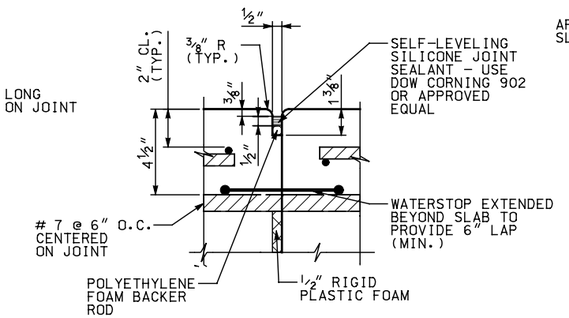

JOINT SEAL JOINT CLOSURE POUR

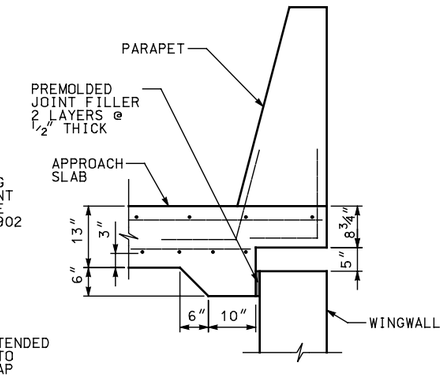

SECTION E

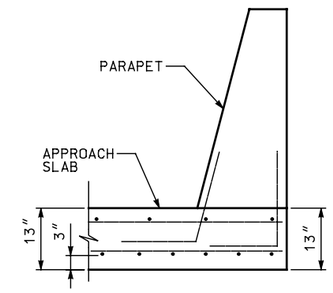

SECTION F

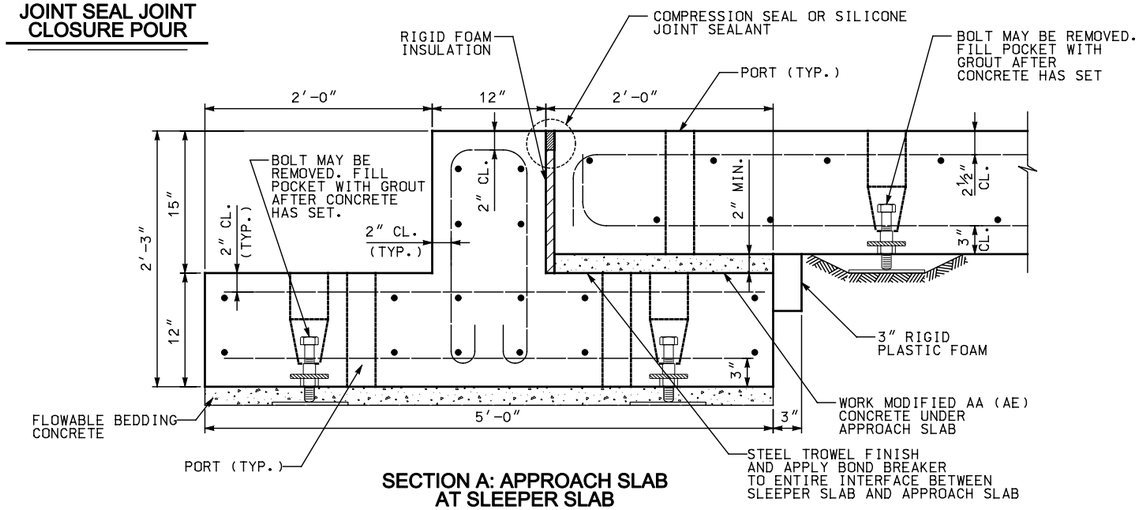

SECTION A: APPROACH SLAB AT SLEEPER SLAB

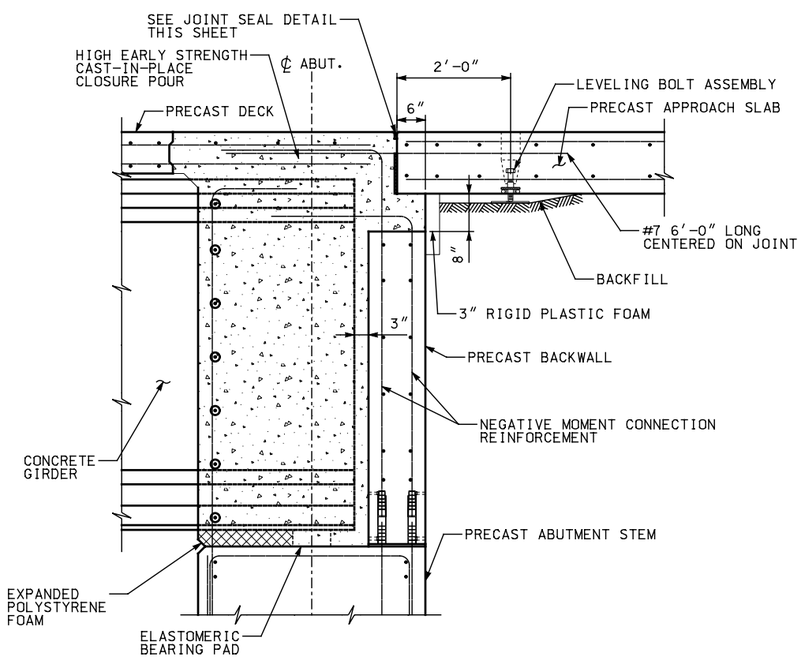

SECTION B: INTEGRAL ABUTMENT

NOTE: CONCRETE GIRDER SHOWN STEEL BEAM SIMILAR.

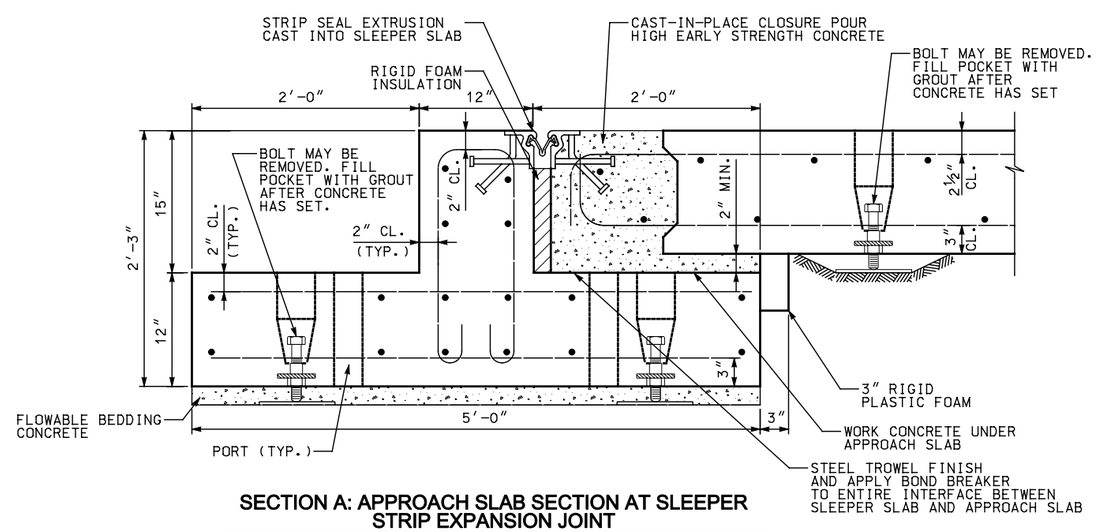

SECTION A: APPROACH SLAB SECTION AT SLEEPER STRIP EXPANSION JOINT

NOTE: CONTRACTOR TO DETERMINE SIZE AND SPACING OF GROUT PORTS BASED ON FLOWABLE BEDDING CONCRETE

approach slab.dgn

4/30/2009

NO.	DATE	BY	REMARKS

REVISIONS

UTAH DEPARTMENT OF TRANSPORTATION
SALT LAKE CITY, UTAH
STRUCTURES DIVISION

DESIGN — CHECK
DRAWN — CHECK
QUANT. — CHECK

SENIOR DESIGN ENGR. — DATE
UDOT BRIDGE ENGR. — DATE

APPROVAL RECOMM.
APPROVED FOR USE BY UDOT

TYPICAL DETAIL SHEET
PRECAST APPROACH SLAB
TYPICAL DETAILS 2

PROJECT NUMBER

COUNTY

AS - 2
DRG. NO.

SHT. OF

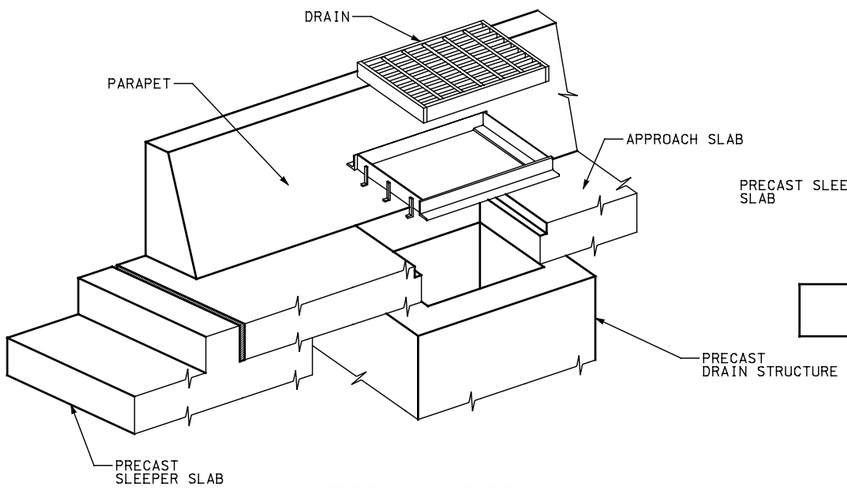

APPROACH SLAB DRAIN ISOMETRIC VIEW

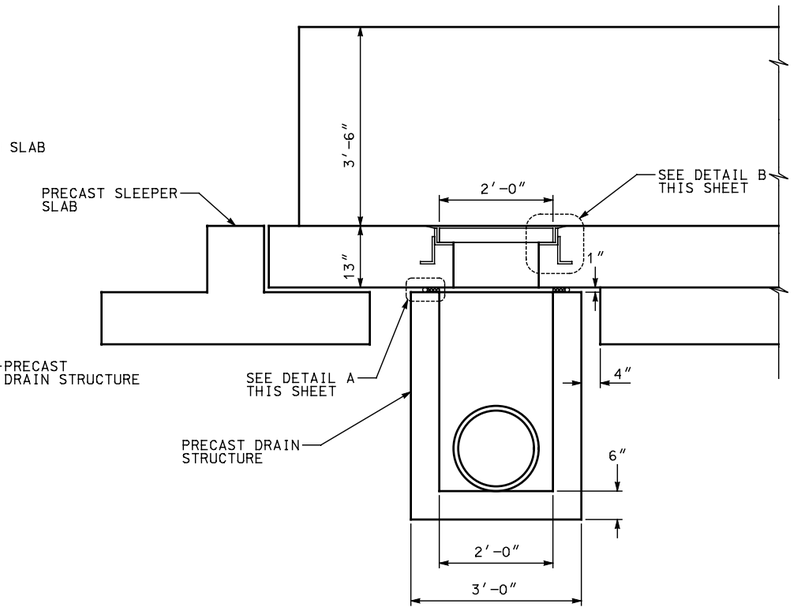

SECTION A: TYPICAL LONGITUDINAL APPROACH SLAB DRAIN

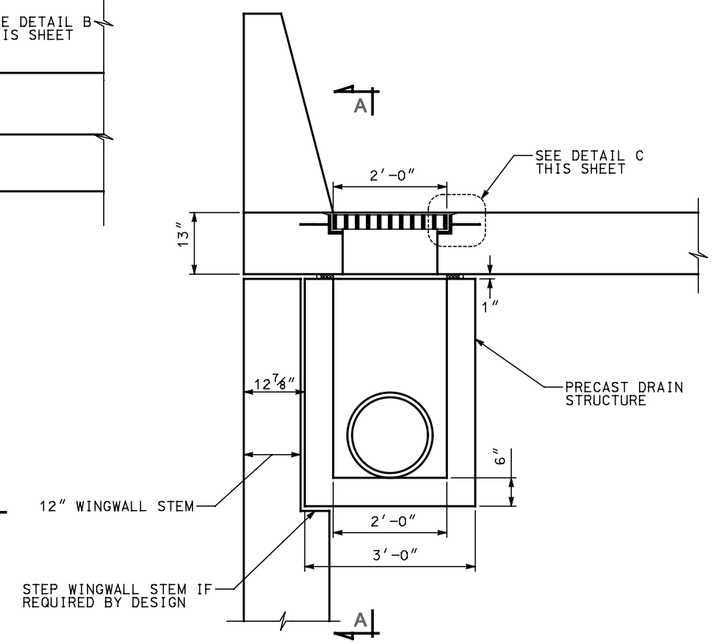

TYPICAL TRANVERSE SECTION APPROACH SLAB DRAIN

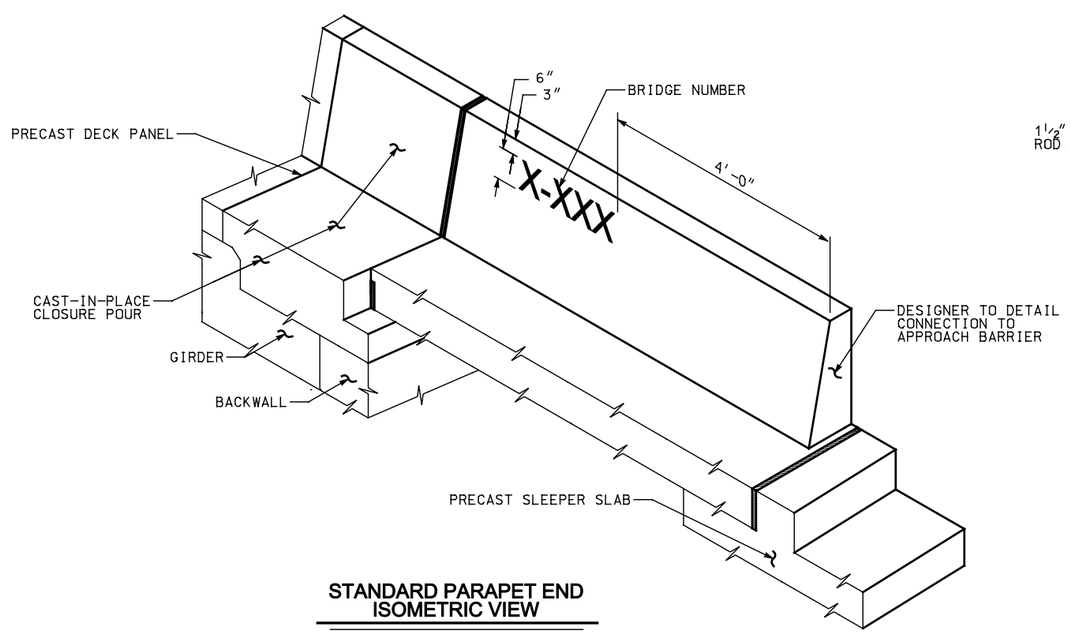

STANDARD PARAPET END ISOMETRIC VIEW

NOTE: CONNECTION TO APPROACH SLAB NOT SHOWN

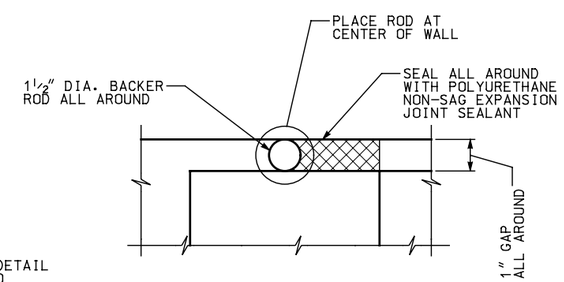

DETAIL A

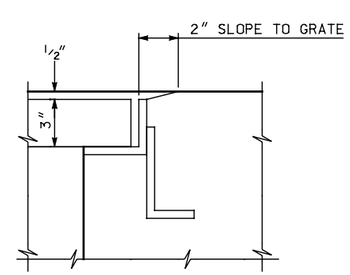

DETAIL B

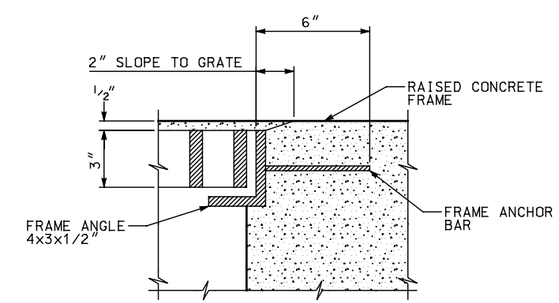

DETAIL C

NO.	DATE	BY	REMARKS

REVISIONS

UTAH DEPARTMENT OF TRANSPORTATION
SALT LAKE CITY, UTAH
STRUCTURES DIVISION

DESIGN — CHECK
DRAWN — CHECK
QUANT. — CHECK

APPROVAL RECOMM. — DATE — SENIOR DESIGN ENGR.
APPROVED FOR USE BY UDOT — DATE — UDOT BRIDGE ENGR.

TYPICAL DETAIL SHEET
PRECAST APPROACH SLAB
TYPICAL DETAILS 3

PROJECT NUMBER

COUNTY

AS - 3
DRG. NO.

SHT. OF

Approach Slab, Drain and Parapet end Details 2d.dgn

4/30/2009