PRECAST BULB TEE GIRDERS GENERAL NOTES

GUIDELINES

THESE GUIDELINE DRAWINGS CAN BE USED ONLY FOR BRIDGES WHICH HAVE ALL OF THE FOLLOWING CHARACTERISTICS:

SKEW ANGLE: 0 TO 45 DEGREES

SPECIAL CONSIDERATIONS WITH PRECAST/PRESTRESSED PANELS:

FOR USE WITH PRECAST PANELS - MAXIMUM BEAM/GIRDER SPACING = 10'-0"

FOR USE WITH PRESTRESSED PANELS - MAXIMUM BEAM/GIRDER SPACING = 12'-0"

MAXIMUM OVERHANG = 4'-0"

MINIMUM OVERHANG = 1'-0"

INTERMEDIATE DIAPHRAGMS:
- 1/5 POINTS OF SPAN FOR SPAN LENGTHS GREATER THAN 160'-0"
- 1/4 POINTS OF SPAN FOR SPAN LENGTHS 120'-0" TO 160'-0"
- 1/3 POINTS OF SPAN FOR SPAN LENGTHS 80'-0" TO 120'-0"
- 1/2 POINTS OF SPAN FOR SPAN LENGTHS LESS THAN 80'-0".

DO NOT USE TRANSFORMED SECTION PROPERTIES FOR GIRDER DESIGN.

IMPLEMENTATION

IT IS THE DESIGNER'S RESPONSIBILITY TO:

FILL IN TABLE FOR EACH GIRDER TYPE ON A PROJECT.

CREATE A FRAMING PLAN OF EACH SPAN. SEE PRECAST BULB TEE GIRDER MANUAL SECTION 4.

CREATE TYPICAL TRANSVERSE SECTIONS AS NEEDED. SEE PRECAST BULB TEE GIRDER MANUAL SECTION 4.

CREATE SPECIAL GIRDER END DETAILS AS NEEDED. SUCH AS, VARYING GEOMETRIC END TREATMENTS, EXTENSIONS OF PRESTRESSING STRAND FOR GIRDER ENDS FOR CONTINUITY OF LIVE LOAD.

DESIGN AND CHECK WEB SHEAR REINFORCEMENT ALONG GIRDER SPAN.

DESIGN AND CHECK THAT END REINFORCEMENT DETAILED SATISFIES ALL APPLICABLE CODE PROVISIONS.

DESIGN AND CHECK ALL CHARACTERISTICS RELATED TO REQUIRED CLOSURE POURS.

ACCOUNT FOR THE HAUNCH LOAD CALCULATIONS,BUT DO NOT CONSIDER IT IN THE COMPOSITE SECTIONS PROPERTIES.

ENSURE APPLICABLE GENERAL NOTES ARE INCLUDED IN THE PLAN SET.

GENERAL NOTES

USE AASHTO LRFD BRIDGE DESIGN SPECIFICATIONS, 4TH EDITION WITH ALL INTERIM PROVISIONS EXCEPT AS NOTED OTHERWISE, FOR ALL BULB TEE GIRDER DESIGNS

USE AN HL-93 LOAD INCLUDING A 35 PSF LOAD FOR FUTURE OVERLAY FOR GIRDER DESIGNS.

PRESTRESSED GIRDER CONCRETE: $f'c$ = 8,500 PSI

CONCRETE STRENGTH UP TO 10,000 PSI MAY BE USED WITH PRIOR APPROVAL FROM THE DEPARTMENT.

SPECIFY CONCRETE RELEASE STRENGTH FOR EACH GIRDER BASED ON DESIGN.

CLOSURE POUR CONCRETE
FOR POST TENSIONED GIRDERS: $f'c$ = MATCH GIRDER STRENGTH

REINFORCING STEEL (COATED) fy = 60,000 PSI
(WELDED WIRE REINFORCEMENT IS NOT ALLOWED)

PRESTRESSED
LOW RELAXATION STRAND: 0.6" DIAMETER
AASHTO M 203 GRADE 270

USE UTAH DEPARTMENT OF TRANSPORTATION STANDARD SPECIFICATIONS FOR ROAD AND BRIDGE CONSTRUCTION (THE LATEST EDITION AND SUPPLEMENTS THERETO WHICH ARE IN EFFECT AT THE DATE OF REQUEST FOR BIDS) ALONG WITH SPECIAL PROVISIONS SECTION 03339S - FULL DEPTH STANDARD PRECAST CONCRETE DECK PANELS FOR MATERIALS, CONSTRUCTION AND WORKMANSHIP.

DESIGN AND DETAIL LIFTING SUPPORTS AND HANDLING CONSIDERATIONS IN ACCORDANCE WITH THE PCI DESIGN HANDBOOK, PRECAST AND PRESTRESSED CONCRETE, FIFTH EDITION WITH ALL INTERIMS AND ERRATA (NO CRACKING CRITERIA).

FOR TOP SURFACE OF BULB TEE AND POST TENSIONED BULB TEE, USE A ROUGHENED SURFACE (1/4" AMPLITUDE). FOR DECK BULB TEE USE A HEAVY BROOM FINISH ON RIDING SURFACE OF TOP FLANGE.

DECK BULB TEES HAVE A 1/4" CONCRETE GRINDING ALLOWANCE FOR CORRECTING UNEVEN ROADWAY SURFACES AT LONGITUDINAL JOINTS. LOSS OF 1/4" OF TOP FLANGE TO BE ACCOUNTED FOR IN DESIGN.

APPLY CONCRETE POLYMER OVERLAY ON BRIDGE DECK AFTER CONCRETE GRINDING OR STEEL SHOT IS COMPLETE. SEE SECTION 03372 IN THE STANDARD SPECIFICATIONS FOR SURFACE PREPARATION REQUIREMENTS.

COAT ALL MILD REINFORCEMENT PER UDOT SPECIFICATIONS UNLESS OTHERWISE NOTED.

INDEX OF SHEETS

GNBT-1	BULB TEE GIRDER GENERAL NOTES
BT-1	PRECAST BULB TEE GIRDER STANDARD BEAM SIZES
BT-2	PRECAST DECK BULB TEE GIRDER STANDARD BEAM SIZES
BT-3	PRECAST POST-TENSIONED BULB TEE GIRDER STANDARD BEAM SIZES
BT-4	PRECAST BULB TEE GIRDER DIAPHRAGM DETAILS
BT-5	PRECAST DECK BULB TEE GIRDER WELDED STUD OPTION
UBT42-(1,2)	PRECAST BULB TEE GIRDER UBT42 DETAILS
UBT50-(1,2)	PRECAST BULB TEE GIRDER UBT50 DETAILS
UBT58-(1,2)	PRECAST BULB TEE GIRDER UBT58 DETAILS
UBT66-(1,2)	PRECAST BULB TEE GIRDER UBT66 DETAILS
UBT74-(1,2)	PRECAST BULB TEE GIRDER UBT74 DETAILS
UBT82-(1,2)	PRECAST BULB TEE GIRDER UBT82 DETAILS
UBT90-(1,2)	PRECAST BULB TEE GIRDER UBT90 DETAILS
UBT98-(1,2)	PRECAST BULB TEE GIRDER UBT98 DETAILS
UDBT42-(1,2)	PRECAST DECK BULB TEE GIRDER UDBT42 DETAILS
UDBT50-(1,2)	PRECAST DECK BULB TEE GIRDER UDBT50 DETAILS
UDBT58-(1,2)	PRECAST DECK BULB TEE GIRDER UDBT58 DETAILS
UDBT66-(1,2)	PRECAST DECK BULB TEE GIRDER UDBT66 DETAILS
UDBT74-(1,2)	PRECAST DECK BULB TEE GIRDER UDBT74 DETAILS
UDBT82-(1,2)	PRECAST DECK BULB TEE GIRDER UDBT82 DETAILS
UDBT90-(1,2)	PRECAST DECK BULB TEE GIRDER UDBT90 DETAILS
UDBT98-(1,2)	PRECAST DECK BULB TEE GIRDER UDBT98 DETAILS
UBT66PT-(1-4)	PRECAST POST-TENSIONED BULB TEE GIRDER DETAILS
UBT74PT-(1-4)	PRECAST POST-TENSIONED BULB TEE GIRDER DETAILS
UBT82PT-(1-4)	PRECAST POST-TENSIONED BULB TEE GIRDER DETAILS
UBT90PT-(1-4)	PRECAST POST-TENSIONED BULB TEE GIRDER DETAILS
UBT98PT-(1-4)	PRECAST POST-TENSIONED BULB TEE GIRDER DETAILS

REVISIONS

NO.	DATE	BY	REMARKS

UTAH DEPARTMENT OF TRANSPORTATION
SALT LAKE CITY, UTAH
STRUCTURES DIVISION

DESIGN CHECK
DRAWN CHECK
QUANT. CHECK

APPROVAL RECOMM. DATE SENIOR DESIGN ENGR.
APPROVED FOR USE BY UDOT DATE UDOT BRIDGE ENGR.

TYPICAL DETAIL SHEET
BULB TEE GIRDER
GENERAL NOTES

PROJECT NUMBER

COUNTY

GNBT-1
DRG. NO.

SHT. OF

UBT GEN NOTES.dgn

4/30/2009

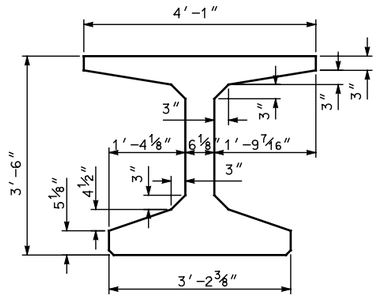

UBT42

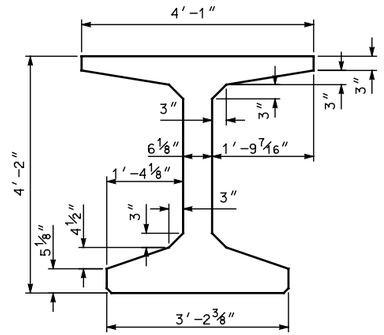

UBT50

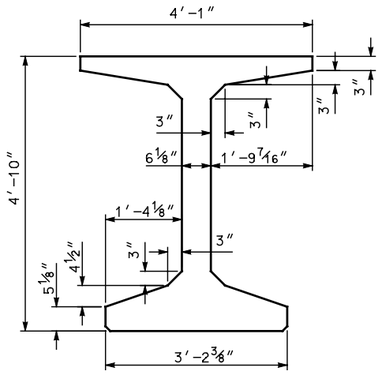

UBT58

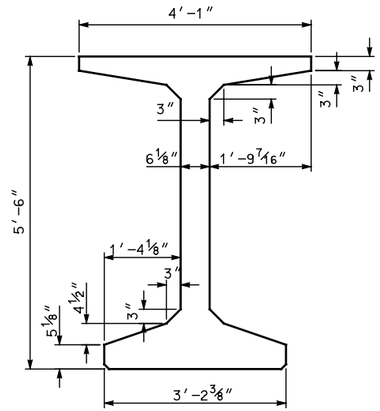

UBT66

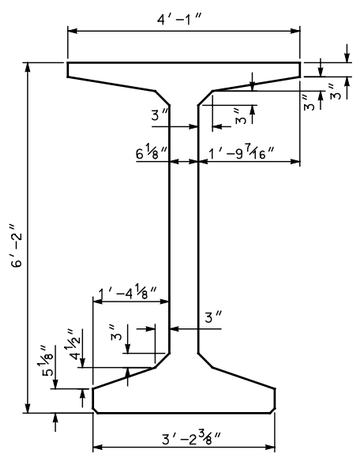

UBT74

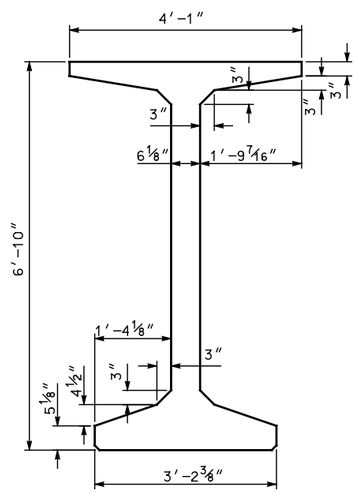

UBT82

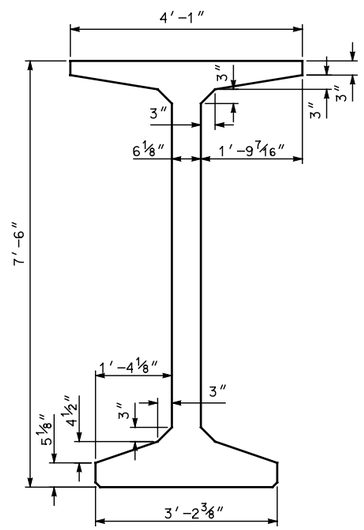

UBT90

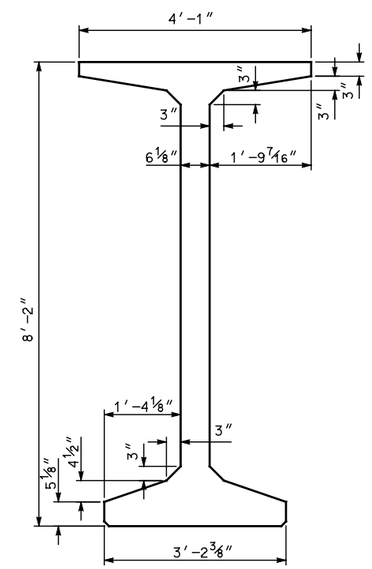

UBT98

BEAM TYPE	DEPTH (in)	WEIGHT (Lbs/Ft)	AREA (in^2)	Ix c.g. (in^4)	Iy c.g. (in^4)	Yt (in)	Yb (in)	St (in^3)	Sb (in^3)
UBT42	42	759	729	184042	71761	21.67	20.33	8494	9052
UBT50	50	810	778	283124	71914	25.88	24.12	10940	11738
UBT58	58	861	827	407026	72067	30.07	27.93	13538	14571
UBT66	66	912	876	557326	72221	34.23	31.77	16281	17544
UBT74	74	963	925	735599	72374	38.38	35.62	19166	20652
UBT82	82	1014	974	943421	72527	42.51	39.49	22191	23893
UBT90	90	1065	1023	1182360	72680	46.64	43.36	25353	27265
UBT98	98	1116	1072	1454000	72833	50.74	47.26	28653	30769

NO.	DATE	BY	REMARKS

REVISIONS

UTAH DEPARTMENT OF TRANSPORTATION
SALT LAKE CITY, UTAH
STRUCTURES DIVISION

DESIGN — CHECK
DRAWN — CHECK
QUANT. — CHECK

APPROVAL RECOMM. — DATE — SENIOR DESIGN ENGR.
APPROVED FOR USE BY UDOT — DATE — UDOT BRIDGE ENGR.

TYPICAL DETAIL SHEET
PRECAST BULB TEE GIRDER
STANDARD BEAM SIZES

PROJECT NUMBER

COUNTY

BT - 1
DRG. NO.

SHT. OF

UDOT standard girder sizes.dgn
4/30/2009

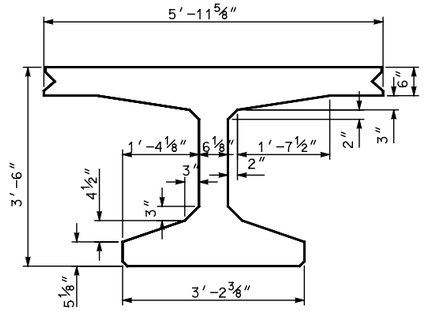

UDBT42

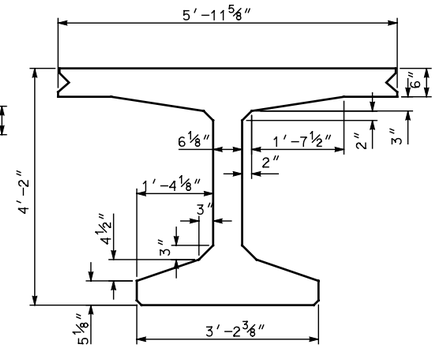

UDBT50

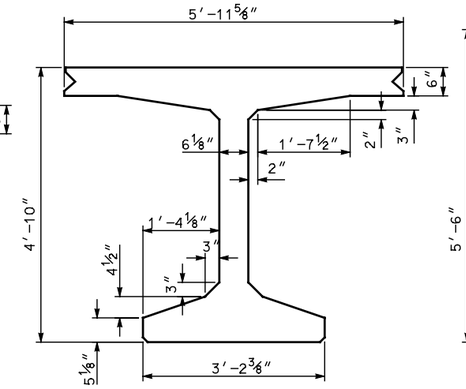

UDBT58

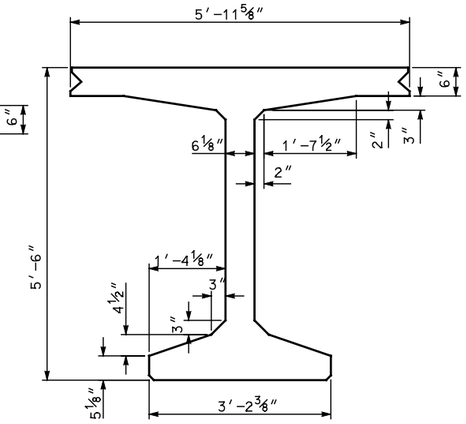

UDBT66

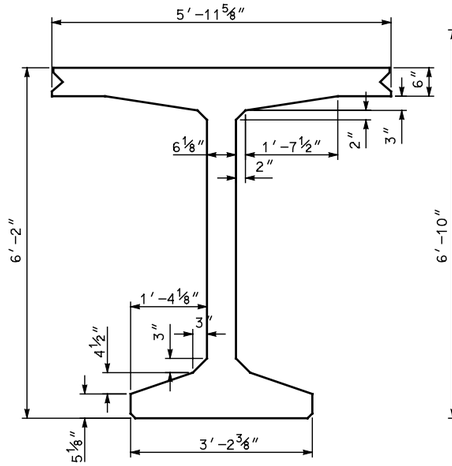

UDBT74

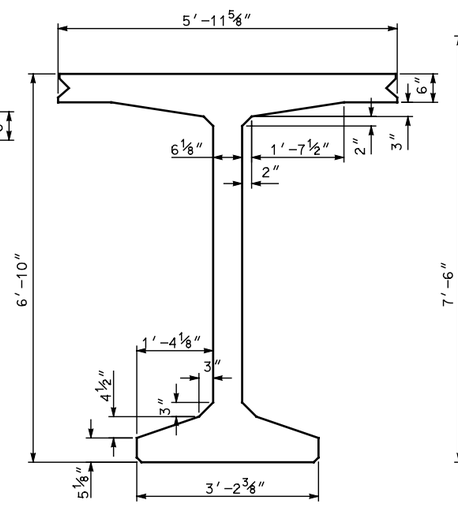

UDBT82

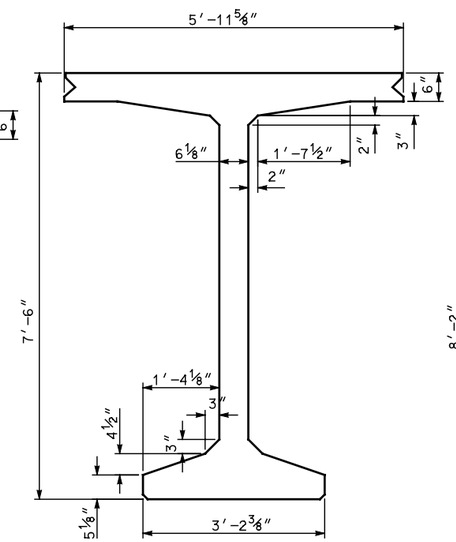

UDBT90

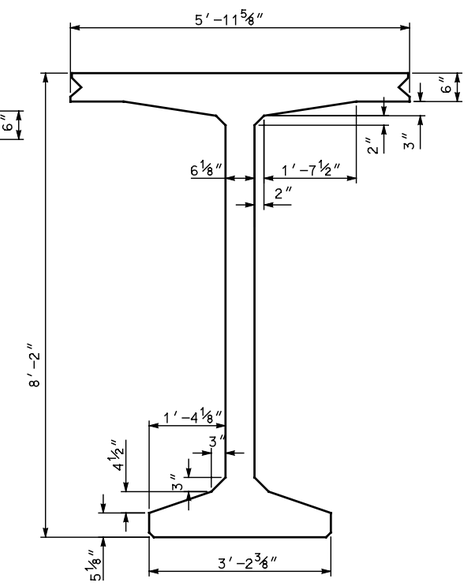

UDBT98

BEAM TYPE	DEPTH (in)	WEIGHT (Lbs/Ft)	AREA (in^2)	Ix c.g. (in^4)	Iy c.g. (in^4)	Yt (in)	Yb (in)	St (in^3)	Sb (in^3)
UDBT42	42	1022	981	235087	213276	17.57	24.43	13380	9623
UDBT50	50	1073	1030	363690	213429	21.00	29.00	17319	12541
UDBT58	58	1124	1079	524105	213582	24.49	33.51	21401	15640
UDBT66	66	1175	1128	717977	213735	28.02	37.98	25625	18903
UDBT74	74	1226	1177	946940	213889	31.59	42.41	29977	22327
UDBT82	82	1277	1226	1212620	214042	35.19	46.81	34456	25907
UDBT90	90	1328	1275	1516620	214195	38.83	51.17	39059	29638
UDBT98	98	1380	1324	1860550	214348	42.49	55.51	43786	33519

REVISIONS

NO.	DATE	BY	REMARKS

UTAH DEPARTMENT OF TRANSPORTATION
SALT LAKE CITY, UTAH
STRUCTURES DIVISION

DESIGN — CHECK
DRAWN — CHECK
QUANT. — CHECK

APPROVAL RECOMM. — DATE — SENIOR DESIGN ENGR.
APPROVED FOR USE BY UDOT — DATE — UDOT BRIDGE ENGR.

TYPICAL DETAIL SHEET
PRECAST DECK BULB TEE GIRDER
STANDARD BEAM SIZES

PROJECT NUMBER

COUNTY

BT - 2
DRG. NO.

SHT. OF

UDOT standard girder sizes.dgn

4/30/2009

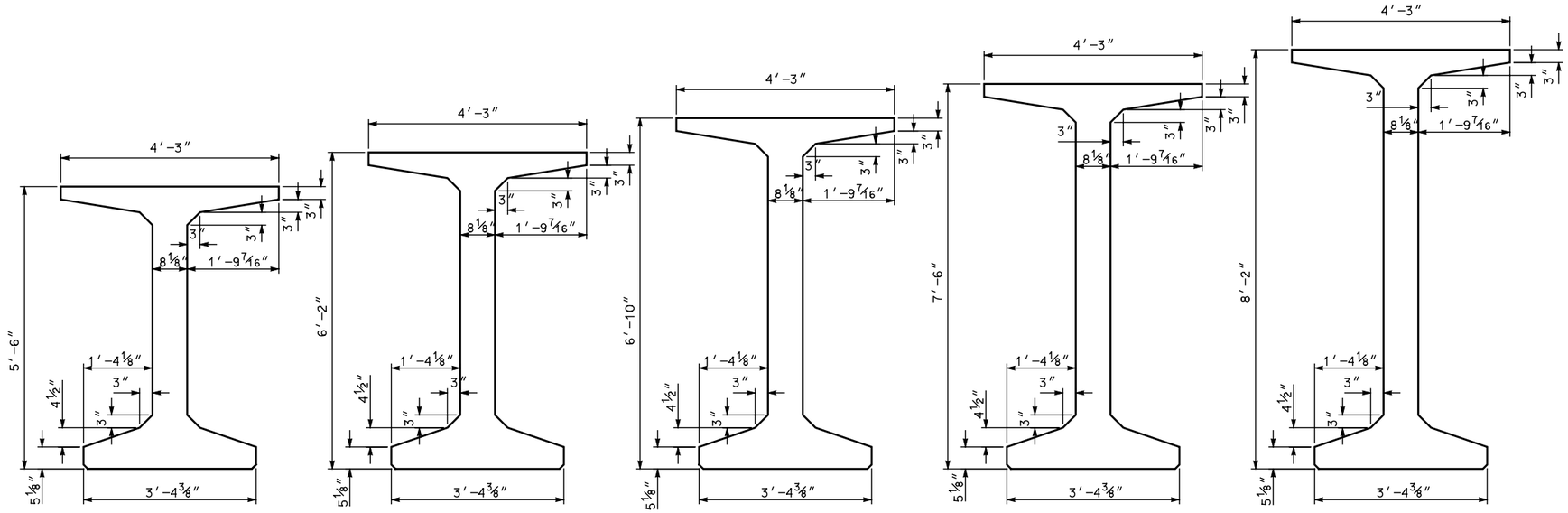

UBT 66-PT

UBT 74-PT

UBT 82-PT

UBT 90-PT

UBT 98-PT

BEAM TYPE	DEPTH (in)	WEIGHT (Lbs/Ft)	AREA (in^2)	Ix c.g. (in^4)	Iy c.g. (in^4)	Yt (in)	Yb (in)	St (in^3)	Sb (in^3)
UBT66-PT	66	1050	1008	605416	84741	34.07	31.93	17769	18961
UBT74-PT	74	1117	1073	803380	85099	38.19	35.81	21036	22435
UBT82-PT	82	1185	1138	1035640	85456	42.30	39.70	24485	26084
UBT90-PT	90	1253	1203	1304270	85814	46.39	43.61	28115	29908
UBT98-PT	98	1320	1268	1611370	86171	50.48	47.53	31924	33906

NO.	DATE	BY	REMARKS

REVISIONS

UTAH DEPARTMENT OF TRANSPORTATION
SALT LAKE CITY, UTAH
STRUCTURES DIVISION

DESIGN CHECK
DRAWN CHECK
QUANT. CHECK

APPROVAL RECOMM. DATE SENIOR DESIGN ENGR.
APPROVED FOR USE BY UDOT DATE UDOT BRIDGE ENGR.

TYPICAL DETAIL SHEET
PRECAST POST-TENSIONED BULB TEE GIRDER
STANDARD BEAM SIZES

PROJECT NUMBER

COUNTY

BT - 3
DRG. NO.

SHT. OF

UDOT standard girder sizes.dgn

4/30/2009

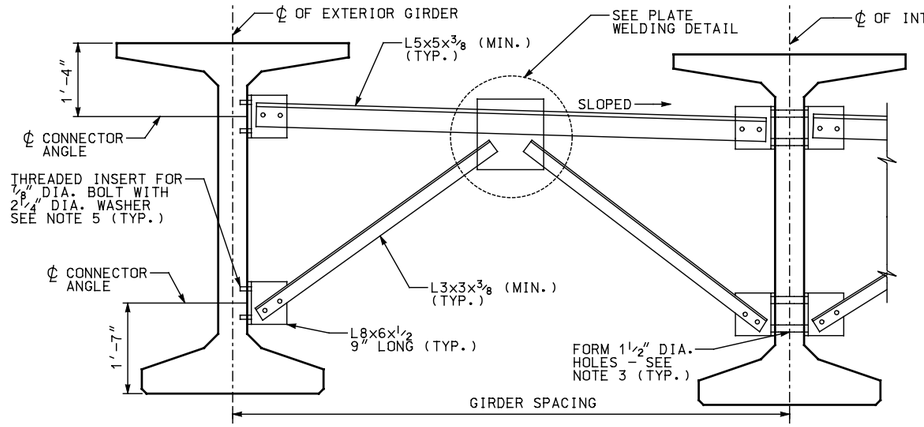

INTERMEDIATE DIAPHRAGM - TYPE II

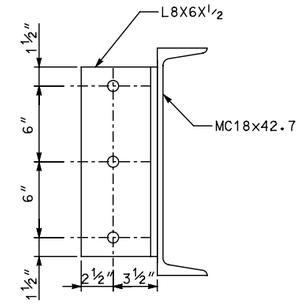

SECTION A: INTERMEDIATE DIAPHRAGM

NOTE: CHANNEL SHOWN, K-FRAME DIAPHRAGM SIMILAR.

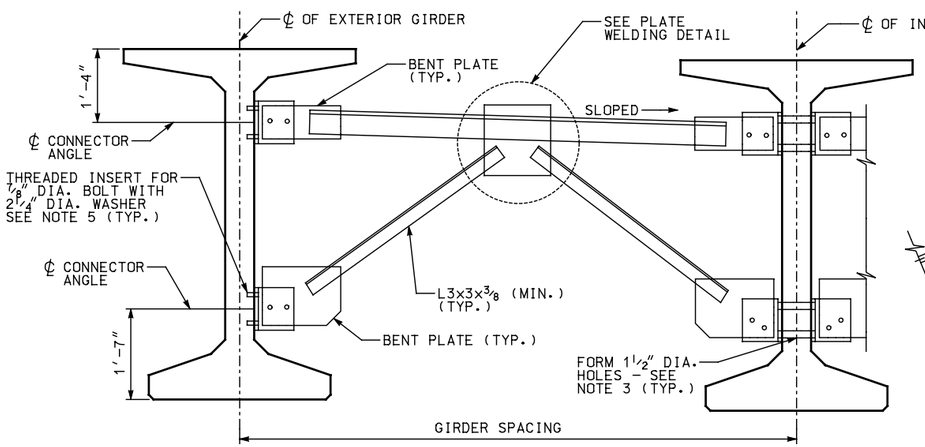

SKEWED INTERMEDIATE DIAPHRAGM - TYPE II

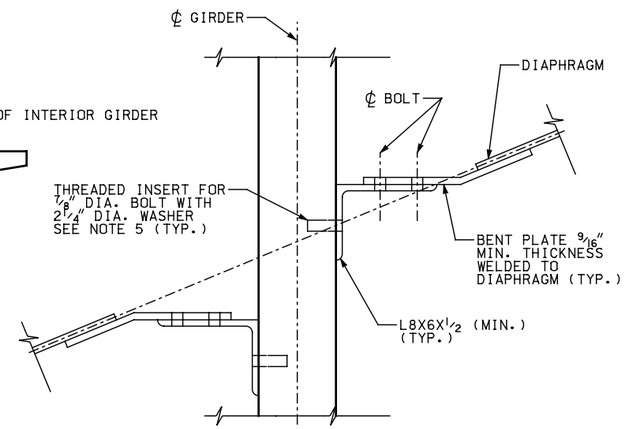

SECTION B: INTERMEDIATE DIAPHRAGM

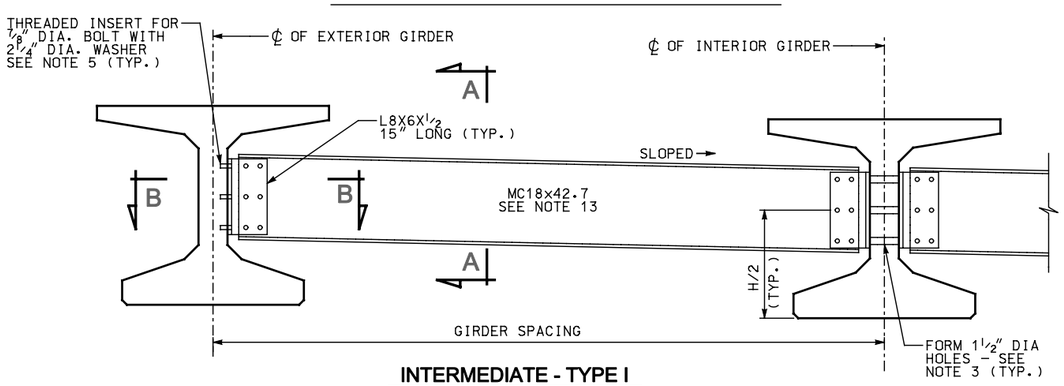

INTERMEDIATE - TYPE I

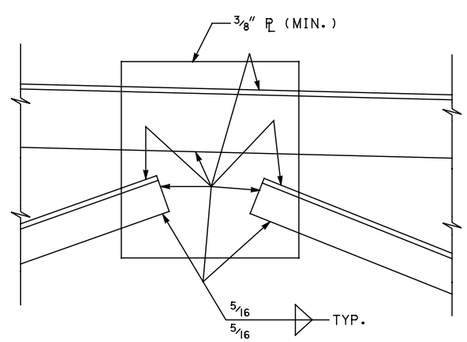

PLATE WELDING DETAIL

NOTE: STOP WELDS 1/4" SHORT OF ALL PLATE ELEMENTS

DIAPHRAGM CONNECTIONS TO BE LOCATED ON THE GIRDER WEB. DESIGNER SHALL VERIFY THREAD INSERT CAPACITIES SPECIFIED AND MODIFY THEM WHERE APPLICABLE.

THE BENT PL SHOWN IN SECTION B IS NOT NECESSARY FOR 0° SKEWS.

NOTES

1. INCLUDE ALL STEEL FOR DIAPHRAGMS IN THE COST OF THE PRESTRESSED CONCRETE GIRDER.
2. ALL STEEL TO BE ASTM A709 GRADE 50 AND GALVANIZED IN IN ACCORDANCE WITH ASTM A 123.
3. FABRICATE INTERMEDIATE AND END DIAPHRAGMS FABRICATED WITH ENDS PERPENDICULAR TO THE GIRDER FLANGES.
4. STEEL TO STEEL CONNECTIONS TO BE MADE USING 7/8" DIA. GALVANIZED HIGH-STRENGTH BOLTS.
5. STEEL TO CONCRETE CONNECTIONS TO BE MADE USING ASTM A307 GRADE A BOLTS.
6. WASHERS TO BE ASTM F436. ALL BOLTS, NUTS, AND WASHERS TO BE GALVANIZED IN ACCORDANCE WITH ASTM A 153.
7. FIELD DRILLED HOLES IN DIAPHRAGM CONNECTION ANGLES TO BE PERMITTED AT NO ADDITIONAL EXPENSE. ALL OTHER HOLES TO BE SHOP DRILLED.
8. 1/2" BENT PLATE OF EQUAL DIMENSIONS MAY BE SUBSTITUTED FOR MC18X42.7.
9. FOR SQUARE SUPERSTRUCTURES, FORM 1 1/2" DIA. HOLES IN INTERIOR GIRDERS FOR THRU-BOLTING OF DIAPHRAGM ANGLE. FOR FASCIA GIRDERS AND SKEWED STRUCTURES, THREADED INSERTS ARE REQUIRED. PLACE HOLES AND THREADED INSERTS PERPENDICULAR TO GIRDER WEB.
10. GALVANIZE THREADED INSERTS IN GIRDERS IN ACCORDANCE WITH ASTM A 153.
11. CAST THREADED INSERTS FOR HIGH-STRENGTH BOLTS INTO GIRDERS. THE THREADED INSERTS TO PROVIDE A MINIMUM ULTIMATE TENSILE CAPACITY OF 11 KIPS. THREADED INSERTS TO BE:
    MEADOW BURKE HI-TENSILE
    LANCASTER MALLEABLE
    DAYTON-SUPERIOR F-62 FLARED THIN SLAB FERRULE INSERT
    APPROVED EQUAL
12. THREADED INSERTS TO BE POSITIONED TO AVOID INTERFERENCE WITH THE PRESTRESSING STRANDS.

INTERMEDIATE DIAPHRAGM SIZING TABLE

GIRDER DEPTH	DIAPHRAGM	CHANNEL SIZE (SEE NOTE 11)
42	TYPE I	MC18x42.7
50	TYPE I	MC18x42.7
58	TYPE I	MC18x42.7
66	TYPE II	N/A
74	TYPE II	N/A
82	TYPE II	N/A
90	TYPE II	N/A
98	TYPE II	N/A

INTERMEDIATE DIAPHRAGM LOCATION TABLE

SPAN LENGTH	DIAPHRAGM LOCATION ALONG GIRDER
< 80 FT	1/2 SPAN PTS.
80 FT TO 120 FT	1/3 SPAN PTS.
120 FT TO 160 FT	1/4 SPAN PTS.
> 160 FT	1/5 SPAN PTS.

NOTE TO DESIGNER:
INSERT SHEET AS NEEDED INTO DESIGN DRAWINGS AND NUMBER AS FOLLOWS:
UBTXX-X, UDBTXX-X, OR UBTXXPT-X

NO.	DATE	BY	REMARKS

REVISIONS

UTAH DEPARTMENT OF TRANSPORTATION
SALT LAKE CITY, UTAH
STRUCTURES DIVISION

DESIGN CHECK
DRAWN CHECK
QUANT. CHECK

APPROVAL RECOMM. DATE SENIOR DESIGN ENGR.
APPROVED FOR PUBLIC BY UDOT DATE UDOT BRIDGE ENGR.

TYPICAL DETAIL SHEET
PRECAST BULB TEE GIRDER
DIAPHRAGM DETAILS

PROJECT NUMBER

COUNTY

BT - 4
DRG. NO.

SHT. OF

UBT Diaph G4.dgn
4/30/2009

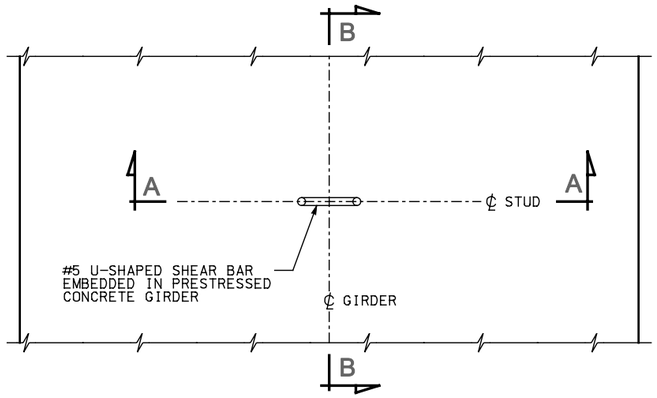

U-SHAPED SHEAR BAR PLAN ON BULB TEE GIRDER

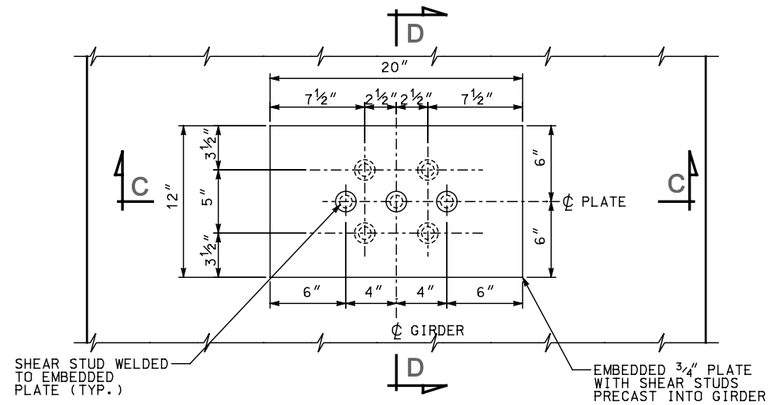

OPTIONAL SHEAR STUD PLAN ON BULB TEE GIRDER

NOTE: ONE ROW OF STUDS SHOWN ON TOP.
MULTIPLE ROWS MAY BE USED.

NOTES

1. DETAILS DRAWN FOR 1″ DIA. SHEAR STUDS.
2. CONTRACTOR TO DETERMINE METHOD FOR ACHIEVING WELDING GROUND FOR ATTACHMENT OF SHEAR STUDS. A WELDED GROUND LUG IS ACCEPTABLE PROVIDED THERE IS NO INTERFERENCE WITH PLACEMENT OF STUDS OR PLACEMENT OF PRECAST PANEL.
3. FORM CAMBER STRIP AND FILL WITH NON-SHRINK GROUT. METHOD OF FORMING CAMBER STRIP TO BE DETERMINED BY THE CONTRACTOR. REMOVE FORMS AFTER NON-SHRINK GROUT OBTAINS A COMPRESSIVE STRENGTH OF 3000 PSI.
4. FOR BLOCKOUT IN PRECAST PANELS SEE OPTIONS IN PRECAST PANEL DRAWINGS.

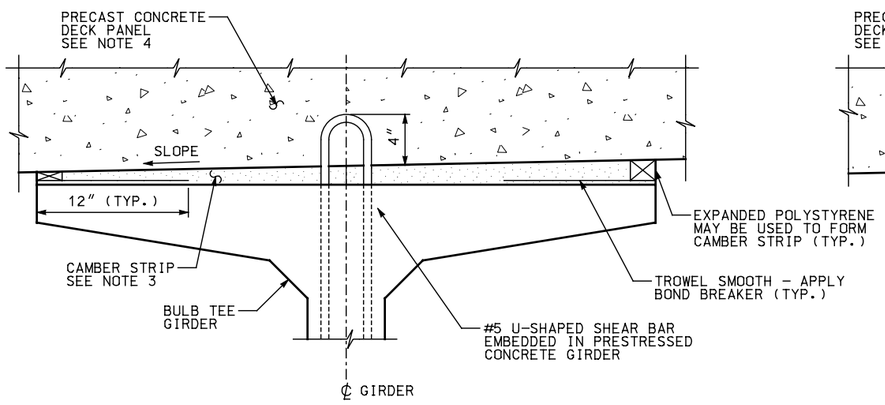

SECTION A: U-SHAPED SHEAR BAR

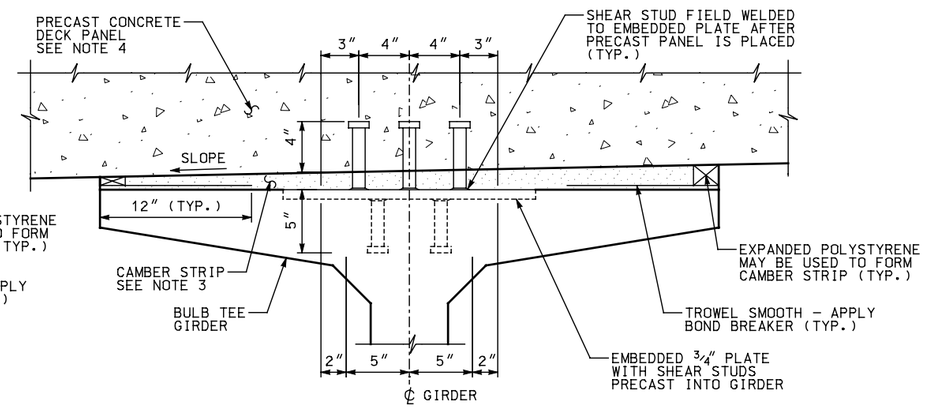

SECTION C: OPTIONAL SHEAR STUDS

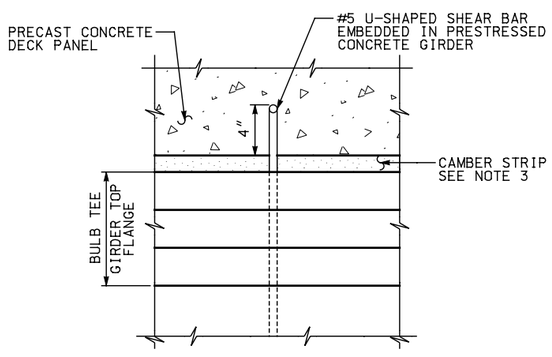

SECTION B: U-SHAPED SHEAR BAR

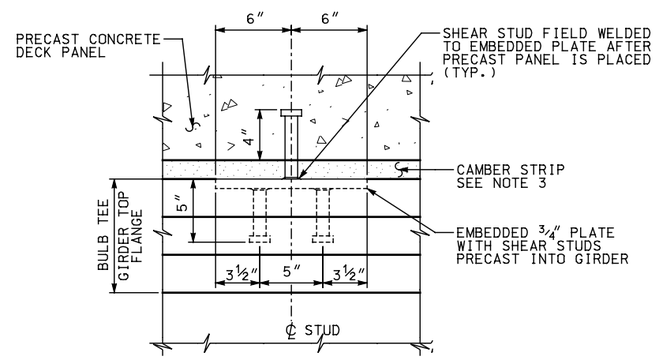

SECTION: OPTIONAL SHEAR STUDS

NOTE: ONE ROW OF STUDS SHOWN ON TOP.
MULTIPLE ROWS MAY BE USED.

NOTE TO DESIGNER:
INSERT SHEET AS NEEDED INTO DESIGN DRAWINGS AND NUMBER AS FOLLOWS:
UBTXX-X, UDBTXX-X, OR UBTXXPT-X

NO.	DATE	BY	REMARKS

REVISIONS

UTAH DEPARTMENT OF TRANSPORTATION
SALT LAKE CITY, UTAH
STRUCTURES DIVISION

DESIGN — CHECK
DRAWN — CHECK
QUANT. — CHECK

APPROVAL RECOMM. — DATE — SENIOR DESIGN ENGR.
APPROVED FOR ISSUE BY UDOT — DATE — UDOT BRIDGE ENGR.

TYPICAL DETAIL SHEET
PRECAST DECKS ON BULB TEE
GIRDER WELDED STUD OPTION

PROJECT NUMBER

COUNTY

BT - 5
DRG. NO.

SHT. OF

UBT welded stud details.dgn
4/20/2009