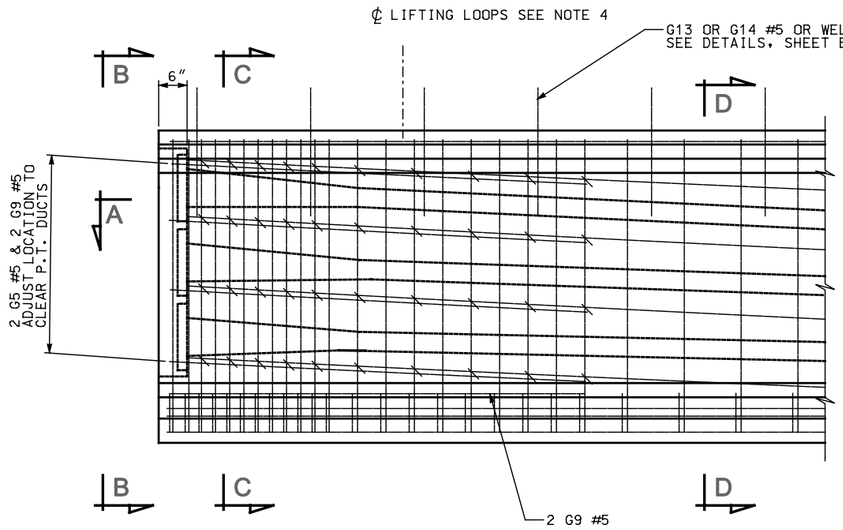

1 TYPICAL ELEVATION AT END SEGMENT

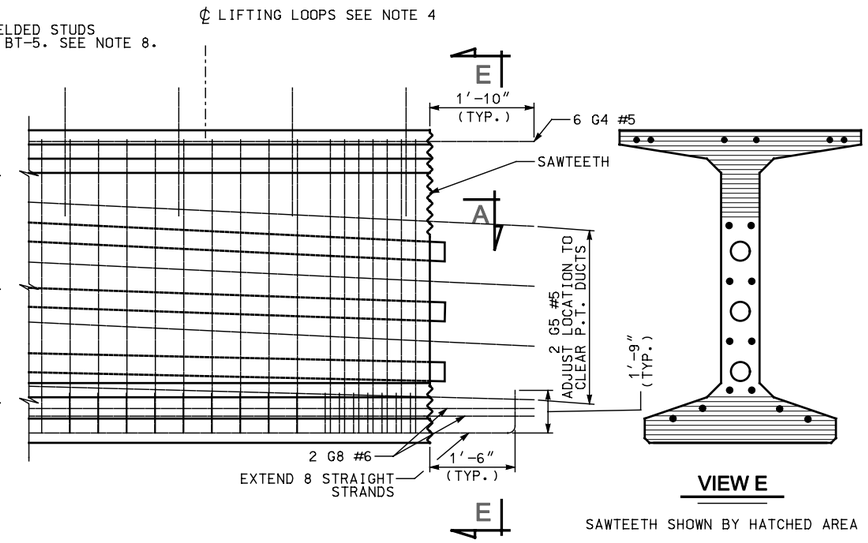

2 TYPICAL ELEVATION AT CLOSURE

PRE-TENSIONING NOTES

1. INCREASE PLAN LENGTH AS NECESSARY TO COMPENSATE FOR SHORTENING DUE TO PRESTRESS AND SHRINKAGE.
2. ALL PRETENSIONED AND TEMPORARY STRANDS TO BE [0.6″ DIA.] LOW RELAXATION STRANDS (AASHTO M203 GRADE 270.)
3. FOR GIRDER ENDS CUT ALL STRANDS 1″ BELOW CONCRETE SURFACE AND GROUT WITH AN APPROVED EPOXY GROUT.
4. CONTRACTOR TO DESIGN AND INSTALL LIFTING EMBEDMENTS IN ACCORDANCE WITH THE STANDARD SPECIFICATIONS.
5. CAUTION TO BE EXERCISED IN HANDLING AND PLACING GIRDERS. ALL GIRDERS TO BE CHECKED BY THE CONTRACTOR TO ENSURE THAT THEY ARE BRACED ADEQUATELY TO PREVENT TIPPING AND TO CONTROL LATERAL BENDING DURING SHIPPING. ONCE ERECTED, ALL GIRDERS TO BE BRACED LATERALLY TO PREVENT TIPPING UNTIL THE DIAPHRAGMS HAVE BEEN INSTALLED.
6. FOR DIAPHRAGM NOTES SEE SHEET BT-4.
7. SEE FRAMING PLAN FOR DIAPHRAGM LOCATIONS AND SEE DIAPHRAGM DETAILS FOR CONNECTION REQUIREMENTS.
8. DESIGN SLAB STIRRUPS BASED ON DECK AND SHEAR CONNECTOR SELECTED.

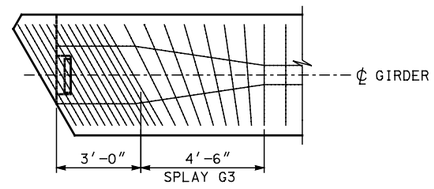

3 TRANSVERSE REINFORCING AT SKEWED ENDS - TOP

ONLY TRANSVERSE REINFORCING SHOWN

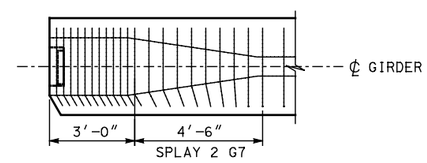

4 TRANSVERSE REINFORCING AT SKEWED ENDS - BOTTOM

ONLY TRANSVERSE REINFORCING SHOWN

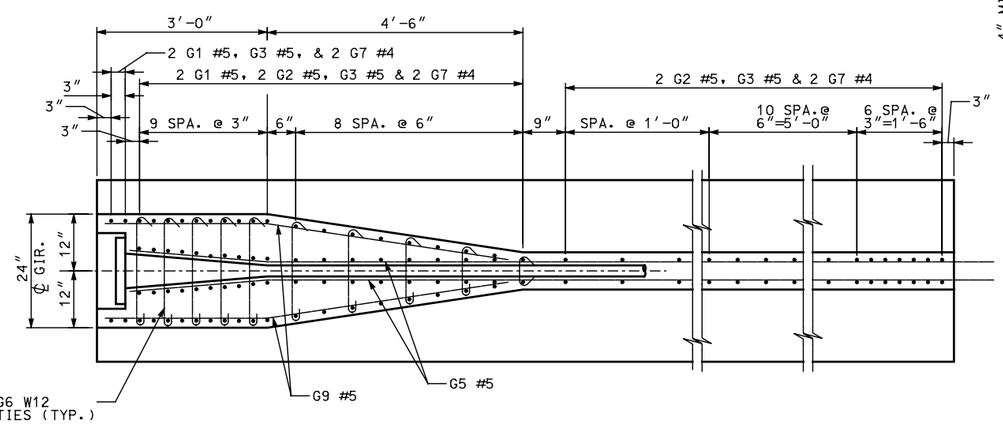

5 SECTION A

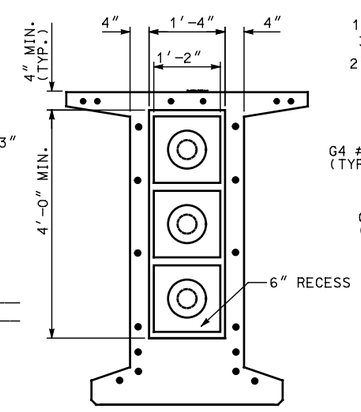

6 VIEW B

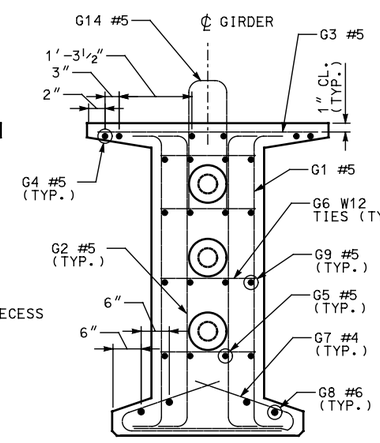

7 SECTION C

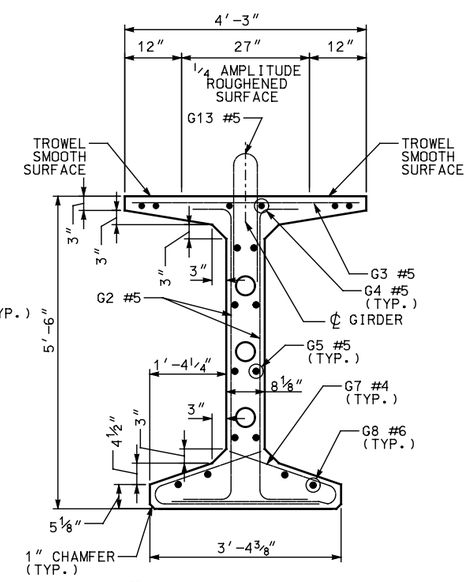

8 SECTION D

NO.	DATE	BY	REMARKS

REVISIONS

UTAH DEPARTMENT OF TRANSPORTATION
SALT LAKE CITY, UTAH
STRUCTURES DIVISION

DESIGN — CHECK
DRAWN — CHECK
QUANT. — CHECK

APPROVAL RECOMM. — DATE — SENIOR DESIGN ENGR.
APPROVED FOR USE BY UDOT — DATE — UDOT BRIDGE ENGR.

TYPICAL DETAIL SHEET
POST-TENSIONED BULB TEE GIRDER
UBT66PT GIRDER DETAILS 1

PROJECT NUMBER

COUNTY

UBT66PT - 1
DRG. NO.

SHT. OF

UBT66-PT_G1.dgn
4/30/2009

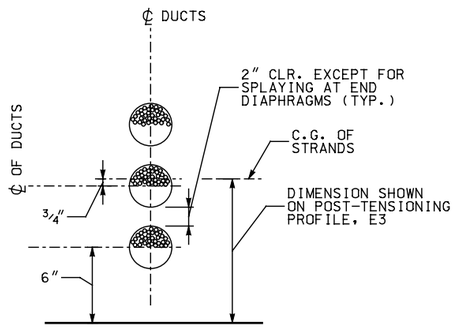

(11) **TENDON IN SAG CURVE STRAND LOCATION DETAIL**

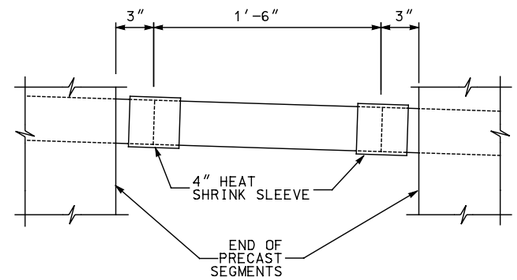

(12) **DUCT SPLICE DETAIL**

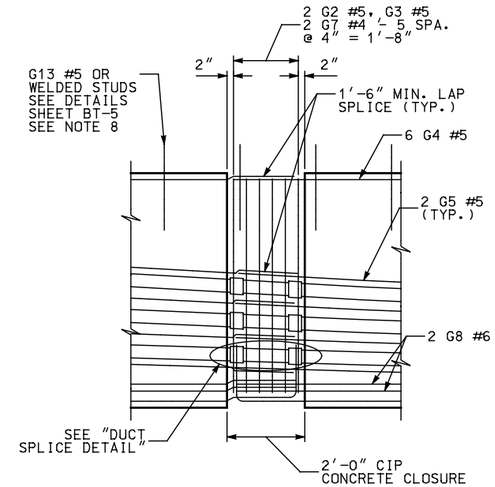

(10) **CLOSURE DETAIL**

NOTE: SQUARE ENDS OF GIRDER AT CLOSURE POUR

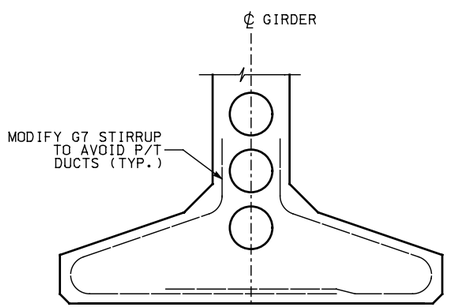

(13) **STIRRUP MODIFACTION AT P/T DUCT INTERFACE**

POST-TENSIONING TABLE

SPAN	GIRDER	MIN. CONC. COMPRESSIVE STRENGTH (KSI)		NUMBER OF STRANDS	PRESTRESSING LOAD (KIPS)		TOTAL PRESTRESS LOSS (KSI)		PRECAST LONGITUDINAL HALF-SECTION		
		GIRDER	CLOSURE		JACKING	AFTER SEATING	PRETENSIONING MID SEGMENT	P/T MID SEGMENT	E1 (IN.) (9)	E2 (IN.) (9)	E3 (IN.) (9)

POST-TENSIONING NOTES

1. SHOW THE MINIMUM COMPRESSIVE STRENGTH OF THE CAST-IN-PLACE CONCRETE AT THE CLOSURE AT THE TIME OF POST-TENSIONING IN THE POST-TENSIONING TABLE.
2. USE DUCT WITH A MAXIMUM OUTSIDE DIAMETER OF THE DUCT OF 4″ AND AN AREA OF AT LEAST 2.5 TIMES THE NET AREA OF THE PRESTRESSING STEEL IN THE DUCT.
3. THE DESIGN IS BASED ON THE FOLLOWING PARAMETERS:
   STRAND TYPE = 1/2″ DIA. OR 0.6″ DIA. LOW RELAXATION STRANDS
   ANCHOR SET = 3/8″
   CURVATURE FRICTION COEFFICIENT = 0.20
   WOBBLE FRICTION COEFFICIENT = 0.0002/FT
   SPECIFY THE ACTUAL ANCHOR SET AND JACKING FORCE USED ON THE SHOP PLANS AND INCLUDE THESE IN THE TRANSFER FORCE CALCULATIONS.
4. THE DESIGN IS BASED ON THE ESTIMATED PRESTRESS LOSS OF POST-TENSIONING STRANDS SHOWN IN THE POST-TENSIONING TABLE DUE TO STEEL RELAXATION, ELASTIC SHORTENING CREEP AND SHRINKAGE OF CONCRETE.
5. SUBMIT THE STRESSING SEQUENCE AND ELONGATION CALCULATIONS TO THE ENGINEER FOR APPROVAL. INCLUDE ALL LOSSES DUE TO TENDON VERTICAL AND HORIZONTAL CURVATURE IN ELONGATION CALCULATIONS. THE FOLLOWING CRITERIA SHOULD BE MET DURING THE STRESSING SEQUENCE:
   A. DISTRIBUTE THE PRESTRESSING FORCE WITH AN APPROXIMATELY EQUAL AMOUNT IN EACH WEB.
   B. PRESTRESS SYMMETRICALLY ABOUT THE CENTERLINE OF THE BRIDGE.
   C. STRESS NO MORE THAN ONE-HALF OF THE PRESTRESSING FORCE IN ANY WEB BEFORE AN EQUAL FORCE IS STRESSED IN THE ADJACENT WEBS. AT NO TIME DURING STRESSING OPERATION WILL MORE THAN 1/6 OF THE TOTAL PRESTRESSING FORCE BE APPLIED ECCENTRICALLY ABOUT THE CENTERLINE OF THE BRIDGE.
6. STRESS ALL TENDONS FROM ONE END.

NO.	DATE	BY	REMARKS

REVISIONS

UTAH DEPARTMENT OF TRANSPORTATION
SALT LAKE CITY, UTAH
STRUCTURES DIVISION

DESIGN — CHECK
DRAWN — CHECK
QUANT. — CHECK

APPROVAL RECOMM. — DATE — SENIOR DESIGN ENGR.
APPROVED FOR USE BY UDOT — DATE — UDOT BRIDGE ENGR.

TYPICAL DETAIL SHEET
POST-TENSIONED BULB TEE GIRDER
UBT66PT GIRDER DETAILS 2 & DESIGN WORKSHEET

PROJECT NUMBER

COUNTY

UBT66PT - 2
DRG. NO.

SHT. OF

UBT66-PT_G2.dgn
4/30/2009

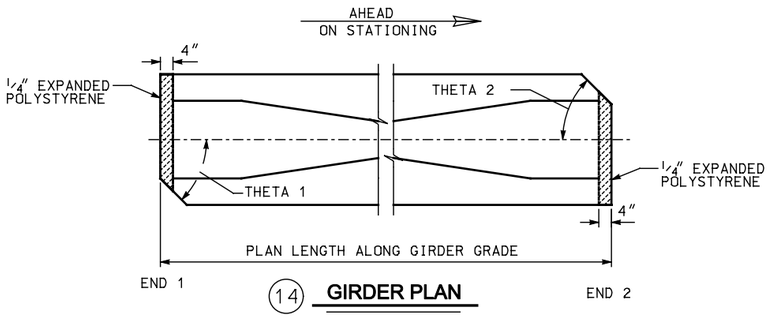

(14) **GIRDER PLAN**

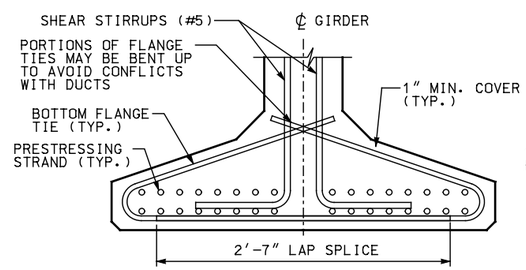

(15) **BOTTOM FLANGE REINFORCING IN MIDDLE SEGMENTS**

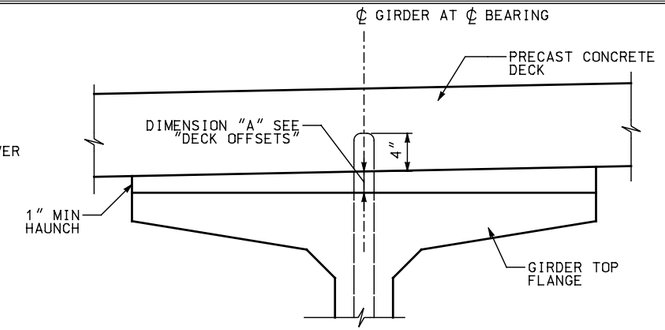

(20) **DECK ELEVATION**

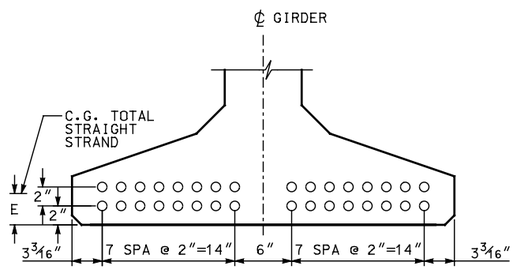

(17) **BOTTOM FLANGE STRAND PATTERN**

MID SEGMENT SHOWN, END SEGMENT SIMILAR

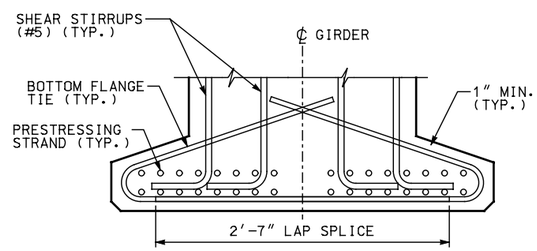

(16) **BOTTOM FLANGE REINFORCING AT ENDS OF END SEGMENTS**

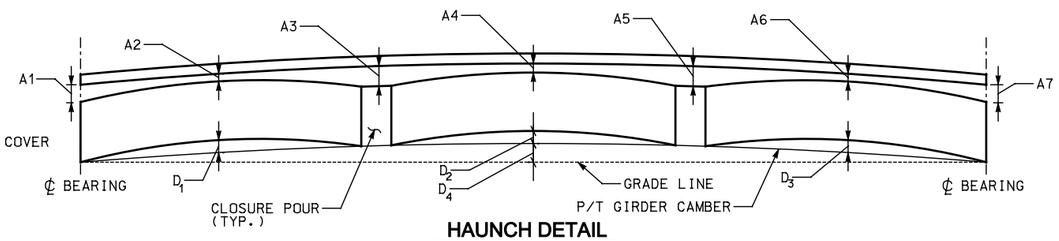

HAUNCH DETAIL

NOTE: 1. "A" DIMENSIONS BASED ON GIRDER DEFLECTIONS EQUAL TO "D40" AT TIME OF SLAB PLACEMENT (40 DAYS)

2. GIRDER CAMBER EXAGGERATED FOR CLARITY.

GIRDER SCHEDULE

SPAN	GIRDER	MINIMUM CONCRETE COMPR. STRENGTH				END SEGMENT 1					MID-SEGMENT					END SEGMENT 2					DECK OFFSETS						
							STRAIGHT		C.G. STRANDS (IN.)			STRAIGHT		C.G. STRANDS (IN.)			STRAIGHT		C.G. STRANDS (IN.)								
		F'CI (KSI)	F'C (KSI)	(14) THETA 1	(14) THETA 2	PLAN LENGTH (ALONG ℄ GIRDER GRADE)	NO. OF STRANDS	JACKING FORCE (LBS.)	E (17)	D1(40) (PRETENSIONING CAMBER)	PLAN LENGTH (ALONG ℄ GIRDER GRADE)	NO. OF STRANDS	JACKING FORCE (LBS)	E (17)	D2(40) (PRETENSIONING CAMBER)	PLAN LENGTH (ALONG ℄ GIRDER GRADE)	NO. OF STRANDS	JACKING FORCE (LBS)	E (17)	D3(40) (PRETENSIONING CAMBER)	D4(40) (POST-TENSIONING CAMBER)	A1	A2	A3	A4	A5	A6	A7

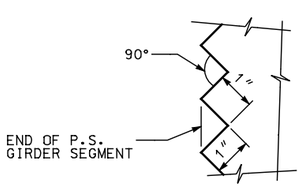

(18) **SAWTOOTH DETAILS**

SAWTEETH ARE FULL WIDTH - USE SAWTOOTH KEYS FROM BOTTOM OF BOTTOM FLANGE TO BOTTOM OF LOWEST HARPED STRAND AS WELL AS TOP FLANGE AND WEB ABOVE HARPED STRANDS AS SHOWN IN VIEW E - UBT66PT-1

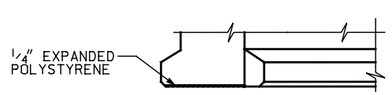

ELEVATION

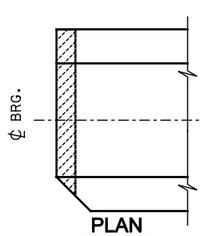

PLAN

(19) **BOTTOM FLANGE DETAILS ONLY AT CANTILEVER ABUTMENT**

MARK	LOCATION	SIZE	
G1	GIRDER END STIRRUPS	5	
G2	GIRDER STIRRUPS	5	
G3	GIRDER TOP FLANGE	5	STR.
G4	GIRDER LONGIT. FULL LENGTH	5	STR.
G5	GIRDER LONGIT.	5	STR.
G6	GIRDER END TIES	W12 **	
G7	GIRDER BOT. FLANGE TIES	1	
G8	GIRDER LONGIT.	6	STR.
G9	GIRDER LONGIT.	5	
G13	SLAB STIRRUP	5	
G14	SLAB STIRRUP	5	

NOTE: FOR DIMENSION "A", SEE "GIRDER SCHEDULE"

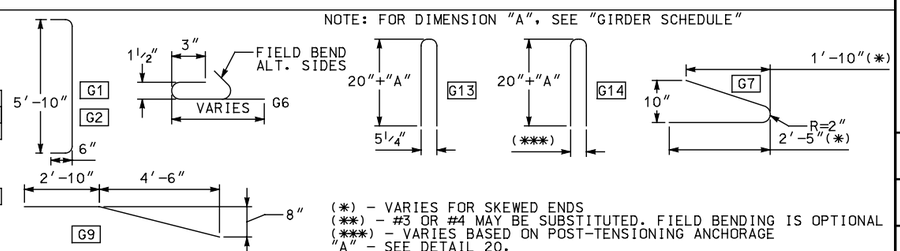

(*) - VARIES FOR SKEWED ENDS
(**) - #3 OR #4 MAY BE SUBSTITUTED. FIELD BENDING IS OPTIONAL
(***) - VARIES BASED ON POST-TENSIONING ANCHORAGE
"A" - SEE DETAIL 20.

NO.	DATE	BY	REMARKS

REVISIONS

UTAH DEPARTMENT OF TRANSPORTATION
SALT LAKE CITY, UTAH
STRUCTURES DIVISION

DESIGN — CHECK
DRAWN — CHECK
QUANT. — CHECK

APPROVAL RECOMM. — DATE — SENIOR DESIGN ENGR.
APPROVED FOR USE BY UDOT — DATE — UDOT BRIDGE ENGR.

TYPICAL DETAIL SHEET
POST-TENSIONED BULB TEE GIRDER
UBT66PT GIRDER DETAILS 3 & DESIGN DETAILS

PROJECT NUMBER

COUNTY

UBT66PT - 3
DRG. NO.

SHT. OF

UBT66-PT - G3.dgn

5/1/2009

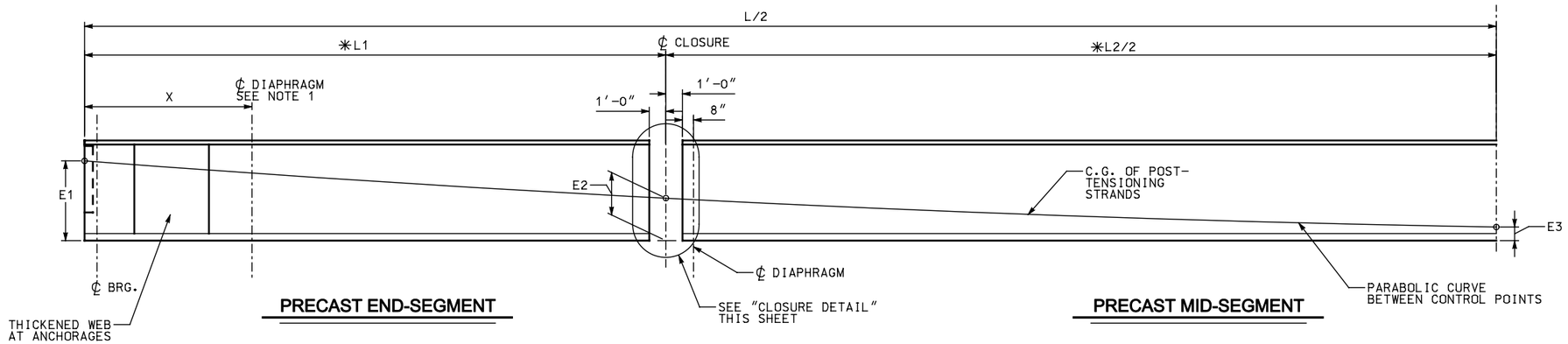

9 PRECAST LONGITUDINAL HALF-SECTION SHOWING POST-TENSIONING CABLE PATHS

✳ MEASURED BEFORE POST-TENSIONING

NOTE: 1. X = 10 FEET FOR INTEGRAL ABUTMENTS
X = NEAR BEAM END FOR CANTILEVER ABUTMENTS SEE FRAMING PLAN.

2. FOR OTHER DIAPHRAGM LOCATIONS SEE FRAMING PLAN.

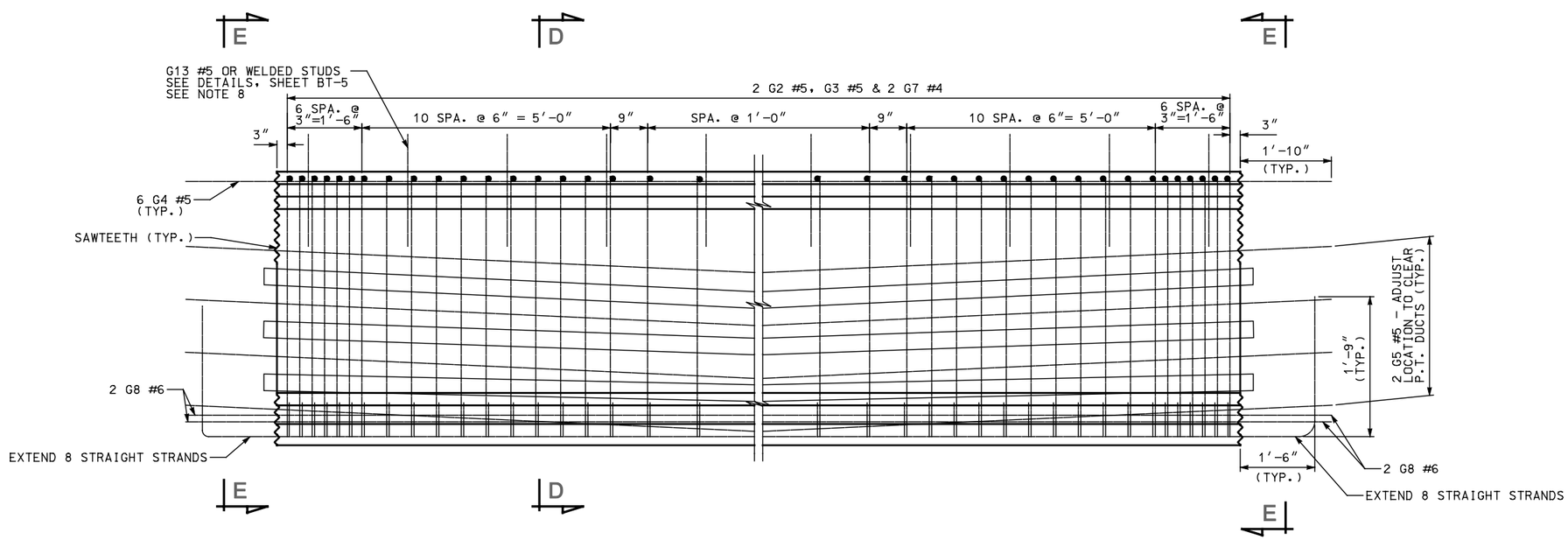

22 GIRDER ELEVATION MID-SEGMENT REINFORCING

NO.	DATE	BY	REMARKS

REVISIONS

UTAH DEPARTMENT OF TRANSPORTATION
SALT LAKE CITY, UTAH
STRUCTURES DIVISION

DESIGN ____ CHECK ____
DRAWN ____ CHECK ____
QUANT. ____ CHECK ____

APPROVAL RECOMM. ____ DATE ____ SENIOR DESIGN ENGR.
APPROVED FOR USE BY UDOT ____ DATE ____ UDOT BRIDGE ENGR.

TYPICAL DETAIL SHEET
POST-TENSIONED BULB TEE GIRDER
UBT66PT GIRDER DETAILS 4

PROJECT NUMBER

COUNTY

UBT66PT - 4
DRG. NO.

SHT. OF

UBT66-PT_G4.dgn
4/30/2009

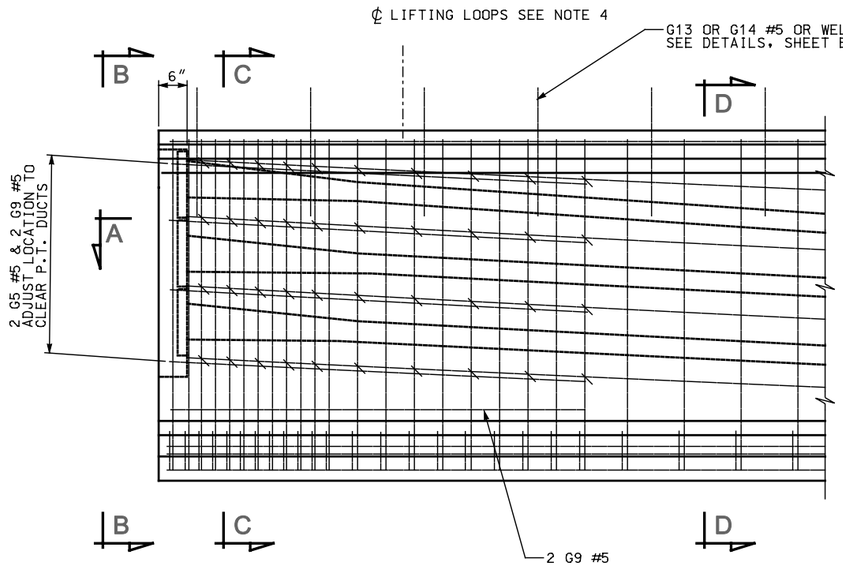

1 TYPICAL ELEVATION AT END SEGMENT

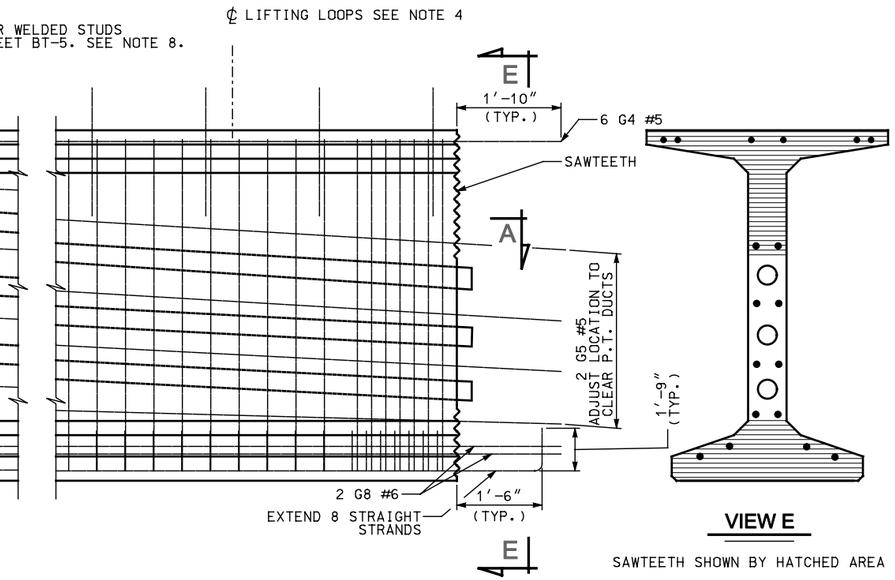

2 TYPICAL ELEVATION AT CLOSURE

PRE-TENSIONING NOTES

1. INCREASE PLAN LENGTH AS NECESSARY TO COMPENSATE FOR SHORTENING DUE TO PRESTRESS AND SHRINKAGE.
2. ALL PRETENSIONED AND TEMPORARY STRANDS TO BE [0.6″ DIA.] LOW RELAXATION STRANDS (AASHTO M203 GRADE 270.)
3. FOR GIRDER ENDS CUT ALL STRANDS 1″ BELOW CONCRETE SURFACE AND GROUT WITH AN APPROVED EPOXY GROUT.
4. CONTRACTOR TO DESIGN AND INSTALL LIFTING EMBEDMENTS IN ACCORDANCE WITH THE STANDARD SPECIFICATIONS.
5. CAUTION TO BE EXERCISED IN HANDLING AND PLACING GIRDERS. ALL GIRDERS TO BE CHECKED BY THE CONTRACTOR TO ENSURE THAT THEY ARE BRACED ADEQUATELY TO PREVENT TIPPING AND TO CONTROL LATERAL BENDING DURING SHIPPING. ONCE ERECTED, ALL GIRDERS TO BE BRACED LATERALLY TO PREVENT TIPPING UNTIL THE DIAPHRAGMS HAVE BEEN INSTALLED.
6. FOR DIAPHRAGM NOTES SEE SHEET BT-4.
7. SEE FRAMING PLAN FOR DIAPHRAGM LOCATIONS AND SEE DIAPHRAGN DETAILS FOR CONNECTION REQUIREMENTS.
8. DESIGN SLAB STIRRUPS BASED ON DECK AND SHEAR CONNECTOR SELECTED.

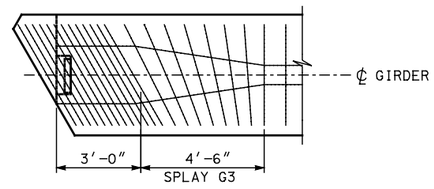

3 TRANSVERSE REINFORCING AT SKEWED ENDS - TOP

ONLY TRANSVERSE REINFORCING SHOWN

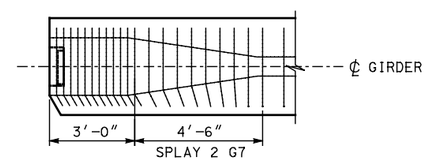

4 TRANSVERSE REINFORCING AT SKEWED ENDS - BOTTOM

ONLY TRANSVERSE REINFORCING SHOWN

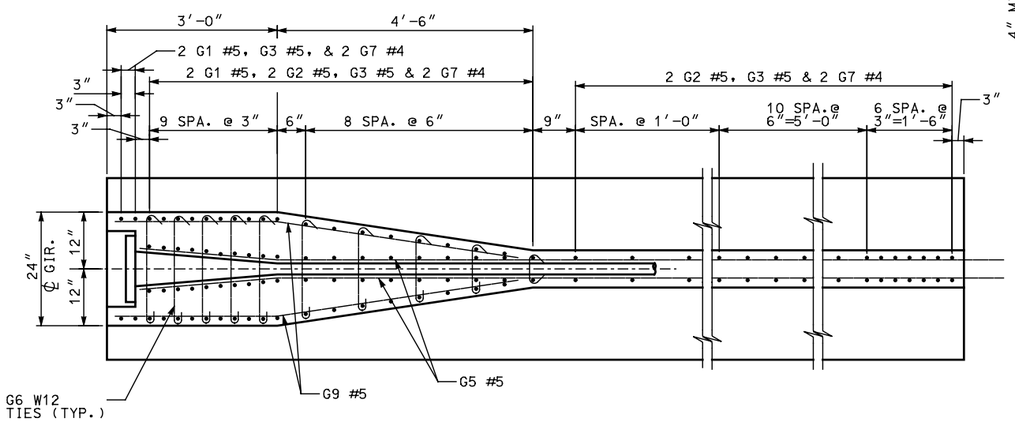

5 SECTION A

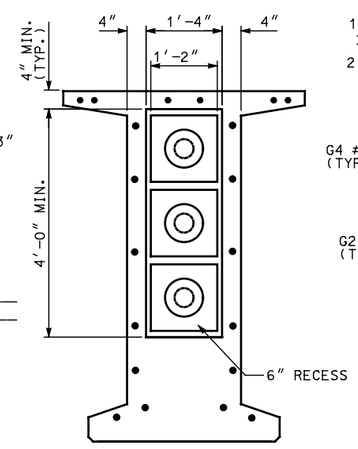

6 VIEW B

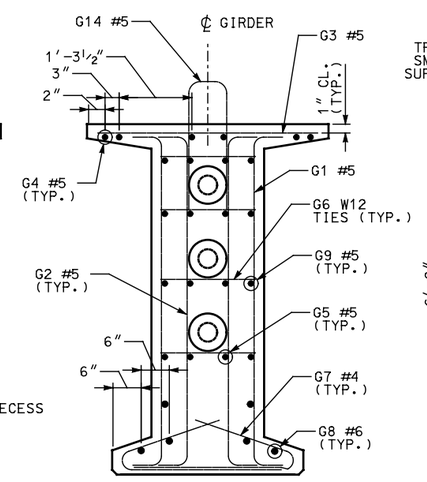

7 SECTION C

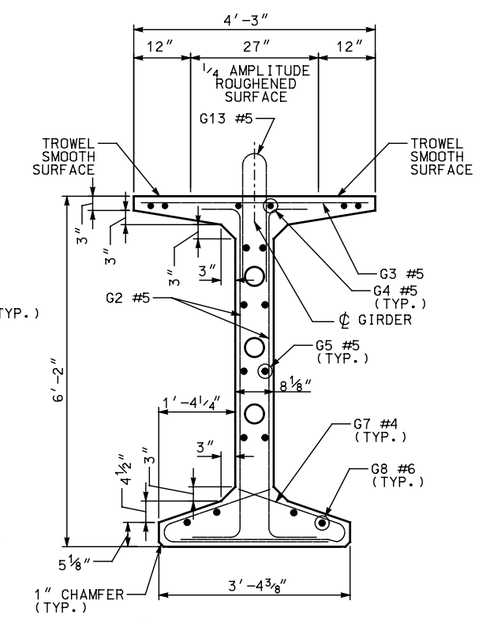

8 SECTION D

NO.	DATE	BY	REMARKS

REVISIONS

UTAH DEPARTMENT OF TRANSPORTATION
SALT LAKE CITY, UTAH
STRUCTURES DIVISION

DESIGN — CHECK
DRAWN — CHECK
QUANT. — CHECK

APPROVAL RECOMM. — DATE — SENIOR DESIGN ENGR.
APPROVED FOR USE BY UDOT — DATE — UDOT BRIDGE ENGR.

TYPICAL DETAIL SHEET
POST-TENSIONED BULB TEE GIRDER
UBT74PT GIRDER DETAILS 1

PROJECT NUMBER

COUNTY

UBT74PT - 1
DRG. NO.

SHT. OF

UBT74-PT_G1.dgn

4/30/2009

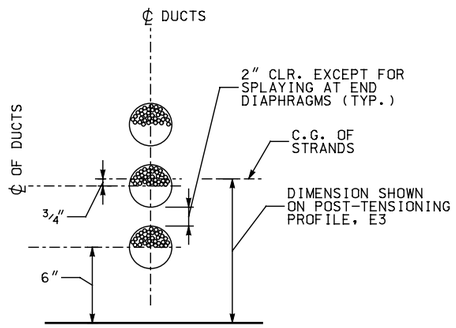

(11) **TENDON IN SAG CURVE STRAND LOCATION DETAIL**

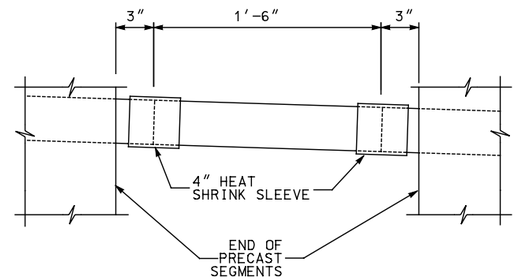

(12) **DUCT SPLICE DETAIL**

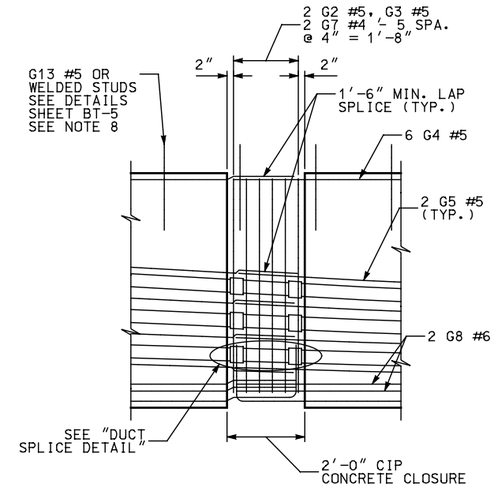

(10) **CLOSURE DETAIL**

NOTE: SQUARE ENDS OF GIRDER AT CLOSURE POUR

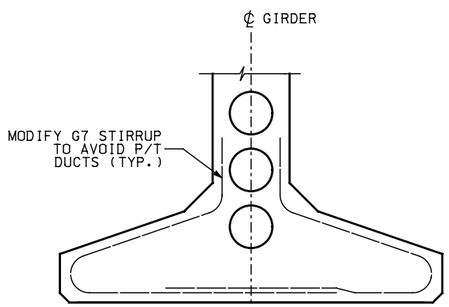

(13) **STIRRUP MODIFACTION AT P/T DUCT INTERFACE**

POST-TENSIONING TABLE

SPAN	GIRDER	MIN. CONC. COMPRESSIVE STRENGTH (KSI)		NUMBER OF STRANDS	PRESTRESSING LOAD (KIPS)		TOTAL PRESTRESS LOSS (KSI)		PRECAST LONGITUDINAL HALF-SECTION		
		GIRDER	CLOSURE		JACKING	AFTER SEATING	PRETENSIONING MID SEGMENT	P/T MID SEGMENT	E1 (IN.) (9)	E2 (IN.) (9)	E3 (IN.) (9)

POST-TENSIONING NOTES

1. SHOW THE MINIMUM COMPRESSIVE STRENGTH OF THE CAST-IN-PLACE CONCRETE AT THE CLOSURE AT THE TIME OF POST-TENSIONING IN THE POST-TENSIONING TABLE.
2. USE DUCT WITH A MAXIMUM OUTSIDE DIAMETER OF THE DUCT OF 4″ AND AN AREA OF AT LEAST 2.5 TIMES THE NET AREA OF THE PRESTRESSING STEEL IN THE DUCT.
3. THE DESIGN IS BASED ON THE FOLLOWING PARAMETERS:
   STRAND TYPE = 1/2″ DIA. OR 0.6″ DIA. LOW RELAXATION STRANDS
   ANCHOR SET = 3/8″
   CURVATURE FRICTION COEFFICIENT = 0.20
   WOBBLE FRICTION COEFFICIENT = 0.0002/FT
   SPECIFY THE ACTUAL ANCHOR SET AND JACKING FORCE USED ON THE SHOP PLANS AND INCLUDE THESE IN THE TRANSFER FORCE CALCULATIONS.
4. THE DESIGN IS BASED ON THE ESTIMATED PRESTRESS LOSS OF POST-TENSIONING STRANDS SHOWN IN THE POST-TENSIONING TABLE DUE TO STEEL RELAXATION, ELASTIC SHORTENING CREEP AND SHRINKAGE OF CONCRETE.
5. SUBMIT THE STRESSING SEQUENCE AND ELONGATION CALCULATIONS TO THE ENGINEER FOR APPROVAL. INCLUDE ALL LOSSES DUE TO TENDON VERTICAL AND HORIZONTAL CURVATURE IN ELONGATION CALCULATIONS. THE FOLLOWING CRITERIA SHOULD BE MET DURING THE STRESSING SEQUENCE:
   A. DISTRIBUTE THE PRESTRESSING FORCE WITH AN APPROXIMATELY EQUAL AMOUNT IN EACH WEB.
   B. PRESTRESS SYMMETRICALLY ABOUT THE CENTERLINE OF THE BRIDGE.
   C. STRESS NO MORE THAN ONE-HALF OF THE PRESTRESSING FORCE IN ANY WEB BEFORE AN EQUAL FORCE IS STRESSED IN THE ADJACENT WEBS. AT NO TIME DURING STRESSING OPERATION WILL MORE THAN 1/6 OF THE TOTAL PRESTRESSING FORCE BE APPLIED ECCENTRICALLY ABOUT THE CENTERLINE OF THE BRIDGE.
6. STRESS ALL TENDONS FROM ONE END.

NO.	DATE	BY	REMARKS

REVISIONS

UTAH DEPARTMENT OF TRANSPORTATION
SALT LAKE CITY, UTAH
STRUCTURES DIVISION

DESIGN — CHECK
DRAWN — CHECK
QUANT. — CHECK

APPROVAL RECOMM. — DATE — SENIOR DESIGN ENGR.
APPROVED FOR USE BY UDOT — DATE — UDOT BRIDGE ENGR.

TYPICAL DETAIL SHEET
POST-TENSIONED BULB TEE GIRDER
UBT74PT GIRDER DETAILS 2 & DESIGN WORKSHEET

PROJECT NUMBER

COUNTY

UBT74PT - 2
DRG. NO.

SHT. OF

UBT74-PT_02.dgn
4/30/2009

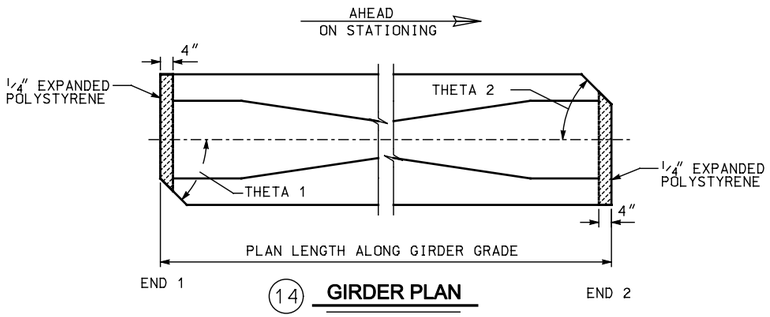

(14) **GIRDER PLAN**

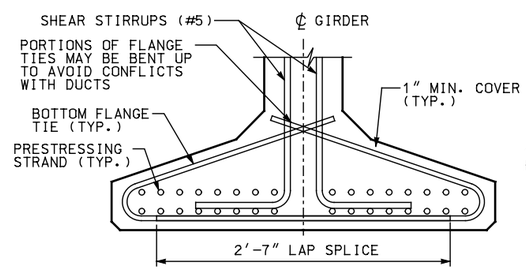

(15) **BOTTOM FLANGE REINFORCING IN MIDDLE SEGMENTS**

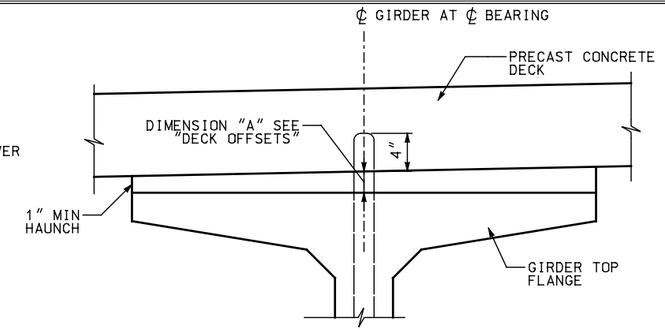

(20) **DECK ELEVATION**

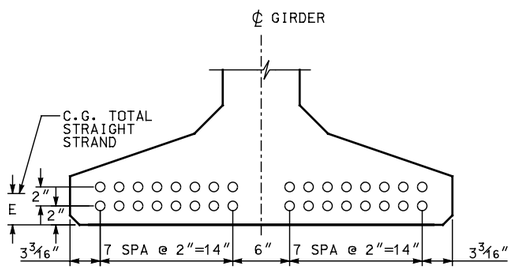

(17) **BOTTOM FLANGE STRAND PATTERN**

MID SEGMENT SHOWN, END SEGMENT SIMILAR

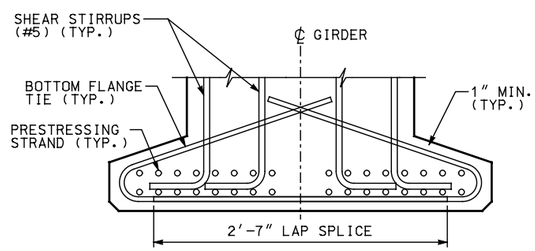

(16) **BOTTOM FLANGE REINFORCING AT ENDS OF END SEGMENTS**

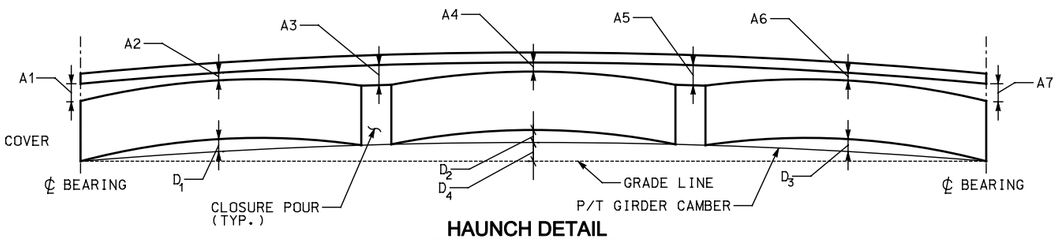

HAUNCH DETAIL

NOTE: 1. "A" DIMENSIONS BASED ON GIRDER DEFLECTIONS EQUAL TO "D40" AT TIME OF SLAB PLACEMENT (40 DAYS)

2. GIRDER CAMBER EXAGGERATED FOR CLARITY.

GIRDER SCHEDULE

SPAN	GIRDER	MINIMUM CONCRETE COMPR. STRENGTH				END SEGMENT 1					MID-SEGMENT					END SEGMENT 2					DECK OFFSETS						
							STRAIGHT		C.G. STRANDS (IN.)			STRAIGHT		C.G. STRANDS (IN.)			STRAIGHT		C.G. STRANDS (IN.)								
		F'CI (KSI)	F'C (KSI)	(14) THETA 1	(14) THETA 2	PLAN LENGTH (ALONG ℄ GIRDER GRADE)	NO. OF STRANDS	JACKING FORCE (LBS.)	E (17)	D1(40) (PRETENSIONING CAMBER)	PLAN LENGTH (ALONG ℄ GIRDER GRADE)	NO. OF STRANDS	JACKING FORCE (LBS)	E (17)	D2(40) (PRETENSIONING CAMBER)	PLAN LENGTH (ALONG ℄ GIRDER GRADE)	NO. OF STRANDS	JACKING FORCE (LBS)	E (17)	D3(40) (PRETENSIONING CAMBER)	D4(40) (POST-TENSIONING CAMBER)	A1	A2	A3	A4	A5	A6	A7

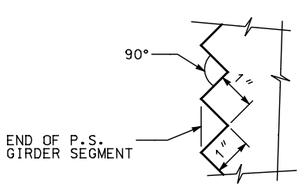

(18) **SAWTOOTH DETAILS**

SAWTEETH ARE FULL WIDTH - USE SAWTOOTH KEYS FROM BOTTOM OF BOTTOM FLANGE TO BOTTOM OF LOWEST HARPED STRAND AS WELL AS TOP FLANGE AND WEB ABOVE HARPED STRANDS AS SHOWN IN VIEW E - UBT74PT-1

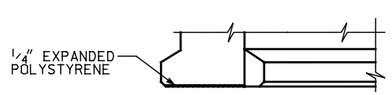

ELEVATION

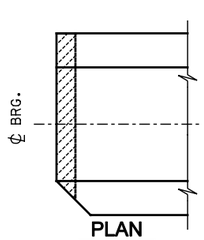

PLAN

(19) **BOTTOM FLANGE DETAILS ONLY AT CANTILEVER ABUTMENT**

MARK	LOCATION	SIZE	
G1	GIRDER END STIRRUPS	5	
G2	GIRDER STIRRUPS	5	
G3	GIRDER TOP FLANGE	5	STR.
G4	GIRDER LONGIT. FULL LENGTH	5	STR.
G5	GIRDER LONGIT.	5	STR.
G6	GIRDER END TIES	W12 **	
G7	GIRDER BOT. FLANGE TIES	1	
G8	GIRDER LONGIT.	6	STR.
G9	GIRDER LONGIT.	5	
G13	SLAB STIRRUP	5	
G14	SLAB STIRRUP	5	

NOTE: FOR DIMENSION "A", SEE "GIRDER SCHEDULE"

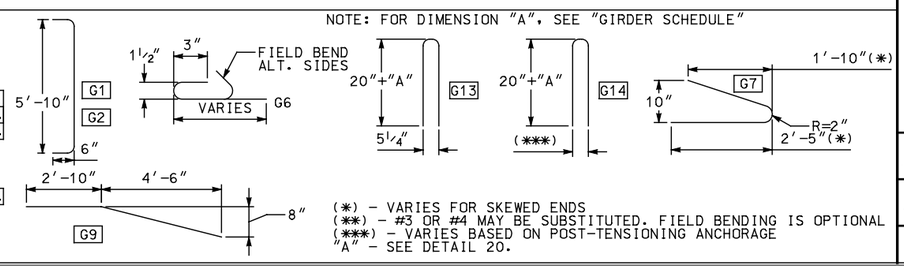

(*) - VARIES FOR SKEWED ENDS
(**) - #3 OR #4 MAY BE SUBSTITUTED. FIELD BENDING IS OPTIONAL
(***) - VARIES BASED ON POST-TENSIONING ANCHORAGE
"A" - SEE DETAIL 20.

REVISIONS

NO.	DATE	BY	REMARKS

UTAH DEPARTMENT OF TRANSPORTATION
SALT LAKE CITY, UTAH
STRUCTURES DIVISION

DESIGN — CHECK
DRAWN — CHECK
QUANT. — CHECK

APPROVAL RECOMM. — DATE — SENIOR DESIGN ENGR.
APPROVED FOR USE BY UDOT — DATE — UDOT BRIDGE ENGR.

TYPICAL DETAIL SHEET
POST-TENSIONED BULB TEE GIRDER
UBT74PT GIRDER DETAILS 3 & DESIGN DETAILS

PROJECT NUMBER

COUNTY
UBT74PT - 3
DRG. NO.
SHT. OF

UBT74-PT - G3.dgn
5/1/2009

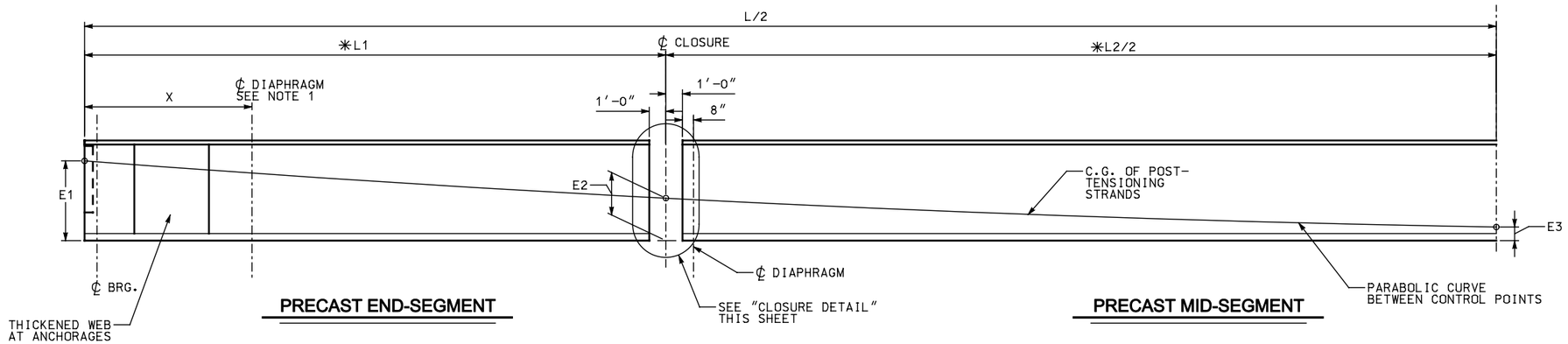

(9) PRECAST LONGITUDINAL HALF-SECTION SHOWING POST-TENSIONING CABLE PATHS

✳ MEASURED BEFORE POST-TENSIONING

NOTE: 1. X = 10 FEET FOR INTEGRAL ABUTMENTS
X = NEAR BEAM END FOR CANTILEVER ABUTMENTS SEE FRAMING PLAN.

2. FOR OTHER DIAPHRAGM LOCATIONS SEE FRAMING PLAN.

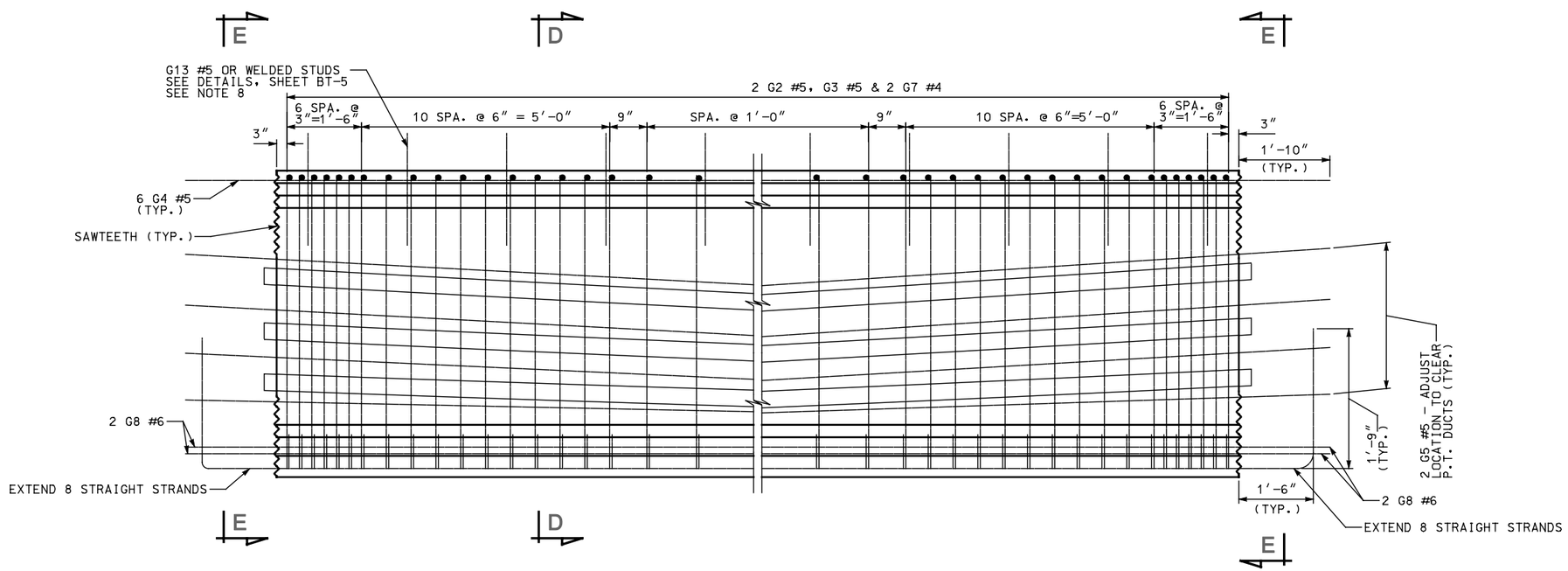

(22) GIRDER ELEVATION MID-SEGMENT REINFORCING

NO.	DATE	BY	REMARKS

REVISIONS

UTAH DEPARTMENT OF TRANSPORTATION
SALT LAKE CITY, UTAH
STRUCTURES DIVISION

DESIGN ____ CHECK ____
DRAWN ____ CHECK ____
QUANT. ____ CHECK ____

APPROVAL RECOMM. ____ DATE ____ SENIOR DESIGN ENGR.
APPROVED FOR USE BY UDOT ____ DATE ____ UDOT BRIDGE ENGR.

TYPICAL DETAIL SHEET
POST-TENSIONED BULB TEE GIRDER
UBT74PT GIRDER DETAILS 4

PROJECT NUMBER

COUNTY

UBT74PT - 4
DRG. NO.

SHT. OF

UBT74-PT_G4.dgn
4/30/2009

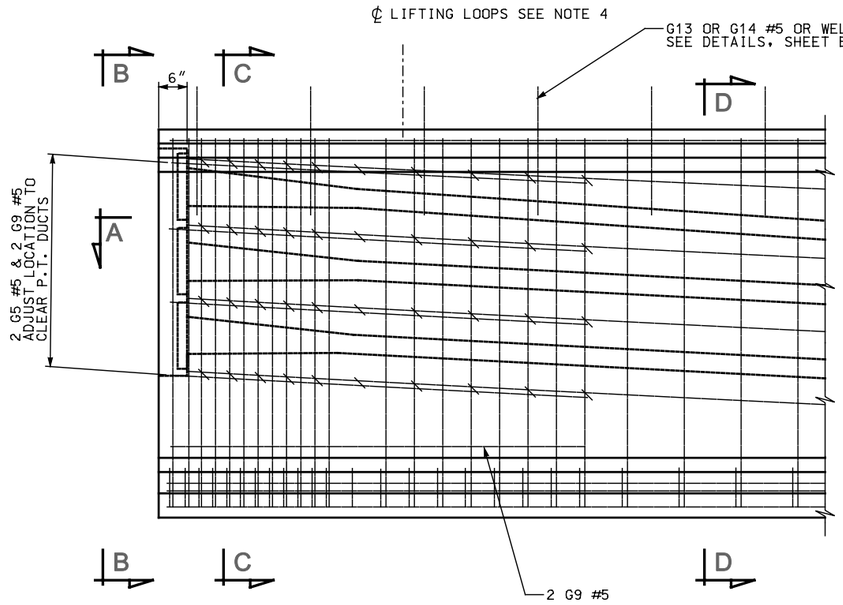

1 TYPICAL ELEVATION AT END SEGMENT

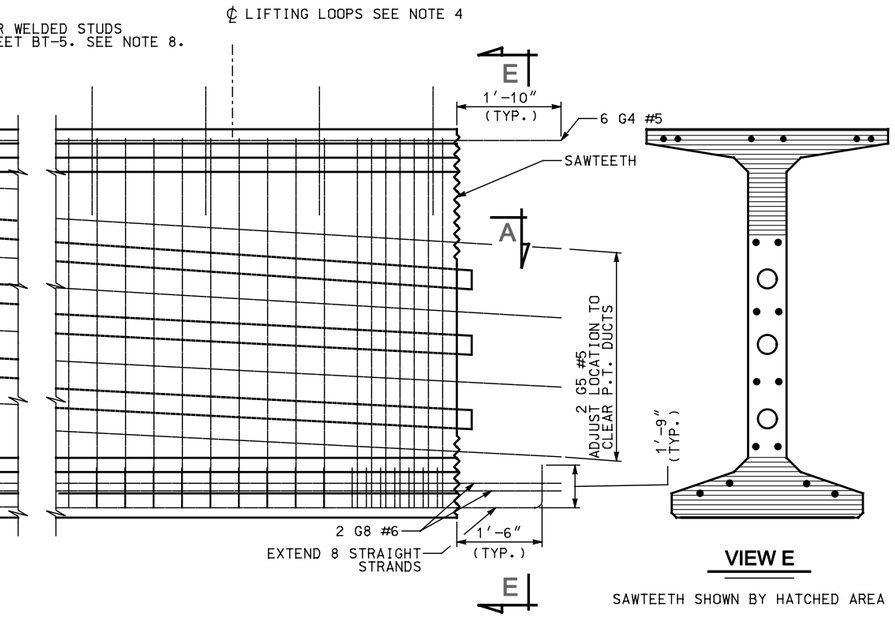

2 TYPICAL ELEVATION AT CLOSURE

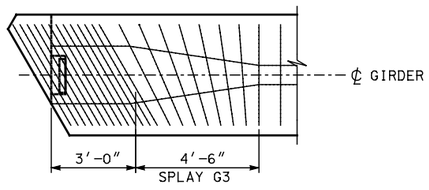

3 TRANSVERSE REINFORCING AT SKEWED ENDS - TOP

ONLY TRANSVERSE REINFORCING SHOWN

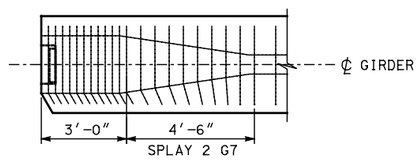

4 TRANSVERSE REINFORCING AT SKEWED ENDS - BOTTOM

ONLY TRANSVERSE REINFORCING SHOWN

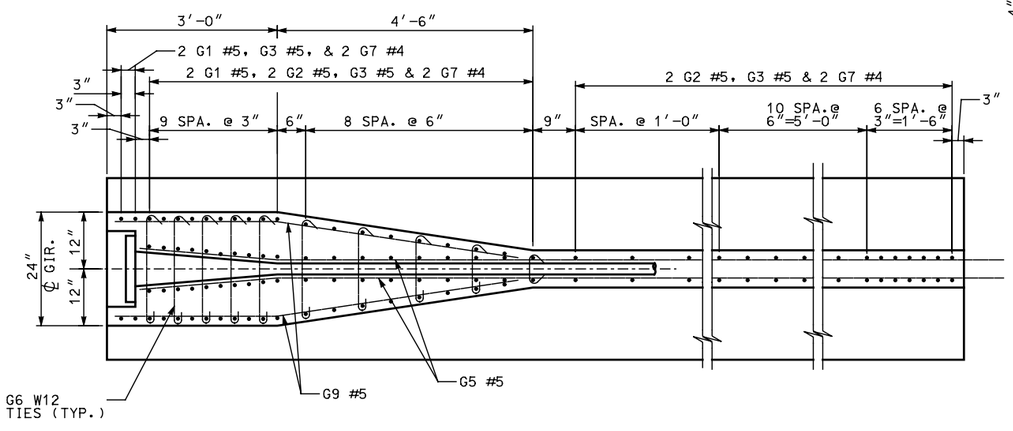

5 SECTION A

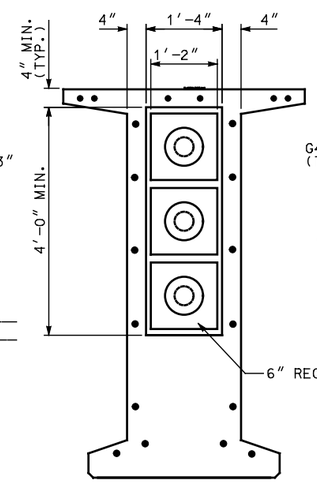

6 VIEW B

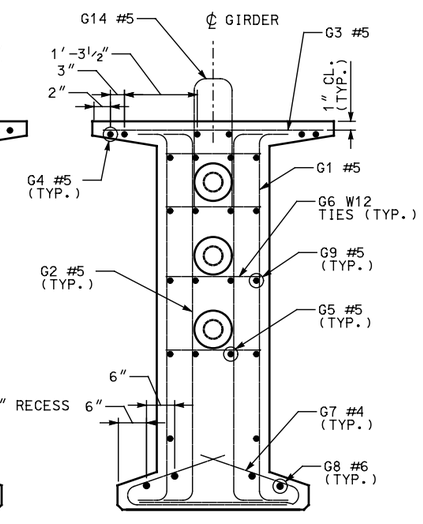

7 SECTION C

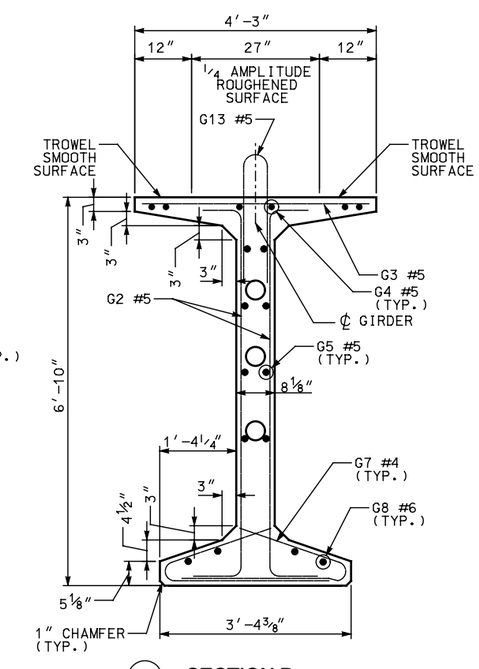

8 SECTION D

PRE-TENSIONING NOTES

1. INCREASE PLAN LENGTH AS NECESSARY TO COMPENSATE FOR SHORTENING DUE TO PRESTRESS AND SHRINKAGE.
2. ALL PRETENSIONED AND TEMPORARY STRANDS TO BE [0.6″ DIA.] LOW RELAXATION STRANDS (AASHTO M203 GRADE 270.)
3. FOR GIRDER ENDS CUT ALL STRANDS 1″ BELOW CONCRETE SURFACE AND GROUT WITH AN APPROVED EPOXY GROUT.
4. CONTRACTOR TO DESIGN AND INSTALL LIFTING EMBEDMENTS IN ACCORDANCE WITH THE STANDARD SPECIFICATIONS.
5. CAUTION TO BE EXERCISED IN HANDLING AND PLACING GIRDERS. ALL GIRDERS TO BE CHECKED BY THE CONTRACTOR TO ENSURE THAT THEY ARE BRACED ADEQUATELY TO PREVENT TIPPING AND TO CONTROL LATERAL BENDING DURING SHIPPING. ONCE ERECTED, ALL GIRDERS TO BE BRACED LATERALLY TO PREVENT TIPPING UNTIL THE DIAPHRAGMS HAVE BEEN INSTALLED.
6. FOR DIAPHRAGM NOTES SEE SHEET BT-4.
7. SEE FRAMING PLAN FOR DIAPHRAGM LOCATIONS AND SEE DIAPHRAGM DETAILS FOR CONNECTION REQUIREMENTS.
8. DESIGN SLAB STIRRUPS BASED ON DECK AND SHEAR CONNECTOR SELECTED.

NO.	DATE	BY	REMARKS

REVISIONS

UTAH DEPARTMENT OF TRANSPORTATION
SALT LAKE CITY, UTAH
STRUCTURES DIVISION

DESIGN CHECK
DRAWN CHECK
QUANT. CHECK

APPROVAL RECOMM. DATE SENIOR DESIGN ENGR.
APPROVED FOR ISSUE BY UDOT DATE UDOT BRIDGE ENGR.

TYPICAL DETAIL SHEET
POST-TENSIONED BULB TEE GIRDER
UBT82PT GIRDER DETAILS 1

PROJECT NUMBER

COUNTY

UBT82PT - 1
DRG. NO.

SHT. OF

UBT82-PT_G1.dgn
4/30/2009

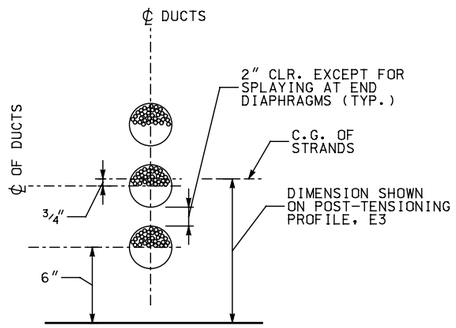

(11) **TENDON IN SAG CURVE STRAND LOCATION DETAIL**

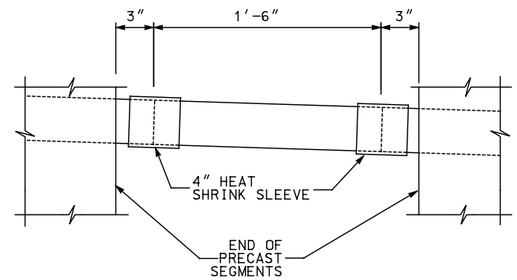

(12) **DUCT SPLICE DETAIL**

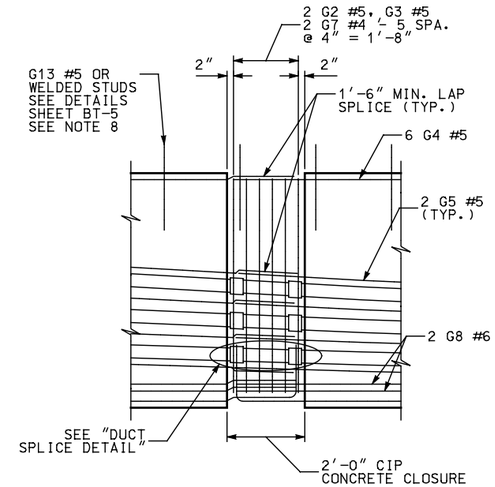

(10) **CLOSURE DETAIL**

NOTE: SQUARE ENDS OF GIRDER AT CLOSURE POUR

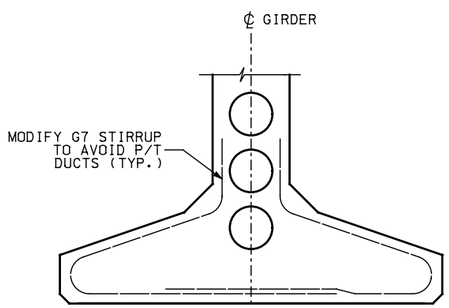

(13) **STIRRUP MODIFACTION AT P/T DUCT INTERFACE**

POST-TENSIONING TABLE

SPAN	GIRDER	MIN. CONC. COMPRESSIVE STRENGTH (KSI)		NUMBER OF STRANDS	PRESTRESSING LOAD (KIPS)		TOTAL PRESTRESS LOSS (KSI)		PRECAST LONGITUDINAL HALF-SECTION		
		GIRDER	CLOSURE		JACKING	AFTER SEATING	PRETENSIONING MID SEGMENT	P/T MID SEGMENT	E1 (IN.) (9)	E2 (IN.) (9)	E3 (IN.) (9)

POST-TENSIONING NOTES

1. SHOW THE MINIMUM COMPRESSIVE STRENGTH OF THE CAST-IN-PLACE CONCRETE AT THE CLOSURE AT THE TIME OF POST-TENSIONING IN THE POST-TENSIONING TABLE.

2. USE DUCT WITH A MAXIMUM OUTSIDE DIAMETER OF THE DUCT OF 4″ AND AN AREA OF AT LEAST 2.5 TIMES THE NET AREA OF THE PRESTRESSING STEEL IN THE DUCT.

3. THE DESIGN IS BASED ON THE FOLLOWING PARAMETERS:
   STRAND TYPE = 1/2″ DIA. OR 0.6″ DIA. LOW RELAXATION STRANDS
   ANCHOR SET = 3/8″
   CURVATURE FRICTION COEFFICIENT = 0.20
   WOBBLE FRICTION COEFFICIENT = 0.0002/FT
   SPECIFY THE ACTUAL ANCHOR SET AND JACKING FORCE USED ON THE SHOP PLANS AND INCLUDE THESE IN THE TRANSFER FORCE CALCULATIONS.

4. THE DESIGN IS BASED ON THE ESTIMATED PRESTRESS LOSS OF POST-TENSIONING STRANDS SHOWN IN THE POST-TENSIONING TABLE DUE TO STEEL RELAXATION, ELASTIC SHORTENING CREEP AND SHRINKAGE OF CONCRETE.

5. SUBMIT THE STRESSING SEQUENCE AND ELONGATION CALCULATIONS TO THE ENGINEER FOR APPROVAL. INCLUDE ALL LOSSES DUE TO TENDON VERTICAL AND HORIZONTAL CURVATURE IN ELONGATION CALCULATIONS. THE FOLLOWING CRITERIA SHOULD BE MET DURING THE STRESSING SEQUENCE:
   A. DISTRIBUTE THE PRESTRESSING FORCE WITH AN APPROXIMATELY EQUAL AMOUNT IN EACH WEB.
   B. PRESTRESS SYMMETRICALLY ABOUT THE CENTERLINE OF THE BRIDGE.
   C. STRESS NO MORE THAN ONE-HALF OF THE PRESTRESSING FORCE IN ANY WEB BEFORE AN EQUAL FORCE IS STRESSED IN THE ADJACENT WEBS. AT NO TIME DURING STRESSING OPERATION WILL MORE THAN 1/6 OF THE TOTAL PRESTRESSING FORCE BE APPLIED ECCENTRICALLY ABOUT THE CENTERLINE OF THE BRIDGE.

6. STRESS ALL TENDONS FROM ONE END.

NO.	DATE	BY	REMARKS

REVISIONS

UTAH DEPARTMENT OF TRANSPORTATION
SALT LAKE CITY, UTAH
STRUCTURES DIVISION

DESIGN — CHECK
DRAWN — CHECK
QUANT. — CHECK

APPROVAL RECOMM. — DATE — SENIOR DESIGN ENGR.
APPROVED FOR USE BY UDOT — DATE — UDOT BRIDGE ENGR.

TYPICAL DETAIL SHEET
POST-TENSIONED BULB TEE GIRDER
UBT82PT GIRDER DETAILS 2 & DESIGN WORKSHEET

PROJECT NUMBER

COUNTY

UBT82PT - 2
DRG. NO.

SHT. OF

UBT82-PT_02.dgn
4/30/2009

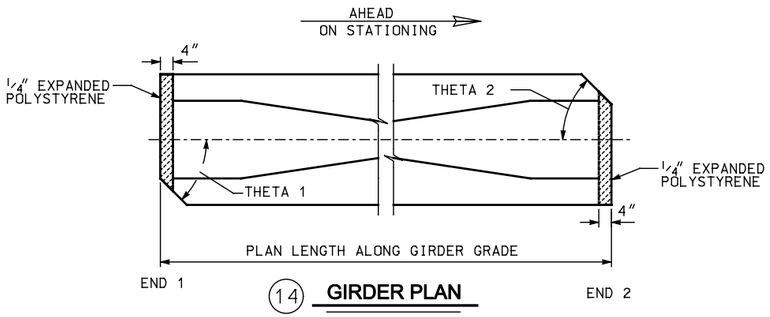

(14) **GIRDER PLAN**

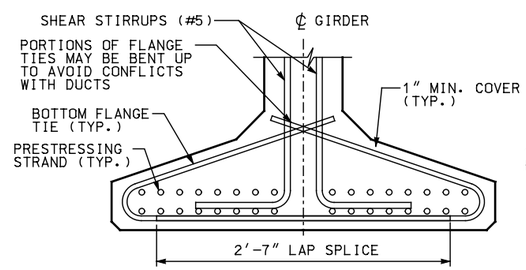

(15) **BOTTOM FLANGE REINFORCING IN MIDDLE SEGMENTS**

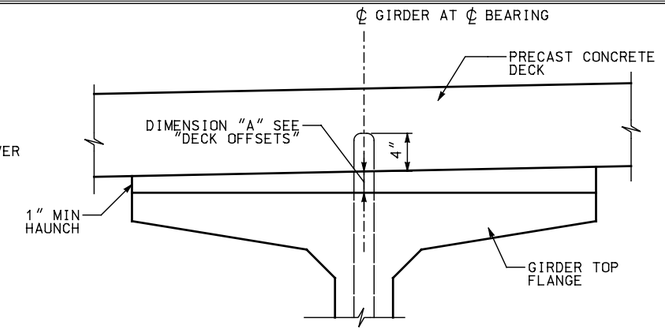

(20) **DECK ELEVATION**

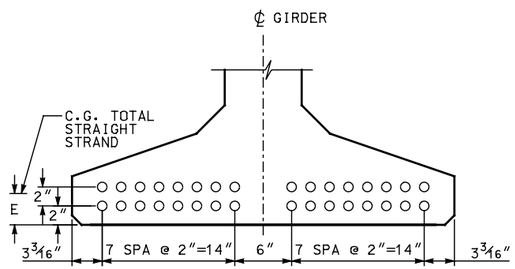

(17) **BOTTOM FLANGE STRAND PATTERN**

MID SEGMENT SHOWN, END SEGMENT SIMILAR

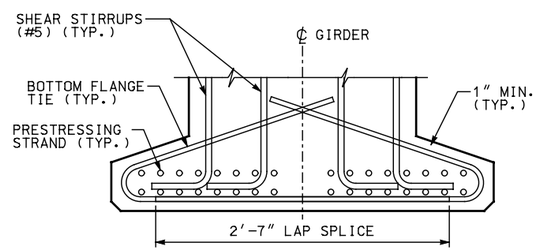

(16) **BOTTOM FLANGE REINFORCING AT ENDS OF END SEGMENTS**

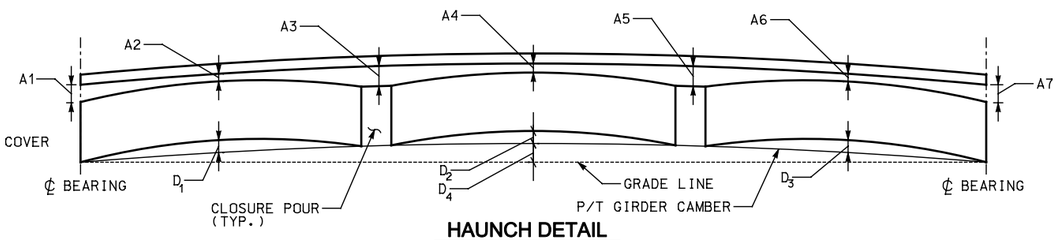

HAUNCH DETAIL

NOTE: 1. "A" DIMENSIONS BASED ON GIRDER DEFLECTIONS EQUAL TO "D40" AT TIME OF SLAB PLACEMENT (40 DAYS)

2. GIRDER CAMBER EXAGGERATED FOR CLARITY.

GIRDER SCHEDULE

SPAN	GIRDER	MINIMUM CONCRETE COMPR. STRENGTH F'CI (KSI)	F'C (KSI)	(14) THETA 1	(14) THETA 2	END SEGMENT 1 PLAN LENGTH (ALONG ℄ GIRDER GRADE)	STRAIGHT NO. OF STRANDS	STRAIGHT JACKING FORCE (LBS.)	C.G. STRANDS (IN.) E (17)	D1(40) (PRETENSIONING CAMBER)	MID-SEGMENT PLAN LENGTH (ALONG ℄ GIRDER GRADE)	STRAIGHT NO. OF STRANDS	STRAIGHT JACKING FORCE (LBS)	C.G. STRANDS (IN.) E (17)	D2(40) (PRETENSIONING CAMBER)	END SEGMENT 2 PLAN LENGTH (ALONG ℄ GIRDER GRADE)	STRAIGHT NO. OF STRANDS	STRAIGHT JACKING FORCE (LBS)	C.G. STRANDS (IN.) E (17)	D3(40) (PRETENSIONING CAMBER)	D4(40) (POST-TENSIONING CAMBER)	DECK OFFSETS A1	A2	A3	A4	A5	A6	A7

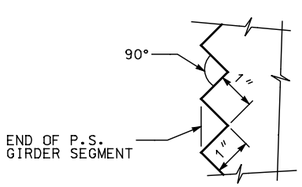

(18) **SAWTOOTH DETAILS**

SAWTEETH ARE FULL WIDTH - USE SAWTOOTH KEYS FROM BOTTOM OF BOTTOM FLANGE TO BOTTOM OF LOWEST HARPED STRAND AS WELL AS TOP FLANGE AND WEB ABOVE HARPED STRANDS AS SHOWN IN VIEW E - UBT82PT-1

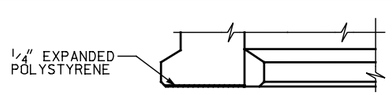

ELEVATION

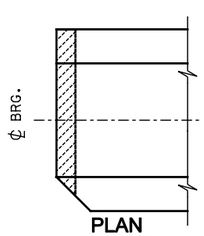

PLAN

(19) **BOTTOM FLANGE DETAILS ONLY AT CANTILEVER ABUTMENT**

MARK	LOCATION	SIZE	
G1	GIRDER END STIRRUPS	5	
G2	GIRDER STIRRUPS	5	
G3	GIRDER TOP FLANGE	5	STR.
G4	GIRDER LONGIT. FULL LENGTH	5	STR.
G5	GIRDER LONGIT.	5	STR.
G6	GIRDER END TIES	W12 **	
G7	GIRDER BOT. FLANGE TIES	1	
G8	GIRDER LONGIT.	6	STR.
G9	GIRDER LONGIT.	5	
G13	SLAB STIRRUP	5	
G14	SLAB STIRRUP	5	

NOTE: FOR DIMENSION "A", SEE "GIRDER SCHEDULE"

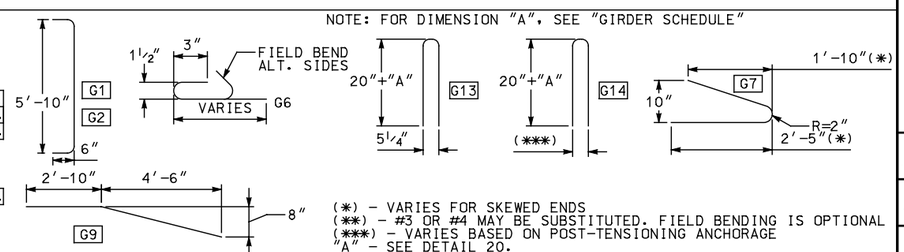

(*) - VARIES FOR SKEWED ENDS
(**) - #3 OR #4 MAY BE SUBSTITUTED. FIELD BENDING IS OPTIONAL
(***) - VARIES BASED ON POST-TENSIONING ANCHORAGE
"A" - SEE DETAIL 20.

NO.	DATE	BY	REMARKS

REVISIONS

UTAH DEPARTMENT OF TRANSPORTATION
SALT LAKE CITY, UTAH
STRUCTURES DIVISION

DESIGN — CHECK
DRAWN — CHECK
QUANT. — CHECK

APPROVAL RECOMM. — DATE — SENIOR DESIGN ENGR.
APPROVED FOR USE BY UDOT — DATE — UDOT BRIDGE ENGR.

TYPICAL DETAIL SHEET
POST-TENSIONED BULB TEE GIRDER
UBT82PT GIRDER DETAILS 3 & DESIGN DETAILS

PROJECT NUMBER

COUNTY
UBT82PT - 3
DRG. NO.
SHT. OF

UBT82-PT_G3.dgn
5/1/2009

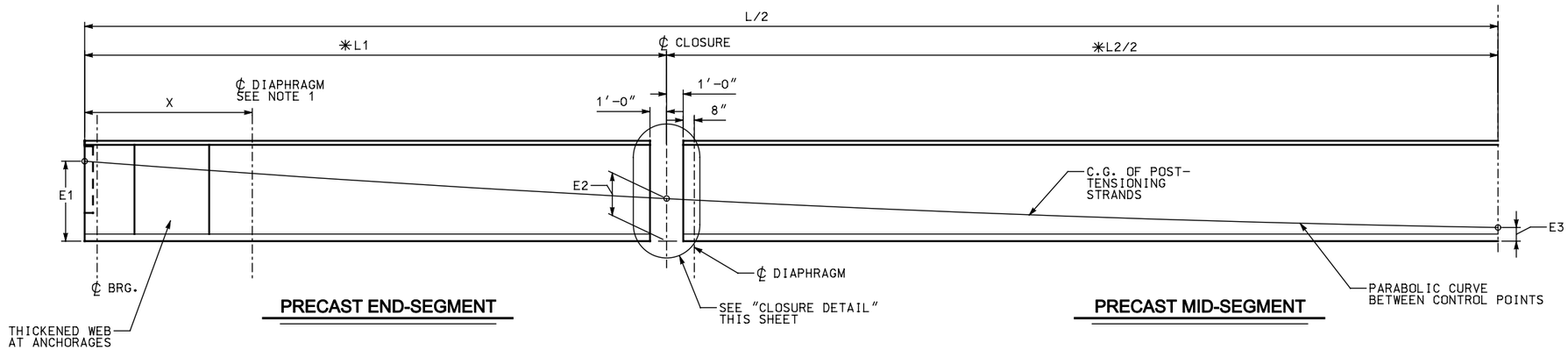

9 PRECAST LONGITUDINAL HALF-SECTION SHOWING POST-TENSIONING CABLE PATHS

✳ MEASURED BEFORE POST-TENSIONING

NOTE: 1. X = 10 FEET FOR INTEGRAL ABUTMENTS
X = NEAR BEAM END FOR CANTILEVER ABUTMENTS SEE FRAMING PLAN.

2. FOR OTHER DIAPHRAGM LOCATIONS SEE FRAMING PLAN.

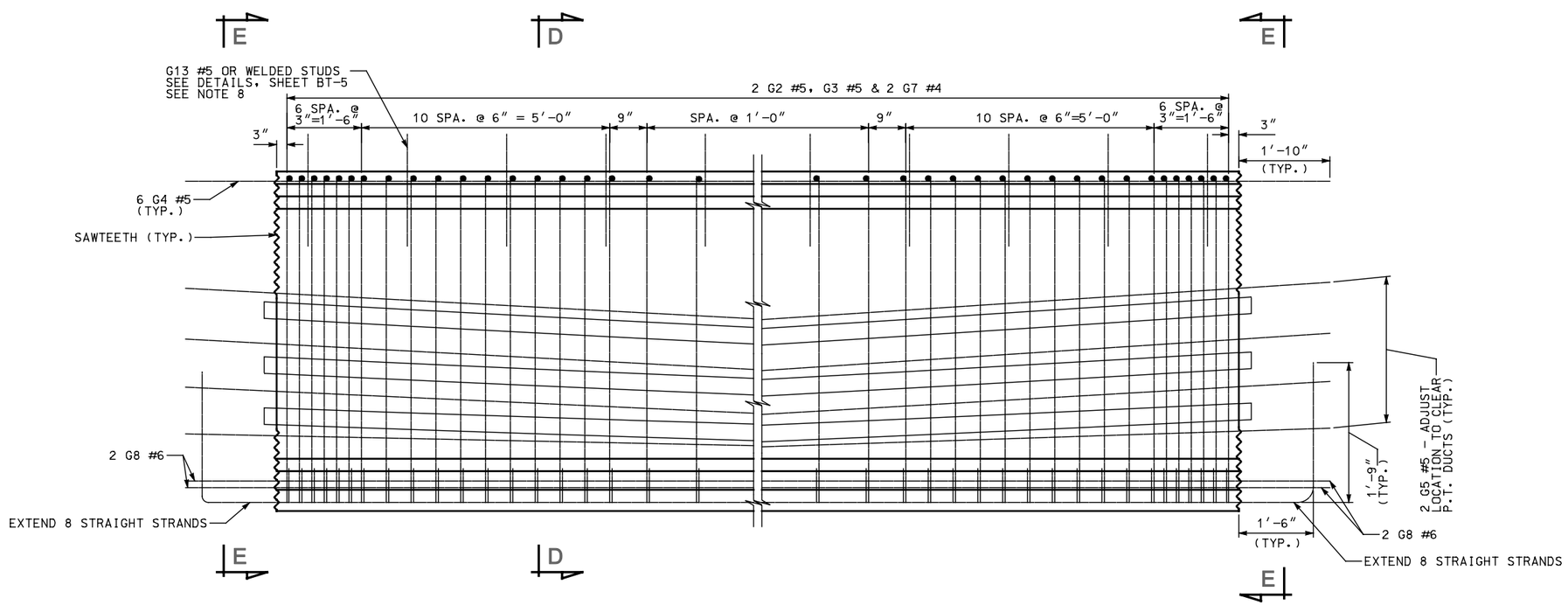

22 GIRDER ELEVATION MID-SEGMENT REINFORCING

NO.	DATE	BY	REMARKS

REVISIONS

UTAH DEPARTMENT OF TRANSPORTATION
SALT LAKE CITY, UTAH
STRUCTURES DIVISION

DESIGN ____ CHECK ____
DRAWN ____ CHECK ____
QUANT. ____ CHECK ____

APPROVAL RECOMM. ____ DATE ____ SENIOR DESIGN ENGR.
APPROVED FOR USE BY UDOT ____ DATE ____ UDOT BRIDGE ENGR.

TYPICAL DETAIL SHEET
POST-TENSIONED BULB TEE GIRDER
UBT82PT GIRDER DETAILS 4

PROJECT NUMBER

COUNTY

UBT82PT - 4
DRG. NO.

SHT. OF

UBT82-PT_G4.dgn
4/30/2009

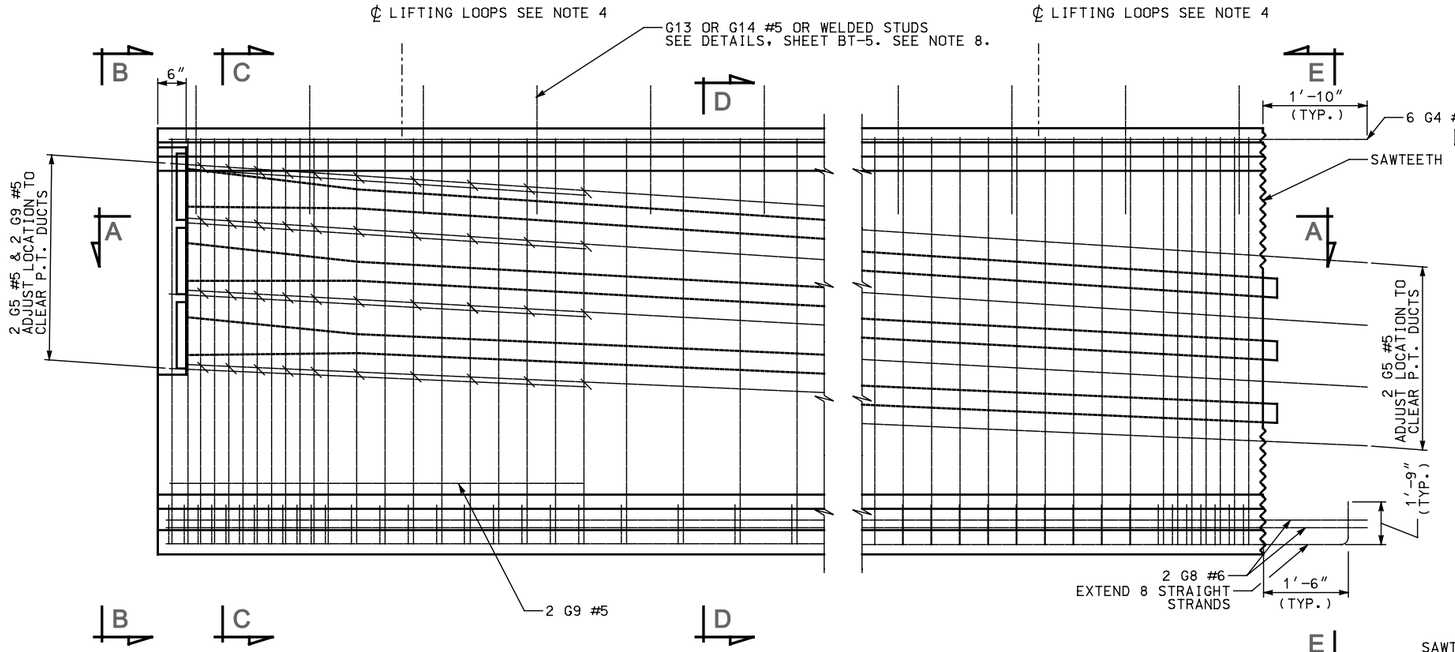

1 TYPICAL ELEVATION AT END SEGMENT

2 TYPICAL ELEVATION AT CLOSURE

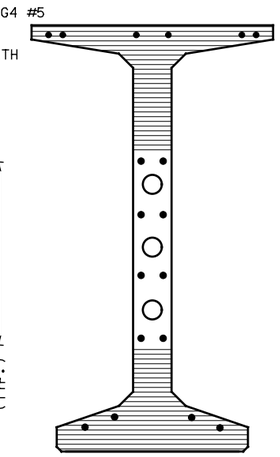

VIEW E

SAWTEETH SHOWN BY HATCHED AREA

PRE-TENSIONING NOTES

1. INCREASE PLAN LENGTH AS NECESSARY TO COMPENSATE FOR SHORTENING DUE TO PRESTRESS AND SHRINKAGE.
2. ALL PRETENSIONED AND TEMPORARY STRANDS TO BE [0.6" DIA.] LOW RELAXATION STRANDS (AASHTO M203 GRADE 270.)
3. FOR GIRDER ENDS CUT ALL STRANDS 1" BELOW CONCRETE SURFACE AND GROUT WITH AN APPROVED EPOXY GROUT.
4. CONTRACTOR TO DESIGN AND INSTALL LIFTING EMBEDMENTS IN ACCORDANCE WITH THE STANDARD SPECIFICATIONS.
5. CAUTION TO BE EXERCISED IN HANDLING AND PLACING GIRDERS. ALL GIRDERS TO BE CHECKED BY THE CONTRACTOR TO ENSURE THAT THEY ARE BRACED ADEQUATELY TO PREVENT TIPPING AND TO CONTROL LATERAL BENDING DURING SHIPPING. ONCE ERECTED, ALL GIRDERS TO BE BRACED LATERALLY TO PREVENT TIPPING UNTIL THE DIAPHRAGMS HAVE BEEN INSTALLED.
6. FOR DIAPHRAGM NOTES SEE SHEET BT-4.
7. SEE FRAMING PLAN FOR DIAPHRAGM LOCATIONS AND SEE DIAPHRAGM DETAILS FOR CONNECTION REQUIREMENTS.
8. DESIGN SLAB STIRRUPS BASED ON DECK AND SHEAR CONNECTOR SELECTED.

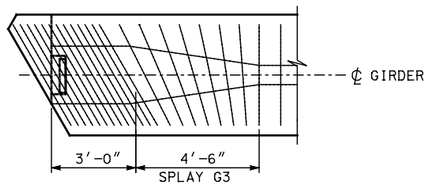

3 TRANSVERSE REINFORCING AT SKEWED ENDS - TOP

ONLY TRANSVERSE REINFORCING SHOWN

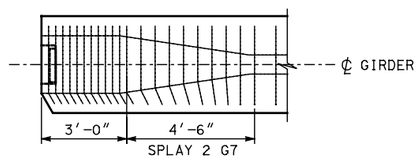

4 TRANSVERSE REINFORCING AT SKEWED ENDS - BOTTOM

ONLY TRANSVERSE REINFORCING SHOWN

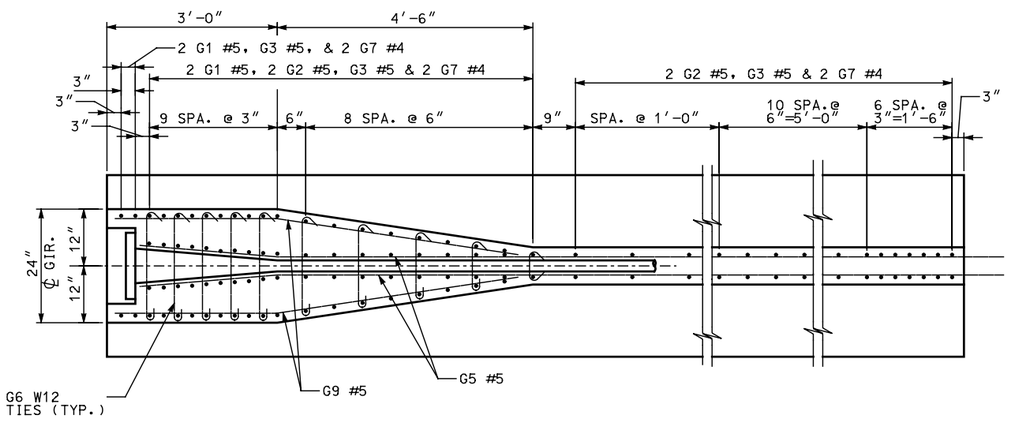

5 SECTION A

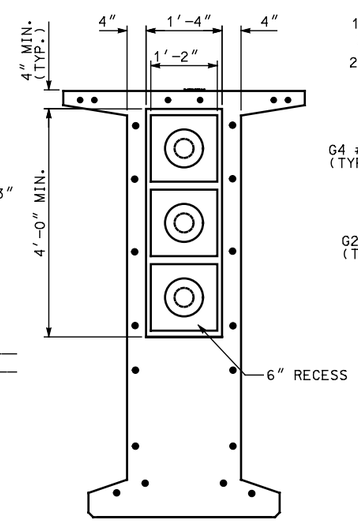

6 VIEW B

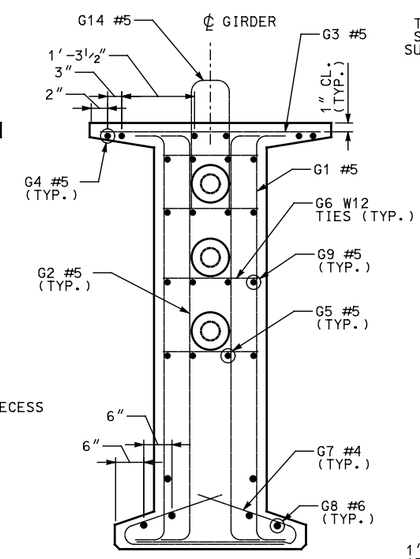

7 SECTION C

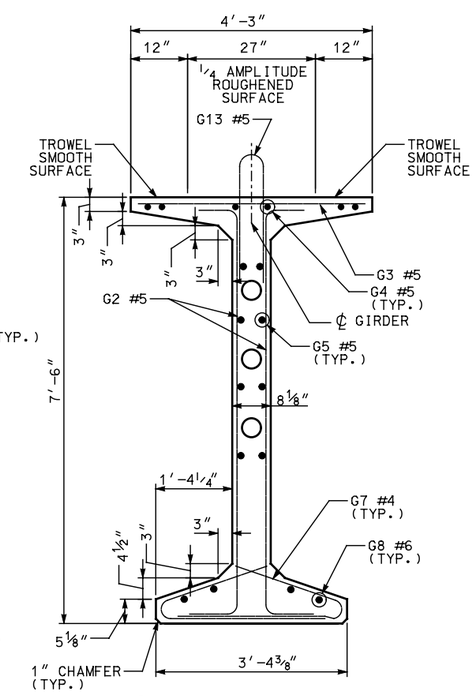

8 SECTION D

NO.	DATE	BY	REMARKS

REVISIONS

UTAH DEPARTMENT OF TRANSPORTATION
SALT LAKE CITY, UTAH
STRUCTURES DIVISION

DESIGN — CHECK
DRAWN — CHECK
QUANT. — CHECK

APPROVAL RECOMM. — DATE — SENIOR DESIGN ENGR.
APPROVED FOR USE BY UDOT — DATE — UDOT BRIDGE ENGR.

TYPICAL DETAIL SHEET
POST-TENSIONED BULB TEE GIRDER
UBT90PT GIRDER DETAILS 1

PROJECT NUMBER

COUNTY

UBT90PT - 1
DRG. NO.

SHT. OF

UBT90-PT_G1.dgn

4/30/2009

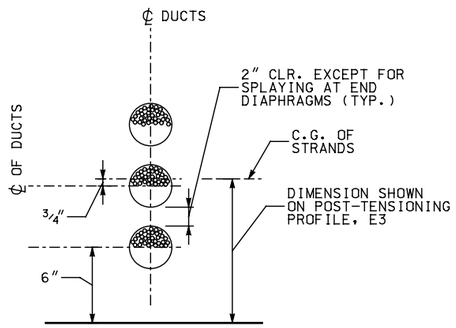

(11) **TENDON IN SAG CURVE STRAND LOCATION DETAIL**

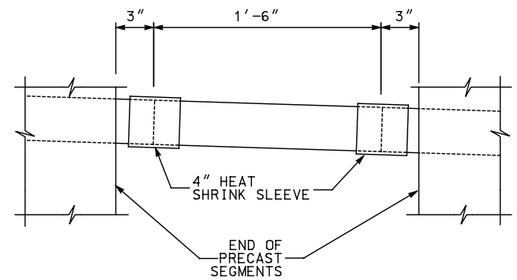

(12) **DUCT SPLICE DETAIL**

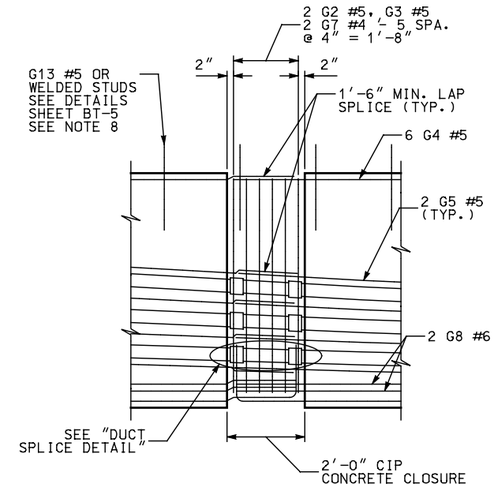

(10) **CLOSURE DETAIL**

NOTE: SQUARE ENDS OF GIRDER AT CLOSURE POUR

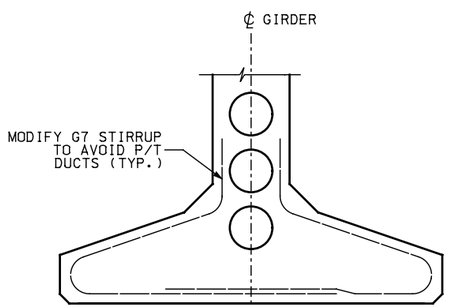

(13) **STIRRUP MODIFACTION AT P/T DUCT INTERFACE**

POST-TENSIONING TABLE

SPAN	GIRDER	MIN. CONC. COMPRESSIVE STRENGTH (KSI)		NUMBER OF STRANDS	PRESTRESSING LOAD (KIPS)		TOTAL PRESTRESS LOSS (KSI)		PRECAST LONGITUDINAL HALF-SECTION		
		GIRDER	CLOSURE		JACKING	AFTER SEATING	PRETENSIONING MID SEGMENT	P/T MID SEGMENT	E1 (IN.) (9)	E2 (IN.) (9)	E3 (IN.) (9)

POST-TENSIONING NOTES

1. SHOW THE MINIMUM COMPRESSIVE STRENGTH OF THE CAST-IN-PLACE CONCRETE AT THE CLOSURE AT THE TIME OF POST-TENSIONING IN THE POST-TENSIONING TABLE.
2. USE DUCT WITH A MAXIMUM OUTSIDE DIAMETER OF THE DUCT OF 4″ AND AN AREA OF AT LEAST 2.5 TIMES THE NET AREA OF THE PRESTRESSING STEEL IN THE DUCT.
3. THE DESIGN IS BASED ON THE FOLLOWING PARAMETERS:
   STRAND TYPE = 1/2″ DIA. OR 0.6″ DIA. LOW RELAXATION STRANDS
   ANCHOR SET = 3/8″
   CURVATURE FRICTION COEFFICIENT = 0.20
   WOBBLE FRICTION COEFFICIENT = 0.0002/FT
   SPECIFY THE ACTUAL ANCHOR SET AND JACKING FORCE USED ON THE SHOP PLANS AND INCLUDE THESE IN THE TRANSFER FORCE CALCULATIONS.
4. THE DESIGN IS BASED ON THE ESTIMATED PRESTRESS LOSS OF POST-TENSIONING STRANDS SHOWN IN THE POST-TENSIONING TABLE DUE TO STEEL RELAXATION, ELASTIC SHORTENING CREEP AND SHRINKAGE OF CONCRETE.
5. SUBMIT THE STRESSING SEQUENCE AND ELONGATION CALCULATIONS TO THE ENGINEER FOR APPROVAL. INCLUDE ALL LOSSES DUE TO TENDON VERTICAL AND HORIZONTAL CURVATURE IN ELONGATION CALCULATIONS. THE FOLLOWING CRITERIA SHOULD BE MET DURING THE STRESSING SEQUENCE:
   A. DISTRIBUTE THE PRESTRESSING FORCE WITH AN APPROXIMATELY EQUAL AMOUNT IN EACH WEB.
   B. PRESTRESS SYMMETRICALLY ABOUT THE CENTERLINE OF THE BRIDGE.
   C. STRESS NO MORE THAN ONE-HALF OF THE PRESTRESSING FORCE IN ANY WEB BEFORE AN EQUAL FORCE IS STRESSED IN THE ADJACENT WEBS. AT NO TIME DURING STRESSING OPERATION WILL MORE THAN 1/6 OF THE TOTAL PRESTRESSING FORCE BE APPLIED ECCENTRICALLY ABOUT THE CENTERLINE OF THE BRIDGE.
6. STRESS ALL TENDONS FROM ONE END.

NO.	DATE	BY	REMARKS

REVISIONS

UTAH DEPARTMENT OF TRANSPORTATION
SALT LAKE CITY, UTAH
STRUCTURES DIVISION

DESIGN — CHECK
DRAWN — CHECK
QUANT. — CHECK

APPROVAL RECOMM. — DATE — SENIOR DESIGN ENGR.
APPROVED FOR USE BY UDOT — DATE — UDOT BRIDGE ENGR.

TYPICAL DETAIL SHEET
POST-TENSIONED BULB TEE GIRDER
UBT90PT GIRDER DETAILS 2 & DESIGN WORKSHEET

PROJECT NUMBER

COUNTY

UBT90PT - 2
DRG. NO.

SHT. OF

UBT90-PT_G2.dgn
4/30/2009

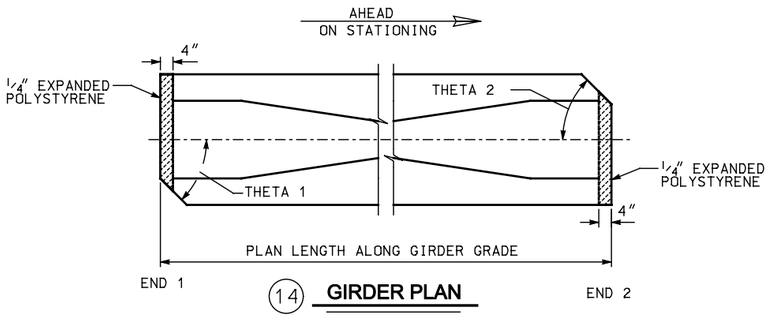

(14) **GIRDER PLAN**

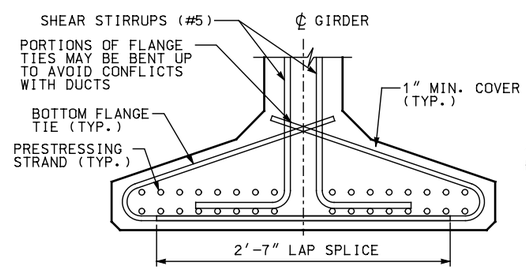

(15) **BOTTOM FLANGE REINFORCING IN MIDDLE SEGMENTS**

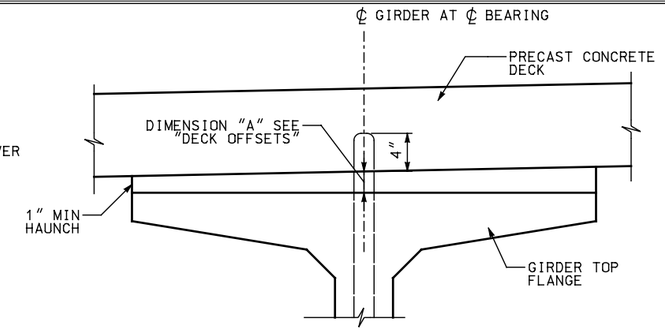

(20) **DECK ELEVATION**

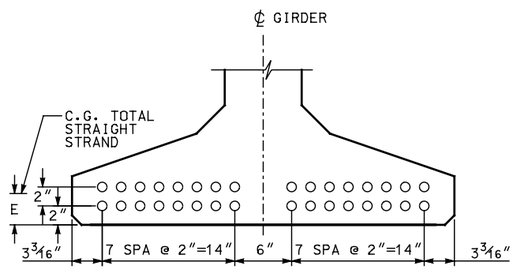

(17) **BOTTOM FLANGE STRAND PATTERN**

MID SEGMENT SHOWN, END SEGMENT SIMILAR

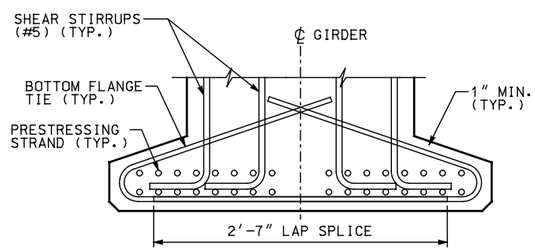

(16) **BOTTOM FLANGE REINFORCING AT ENDS OF END SEGMENTS**

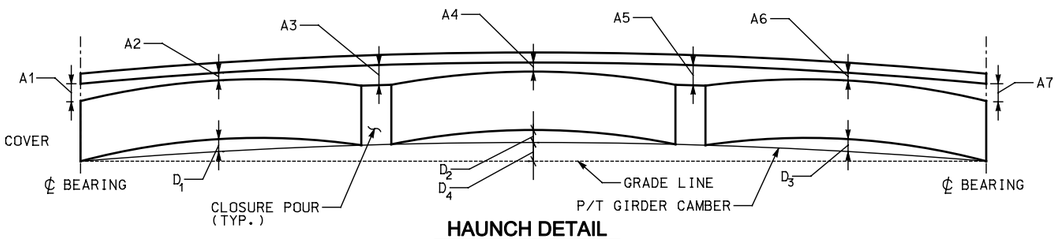

HAUNCH DETAIL

NOTE: 1. "A" DIMENSIONS BASED ON GIRDER DEFLECTIONS EQUAL TO "D40" AT TIME OF SLAB PLACEMENT (40 DAYS)

2. GIRDER CAMBER EXAGGERATED FOR CLARITY.

GIRDER SCHEDULE

SPAN	GIRDER	MINIMUM CONCRETE COMPR. STRENGTH F'CI (KSI)	MINIMUM CONCRETE COMPR. STRENGTH F'C (KSI)	(14) THETA 1	(14) THETA 2	END SEGMENT 1 PLAN LENGTH (ALONG ℄ GIRDER GRADE)	END SEGMENT 1 STRAIGHT NO. OF STRANDS	END SEGMENT 1 STRAIGHT JACKING FORCE (LBS.)	END SEGMENT 1 C.G. STRANDS (IN.) E (17)	END SEGMENT 1 D1(40) (PRETENSIONING CAMBER)	MID-SEGMENT PLAN LENGTH (ALONG ℄ GIRDER GRADE)	MID-SEGMENT STRAIGHT NO. OF STRANDS	MID-SEGMENT STRAIGHT JACKING FORCE (LBS)	MID-SEGMENT C.G. STRANDS (IN.) E (17)	MID-SEGMENT D2(40) (PRETENSIONING CAMBER)	END SEGMENT 2 PLAN LENGTH (ALONG ℄ GIRDER GRADE)	END SEGMENT 2 STRAIGHT NO. OF STRANDS	END SEGMENT 2 STRAIGHT JACKING FORCE (LBS)	END SEGMENT 2 C.G. STRANDS (IN.) E (17)	END SEGMENT 2 D3(40) (PRETENSIONING CAMBER)	D4(40) (POST-TENSIONING CAMBER)	DECK OFFSETS A1	DECK OFFSETS A2	DECK OFFSETS A3	DECK OFFSETS A4	DECK OFFSETS A5	DECK OFFSETS A6	DECK OFFSETS A7

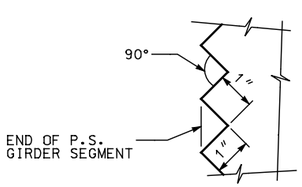

(18) **SAWTOOTH DETAILS**

SAWTEETH ARE FULL WIDTH - USE SAWTOOTH KEYS FROM BOTTOM OF BOTTOM FLANGE TO BOTTOM OF LOWEST HARPED STRAND AS WELL AS TOP FLANGE AND WEB ABOVE HARPED STRANDS AS SHOWN IN VIEW E - UBT90PT-1

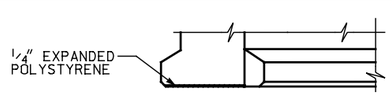

ELEVATION

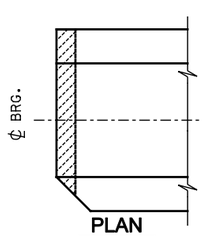

PLAN

(19) **BOTTOM FLANGE DETAILS ONLY AT CANTILEVER ABUTMENT**

MARK	LOCATION	SIZE	
G1	GIRDER END STIRRUPS	5	
G2	GIRDER STIRRUPS	5	
G3	GIRDER TOP FLANGE	5	STR.
G4	GIRDER LONGIT. FULL LENGTH	5	STR.
G5	GIRDER LONGIT.	5	STR.
G6	GIRDER END TIES	W12 **	
G7	GIRDER BOT. FLANGE TIES	1	
G8	GIRDER LONGIT.	6	STR.
G9	GIRDER LONGIT.	5	
G13	SLAB STIRRUP	5	
G14	SLAB STIRRUP	5	

NOTE: FOR DIMENSION "A", SEE "GIRDER SCHEDULE"

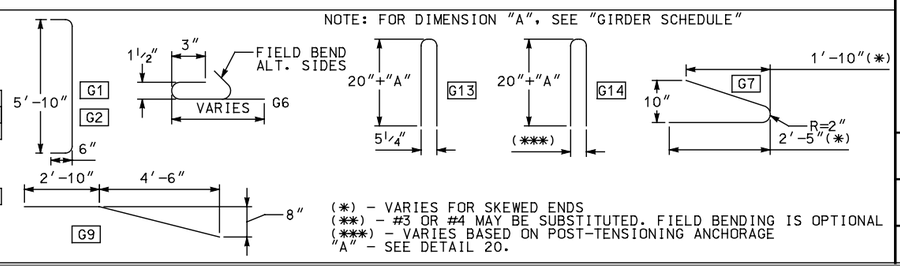

(*) - VARIES FOR SKEWED ENDS
(**) - #3 OR #4 MAY BE SUBSTITUTED. FIELD BENDING IS OPTIONAL
(***) - VARIES BASED ON POST-TENSIONING ANCHORAGE
"A" - SEE DETAIL 20.

NO.	DATE	BY	REMARKS

REVISIONS

UTAH DEPARTMENT OF TRANSPORTATION
SALT LAKE CITY, UTAH
STRUCTURES DIVISION

DESIGN — CHECK
DRAWN — CHECK
QUANT. — CHECK

APPROVAL RECOMM. — DATE — SENIOR DESIGN ENGR.
APPROVED FOR USE BY UDOT — DATE — UDOT BRIDGE ENGR.

TYPICAL DETAIL SHEET
POST-TENSIONED BULB TEE GIRDER
UBT90PT GIRDER DETAILS 3 & DESIGN DETAILS

PROJECT NUMBER

COUNTY
UBT90PT - 3
DRG. NO.
SHT. OF

UBT90-PT - G3.dgn
5/1/2009

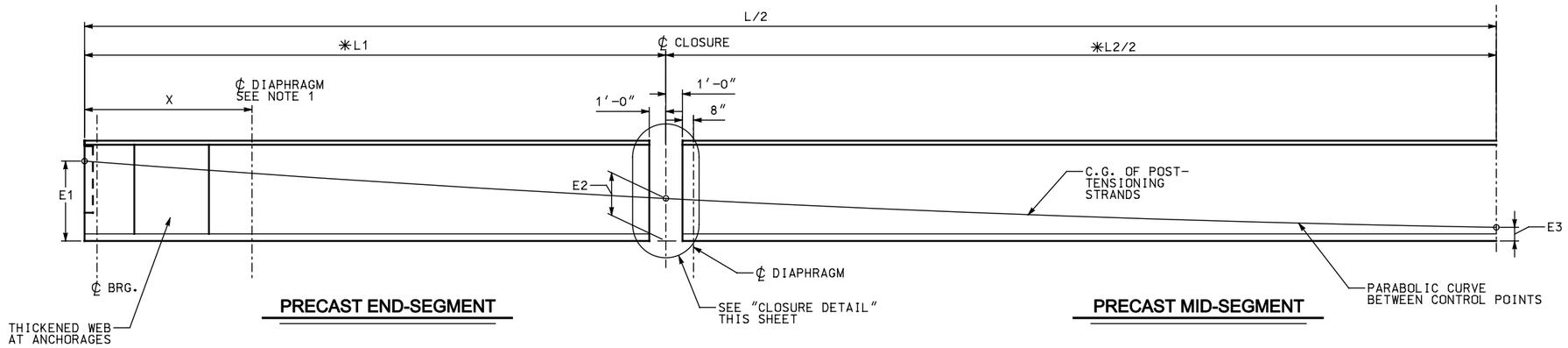

(9) PRECAST LONGITUDINAL HALF-SECTION SHOWING POST-TENSIONING CABLE PATHS

✳ MEASURED BEFORE POST-TENSIONING

NOTE: 1. X = 10 FEET FOR INTEGRAL ABUTMENTS
X = NEAR BEAM END FOR CANTILEVER ABUTMENTS SEE FRAMING PLAN.

2. FOR OTHER DIAPHRAGM LOCATIONS SEE FRAMING PLAN.

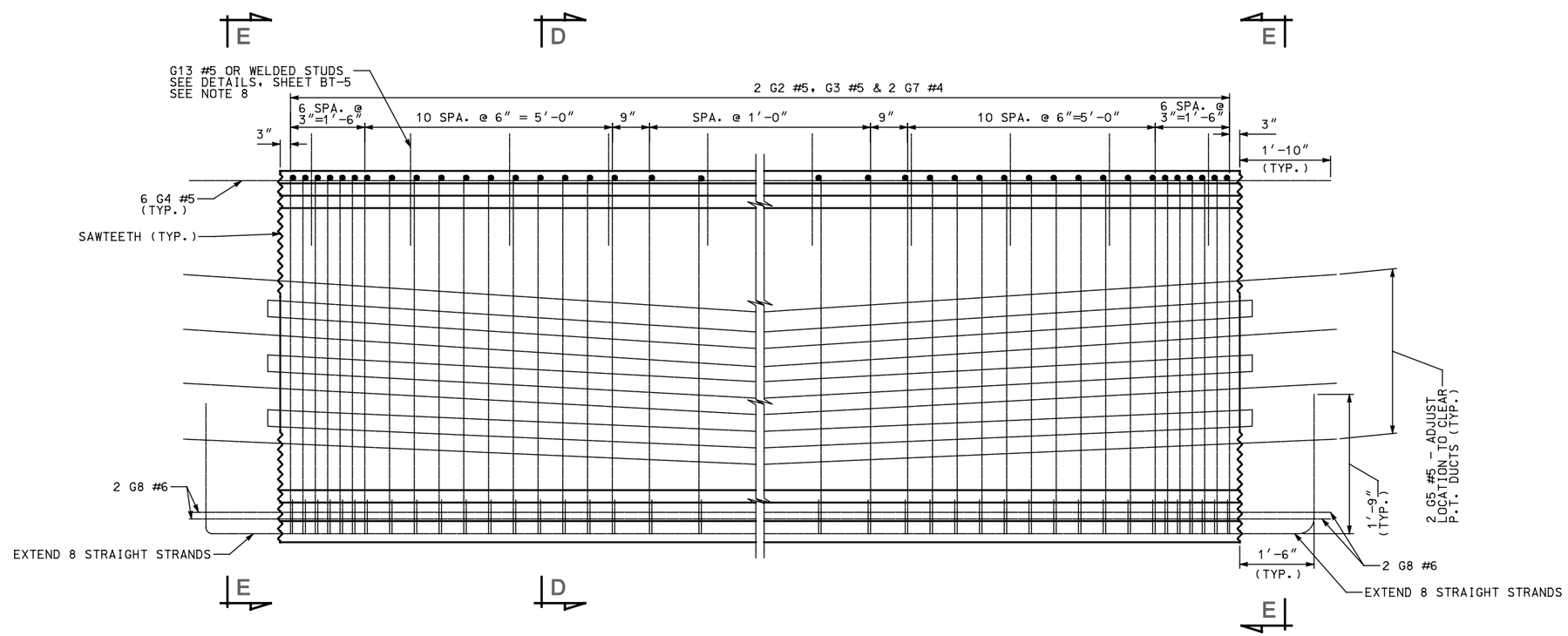

(22) GIRDER ELEVATION MID-SEGMENT REINFORCING

NO.	DATE	BY	REMARKS

REVISIONS

UTAH DEPARTMENT OF TRANSPORTATION
SALT LAKE CITY, UTAH
STRUCTURES DIVISION

DESIGN — CHECK
DRAWN — CHECK
QUANT. — CHECK

APPROVAL RECOMM. — DATE — SENIOR DESIGN ENGR.
APPROVED FOR USE BY UDOT — DATE — UDOT BRIDGE ENGR.

TYPICAL DETAIL SHEET
POST-TENSIONED BULB TEE GIRDER
UBT90PT GIRDER DETAILS 4

PROJECT NUMBER

COUNTY

UBT90PT - 4
DRG. NO.

SHT. OF

UBT90-PT_G4.dgn
4/30/2009

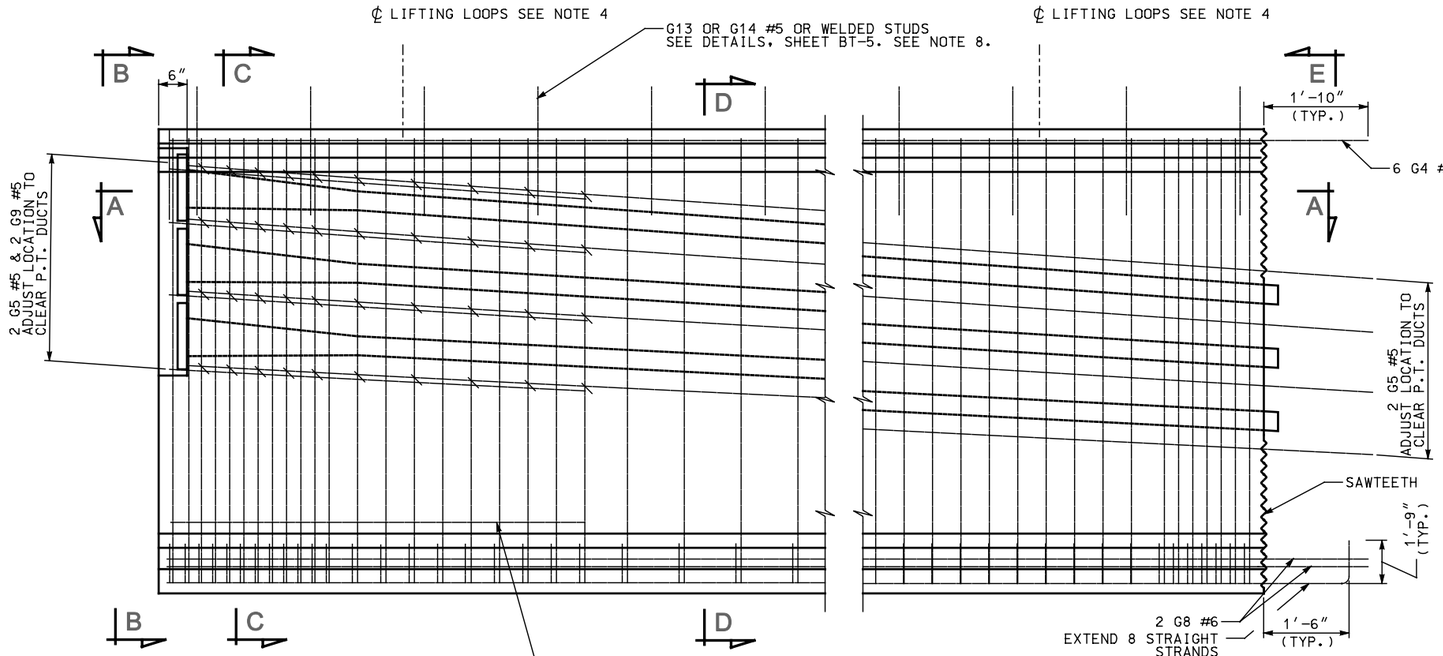

1 TYPICAL ELEVATION AT END SEGMENT

2 TYPICAL ELEVATION AT CLOSURE

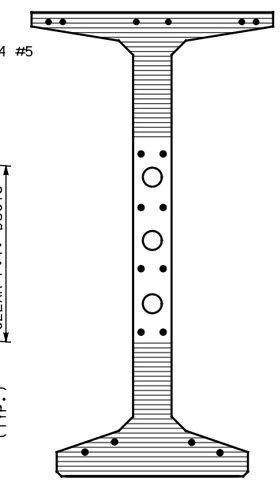

VIEW E

SAWTEETH SHOWN BY HATCHED AREA

PRE-TENSIONING NOTES

1. INCREASE PLAN LENGTH AS NECESSARY TO COMPENSATE FOR SHORTENING DUE TO PRESTRESS AND SHRINKAGE.
2. ALL PRETENSIONED AND TEMPORARY STRANDS TO BE [0.6″ DIA.] LOW RELAXATION STRANDS (AASHTO M203 GRADE 270.)
3. FOR GIRDER ENDS CUT ALL STRANDS 1″ BELOW CONCRETE SURFACE AND GROUT WITH AN APPROVED EPOXY GROUT.
4. CONTRACTOR TO DESIGN AND INSTALL LIFTING EMBEDMENTS IN ACCORDANCE WITH THE STANDARD SPECIFICATIONS.
5. CAUTION TO BE EXERCISED IN HANDLING AND PLACING GIRDERS. ALL GIRDERS TO BE CHECKED BY THE CONTRACTOR TO ENSURE THAT THEY ARE BRACED ADEQUATELY TO PREVENT TIPPING AND TO CONTROL LATERAL BENDING DURING SHIPPING. ONCE ERECTED, ALL GIRDERS TO BE BRACED LATERALLY TO PREVENT TIPPING UNTIL THE DIAPHRAGMS HAVE BEEN INSTALLED.
6. FOR DIAPHRAGM NOTES SEE SHEET BT-4.
7. SEE FRAMING PLAN FOR DIAPHRAGM LOCATIONS AND SEE DIAPHRAGM DETAILS FOR CONNECTION REQUIREMENTS.
8. DESIGN SLAB STIRRUPS BASED ON DECK AND SHEAR CONNECTOR SELECTED.

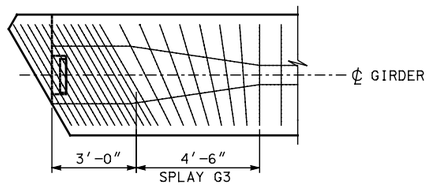

3 TRANSVERSE REINFORCING AT SKEWED ENDS - TOP

ONLY TRANSVERSE REINFORCING SHOWN

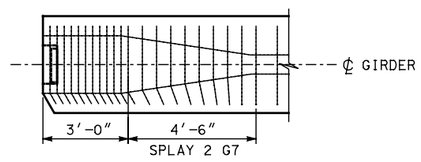

4 TRANSVERSE REINFORCING AT SKEWED ENDS - BOTTOM

ONLY TRANSVERSE REINFORCING SHOWN

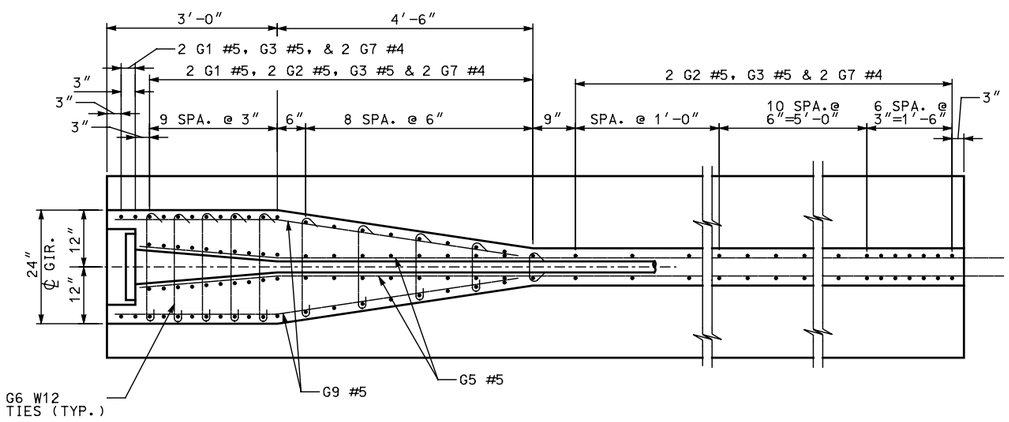

5 SECTION A

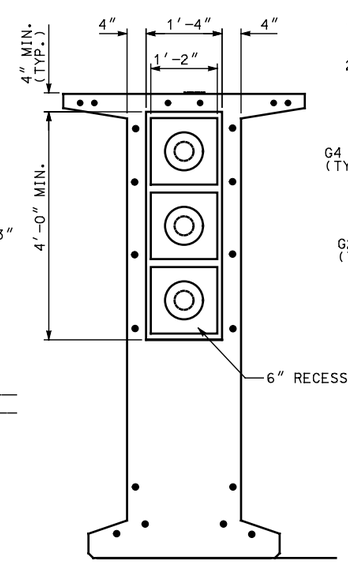

6 VIEW B

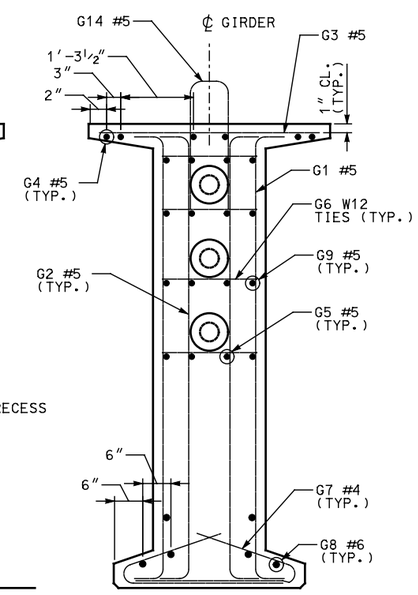

7 SECTION C

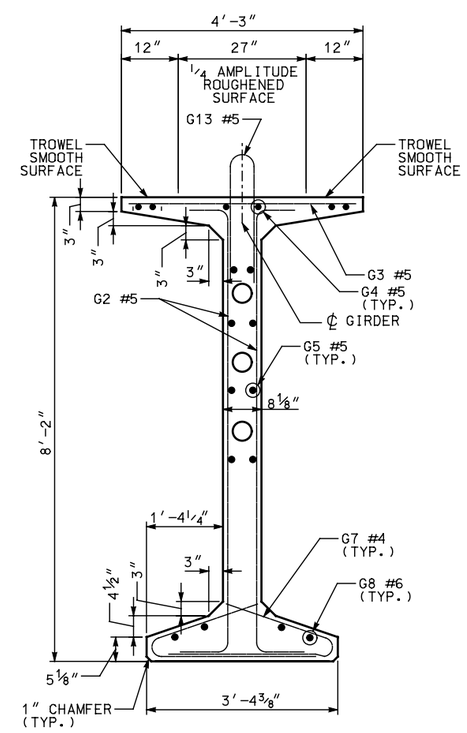

8 SECTION D

NO.	DATE	BY	REMARKS

REVISIONS

UTAH DEPARTMENT OF TRANSPORTATION
SALT LAKE CITY, UTAH
STRUCTURES DIVISION

DESIGN — CHECK
DRAWN — CHECK
QUANT. — CHECK

APPROVAL RECOMM. — DATE — SENIOR DESIGN ENGR.
APPROVED FOR ISSUE BY UDOT — DATE — UDOT BRIDGE ENGR.

TYPICAL DETAIL SHEET
POST-TENSIONED BULB TEE GIRDER
UBT98PT GIRDER DETAILS 1

PROJECT NUMBER

COUNTY

UBT98PT - 1
DRG. NO.

SHT. OF

UBT98-PT_G1.dgn

4/30/2009

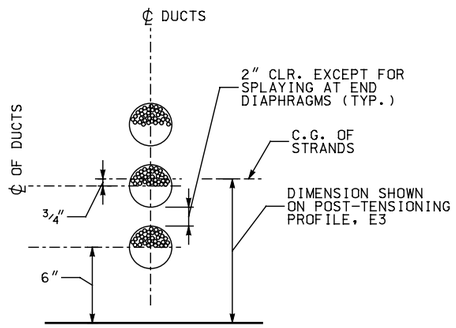

(11) **TENDON IN SAG CURVE STRAND LOCATION DETAIL**

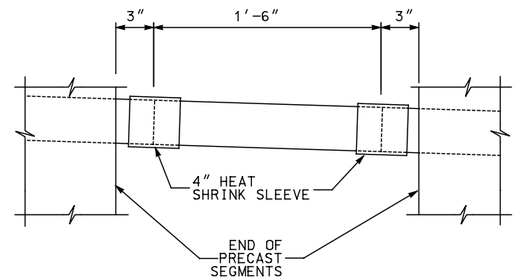

(12) **DUCT SPLICE DETAIL**

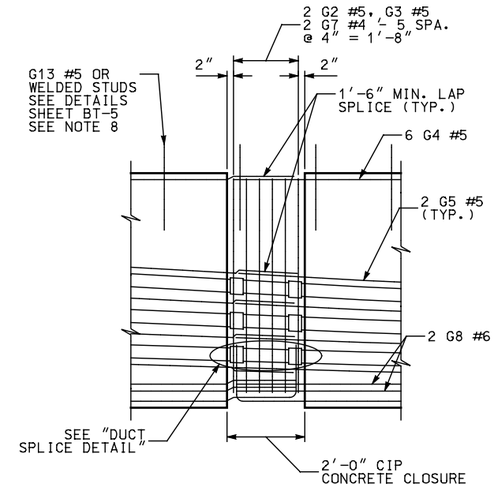

(10) **CLOSURE DETAIL**

NOTE: SQUARE ENDS OF GIRDER AT CLOSURE POUR

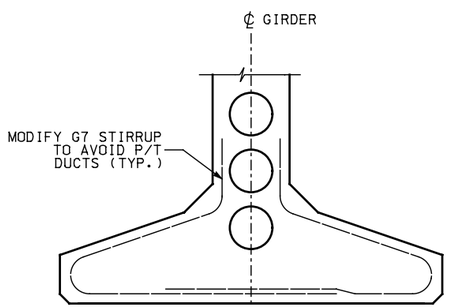

(13) **STIRRUP MODIFACTION AT P/T DUCT INTERFACE**

POST-TENSIONING TABLE

SPAN	GIRDER	MIN. CONC. COMPRESSIVE STRENGTH (KSI)		NUMBER OF STRANDS	PRESTRESSING LOAD (KIPS)		TOTAL PRESTRESS LOSS (KSI)		PRECAST LONGITUDINAL HALF-SECTION		
		GIRDER	CLOSURE		JACKING	AFTER SEATING	PRETENSIONING MID SEGMENT	P/T MID SEGMENT	E1 (IN.) (9)	E2 (IN.) (9)	E3 (IN.) (9)

POST-TENSIONING NOTES

1. SHOW THE MINIMUM COMPRESSIVE STRENGTH OF THE CAST-IN-PLACE CONCRETE AT THE CLOSURE AT THE TIME OF POST-TENSIONING IN THE POST-TENSIONING TABLE.
2. USE DUCT WITH A MAXIMUM OUTSIDE DIAMETER OF THE DUCT OF 4″ AND AN AREA OF AT LEAST 2.5 TIMES THE NET AREA OF THE PRESTRESSING STEEL IN THE DUCT.
3. THE DESIGN IS BASED ON THE FOLLOWING PARAMETERS:
   STRAND TYPE = 1/2″ DIA. OR 0.6″ DIA. LOW RELAXATION STRANDS
   ANCHOR SET = 3/8″
   CURVATURE FRICTION COEFFICIENT = 0.20
   WOBBLE FRICTION COEFFICIENT = 0.0002/FT
   SPECIFY THE ACTUAL ANCHOR SET AND JACKING FORCE USED ON THE SHOP PLANS AND INCLUDE THESE IN THE TRANSFER FORCE CALCULATIONS.
4. THE DESIGN IS BASED ON THE ESTIMATED PRESTRESS LOSS OF POST-TENSIONING STRANDS SHOWN IN THE POST-TENSIONING TABLE DUE TO STEEL RELAXATION, ELASTIC SHORTENING CREEP AND SHRINKAGE OF CONCRETE.
5. SUBMIT THE STRESSING SEQUENCE AND ELONGATION CALCULATIONS TO THE ENGINEER FOR APPROVAL. INCLUDE ALL LOSSES DUE TO TENDON VERTICAL AND HORIZONTAL CURVATURE IN ELONGATION CALCULATIONS. THE FOLLOWING CRITERIA SHOULD BE MET DURING THE STRESSING SEQUENCE:
   A. DISTRIBUTE THE PRESTRESSING FORCE WITH AN APPROXIMATELY EQUAL AMOUNT IN EACH WEB.
   B. PRESTRESS SYMMETRICALLY ABOUT THE CENTERLINE OF THE BRIDGE.
   C. STRESS NO MORE THAN ONE-HALF OF THE PRESTRESSING FORCE IN ANY WEB BEFORE AN EQUAL FORCE IS STRESSED IN THE ADJACENT WEBS. AT NO TIME DURING STRESSING OPERATION WILL MORE THAN 1/6 OF THE TOTAL PRESTRESSING FORCE BE APPLIED ECCENTRICALLY ABOUT THE CENTERLINE OF THE BRIDGE.
6. STRESS ALL TENDONS FROM ONE END.

NO.	DATE	BY	REMARKS

REVISIONS

UTAH DEPARTMENT OF TRANSPORTATION
SALT LAKE CITY, UTAH
STRUCTURES DIVISION

DESIGN — CHECK
DRAWN — CHECK
QUANT. — CHECK

APPROVAL RECOMM. — DATE — SENIOR DESIGN ENGR.
APPROVED FOR USE BY UDOT — DATE — UDOT BRIDGE ENGR.

TYPICAL DETAIL SHEET
POST-TENSIONED BULB TEE GIRDER
UBT98PT GIRDER DETAILS 2 & DESIGN WORKSHEET

PROJECT NUMBER

COUNTY

UBT98PT - 2
DRG. NO.

SHT. OF

UBT98-PT_G2.dgn
4/30/2009

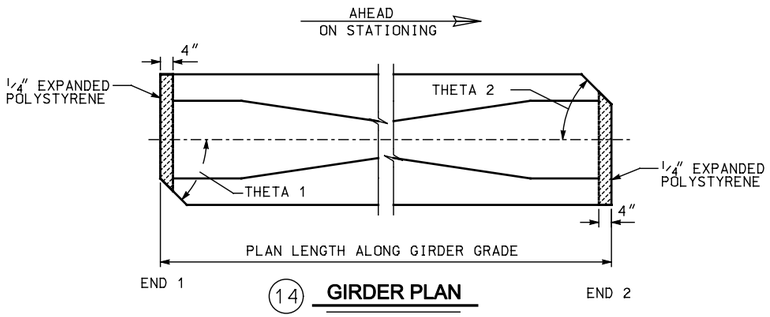

(14) **GIRDER PLAN**

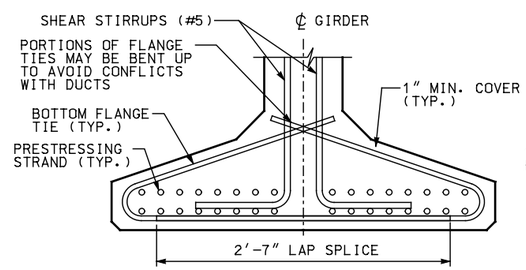

(15) **BOTTOM FLANGE REINFORCING IN MIDDLE SEGMENTS**

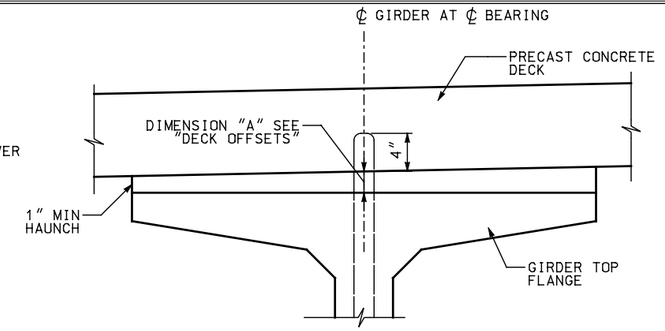

(20) **DECK ELEVATION**

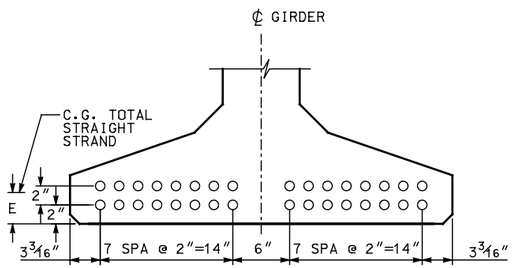

(17) **BOTTOM FLANGE STRAND PATTERN**

MID SEGMENT SHOWN, END SEGMENT SIMILAR

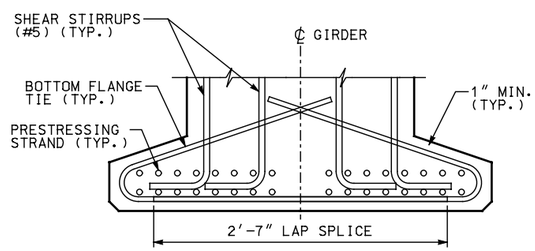

(16) **BOTTOM FLANGE REINFORCING AT ENDS OF END SEGMENTS**

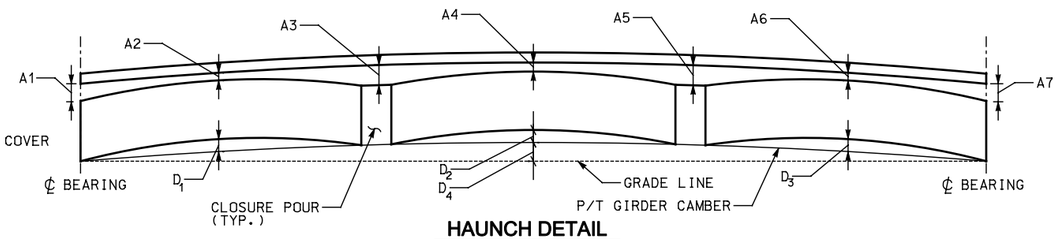

HAUNCH DETAIL

NOTE: 1. "A" DIMENSIONS BASED ON GIRDER DEFLECTIONS EQUAL TO "D40" AT TIME OF SLAB PLACEMENT (40 DAYS)

2. GIRDER CAMBER EXAGGERATED FOR CLARITY.

GIRDER SCHEDULE

SPAN	GIRDER	MINIMUM CONCRETE COMPR. STRENGTH				END SEGMENT 1					MID-SEGMENT					END SEGMENT 2					DECK OFFSETS						
							STRAIGHT		C.G. STRANDS (IN.)			STRAIGHT		C.G. STRANDS (IN.)			STRAIGHT		C.G. STRANDS (IN.)								
		F'CI (KSI)	F'C (KSI)	(14) THETA 1	(14) THETA 2	PLAN LENGTH (ALONG ℄ GIRDER GRADE)	NO. OF STRANDS	JACKING FORCE (LBS.)	E (17)	D1(40) (PRETENSIONING CAMBER)	PLAN LENGTH (ALONG ℄ GIRDER GRADE)	NO. OF STRANDS	JACKING FORCE (LBS)	E (17)	D2(40) (PRETENSIONING CAMBER)	PLAN LENGTH (ALONG ℄ GIRDER GRADE)	NO. OF STRANDS	JACKING FORCE (LBS)	E (17)	D3(40) (PRETENSIONING CAMBER)	D4(40) (POST-TENSIONING CAMBER)	A1	A2	A3	A4	A5	A6	A7

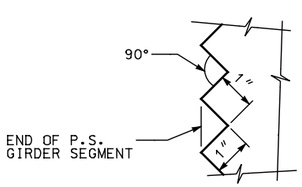

(18) **SAWTOOTH DETAILS**

SAWTEETH ARE FULL WIDTH - USE SAWTOOTH KEYS FROM BOTTOM OF BOTTOM FLANGE TO BOTTOM OF LOWEST HARPED STRAND AS WELL AS TOP FLANGE AND WEB ABOVE HARPED STRANDS AS SHOWN IN VIEW E - UBT98PT-1

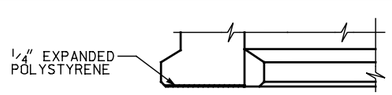

ELEVATION

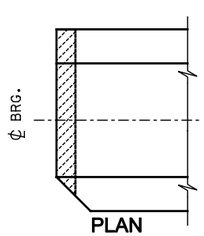

PLAN

(19) **BOTTOM FLANGE DETAILS ONLY AT CANTILEVER ABUTMENT**

MARK	LOCATION	SIZE	
G1	GIRDER END STIRRUPS	5	
G2	GIRDER STIRRUPS	5	
G3	GIRDER TOP FLANGE	5	STR.
G4	GIRDER LONGIT. FULL LENGTH	5	STR.
G5	GIRDER LONGIT.	5	STR.
G6	GIRDER END TIES	W12 **	
G7	GIRDER BOT. FLANGE TIES	1	
G8	GIRDER LONGIT.	6	STR.
G9	GIRDER LONGIT.	5	
G13	SLAB STIRRUP	5	
G14	SLAB STIRRUP	5	

NOTE: FOR DIMENSION "A", SEE "GIRDER SCHEDULE"

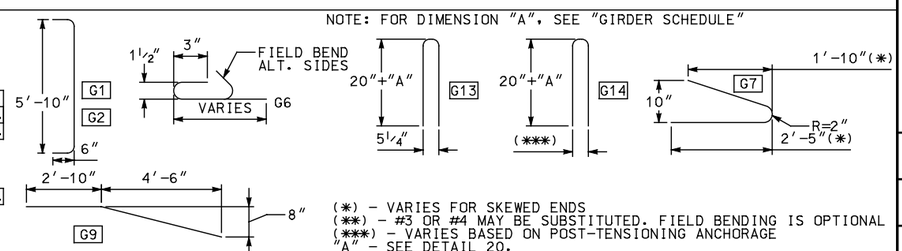

(*) - VARIES FOR SKEWED ENDS
(**) - #3 OR #4 MAY BE SUBSTITUTED. FIELD BENDING IS OPTIONAL
(***) - VARIES BASED ON POST-TENSIONING ANCHORAGE
"A" - SEE DETAIL 20.

REVISIONS

NO.	DATE	BY	REMARKS

UTAH DEPARTMENT OF TRANSPORTATION
SALT LAKE CITY, UTAH
STRUCTURES DIVISION

DESIGN — CHECK
DRAWN — CHECK
QUANT. — CHECK

APPROVAL RECOMM. — DATE — SENIOR DESIGN ENGR.
APPROVED FOR USE BY UDOT — DATE — UDOT BRIDGE ENGR.

TYPICAL DETAIL SHEET
POST-TENSIONED BULB TEE GIRDER
UBT98PT GIRDER DETAILS 3 & DESIGN DETAILS

PROJECT NUMBER

COUNTY

UBT98PT - 3
DRG. NO.

SHT. OF

UBT98-PT - G3.dgn

5/1/2009

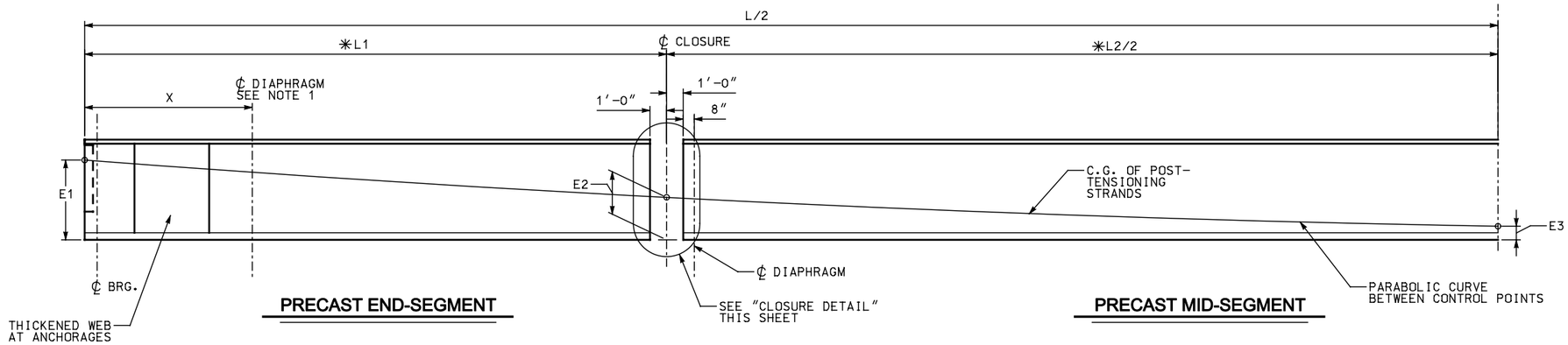

(9) PRECAST LONGITUDINAL HALF-SECTION SHOWING POST-TENSIONING CABLE PATHS

✳ MEASURED BEFORE POST-TENSIONING

NOTE: 1. X = 10 FEET FOR INTEGRAL ABUTMENTS
X = NEAR BEAM END FOR CANTILEVER ABUTMENTS SEE FRAMING PLAN.

2. FOR OTHER DIAPHRAGM LOCATIONS SEE FRAMING PLAN.

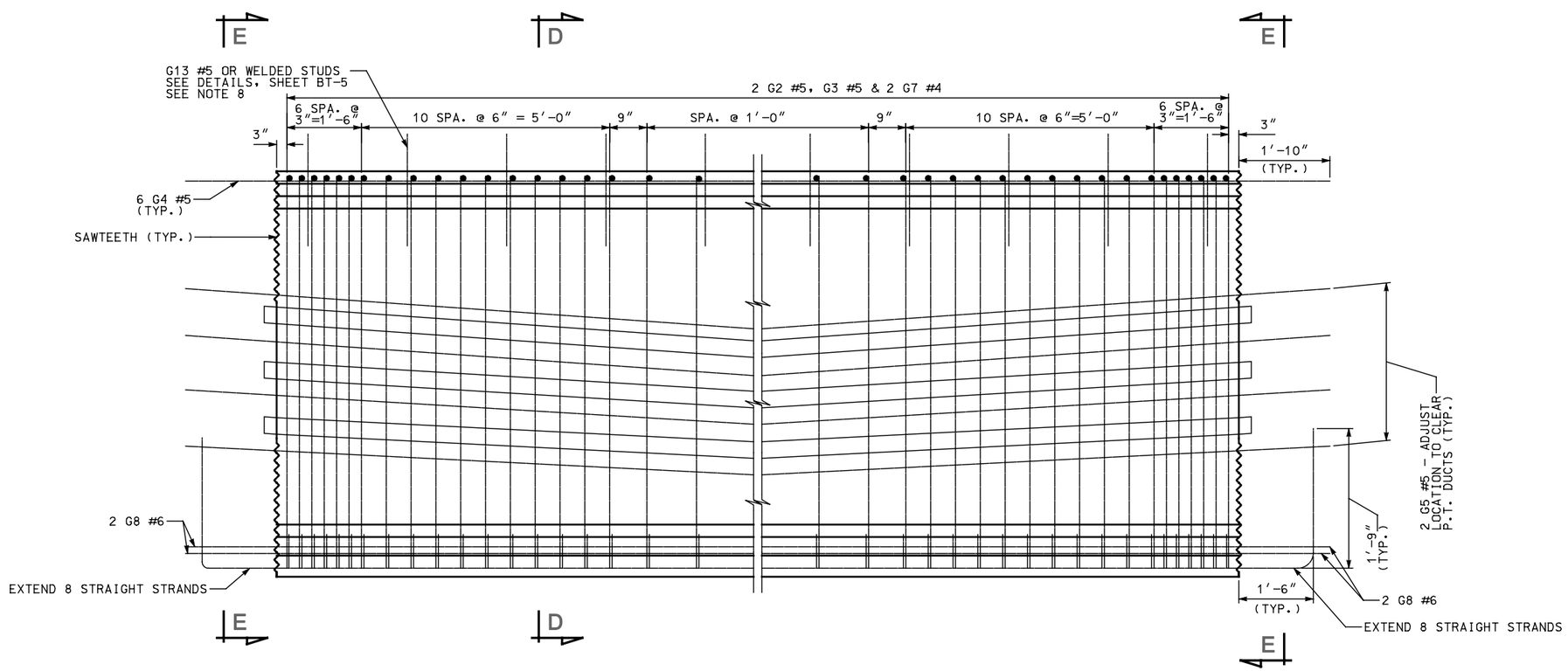

(22) GIRDER ELEVATION MID-SEGMENT REINFORCING

NO.	DATE	BY	REMARKS

REVISIONS

UTAH DEPARTMENT OF TRANSPORTATION
SALT LAKE CITY, UTAH
STRUCTURES DIVISION

DESIGN — CHECK
DRAWN — CHECK
QUANT. — CHECK

APPROVAL RECOMM. — DATE — SENIOR DESIGN ENGR.
APPROVED FOR RELEASE BY UDOT — DATE — UDOT BRIDGE ENGR.

TYPICAL DETAIL SHEET
POST-TENSIONED BULB TEE GIRDER
UBT98PT GIRDER DETAILS 4

PROJECT NUMBER

COUNTY

UBT98PT - 4
DRG. NO.

SHT. OF

UBT98-PT_G4.dgn
4/30/2009