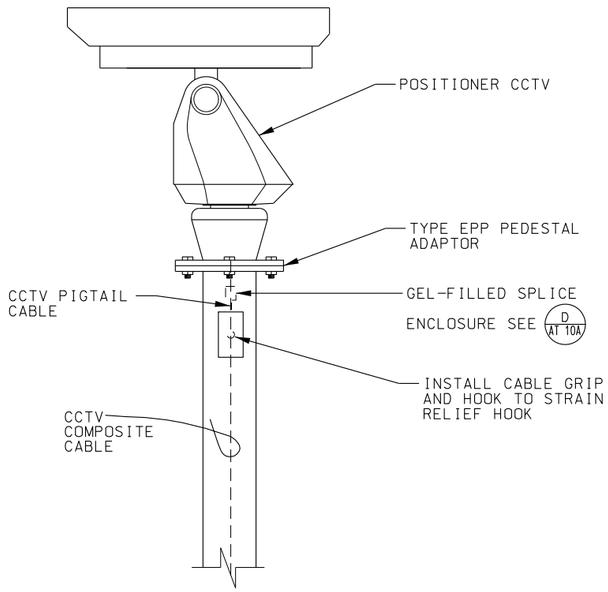

A AT 10A CCTV MOUNTING DETAIL
PEDESTAL MOUNTED POSITIONER CCTV

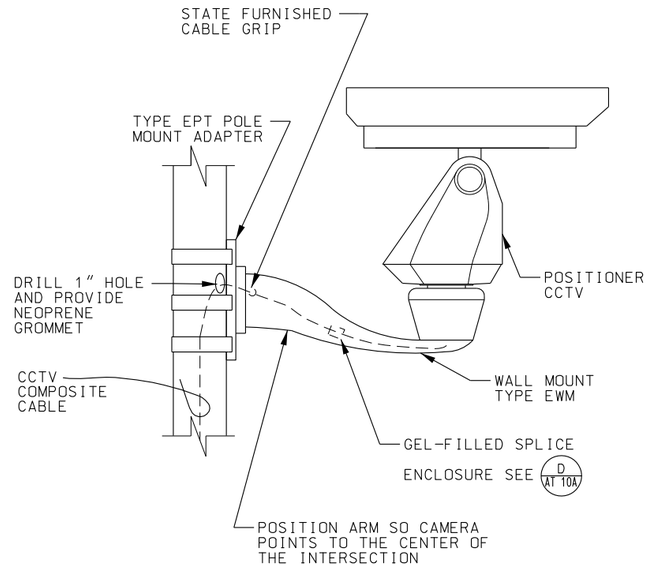

B AT 10A CCTV MOUNTING DETAIL
POLE MOUNTED POSITIONER CCTV

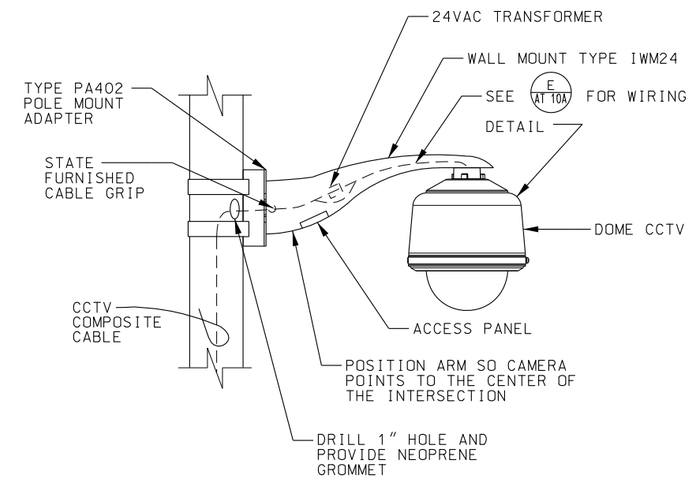

C AT 10A CCTV MOUNTING DETAIL
POLE MOUNTED DOME CCTV

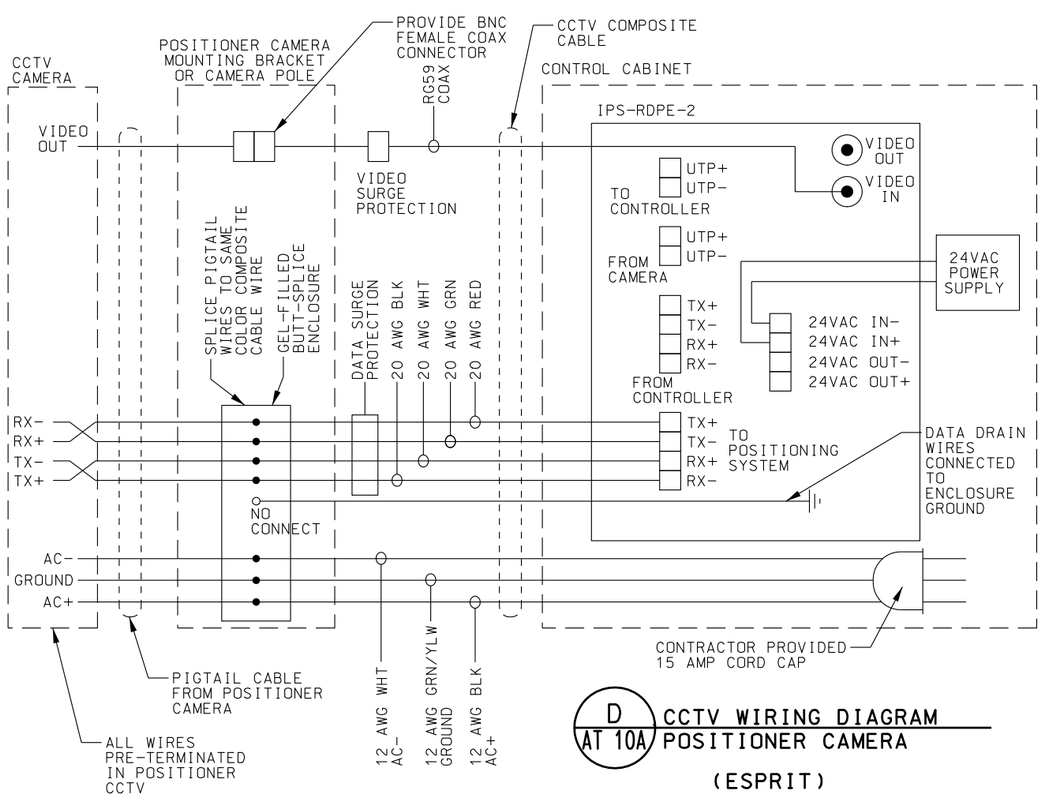

D AT 10A CCTV WIRING DIAGRAM
POSITIONER CAMERA
(ESPRIT)

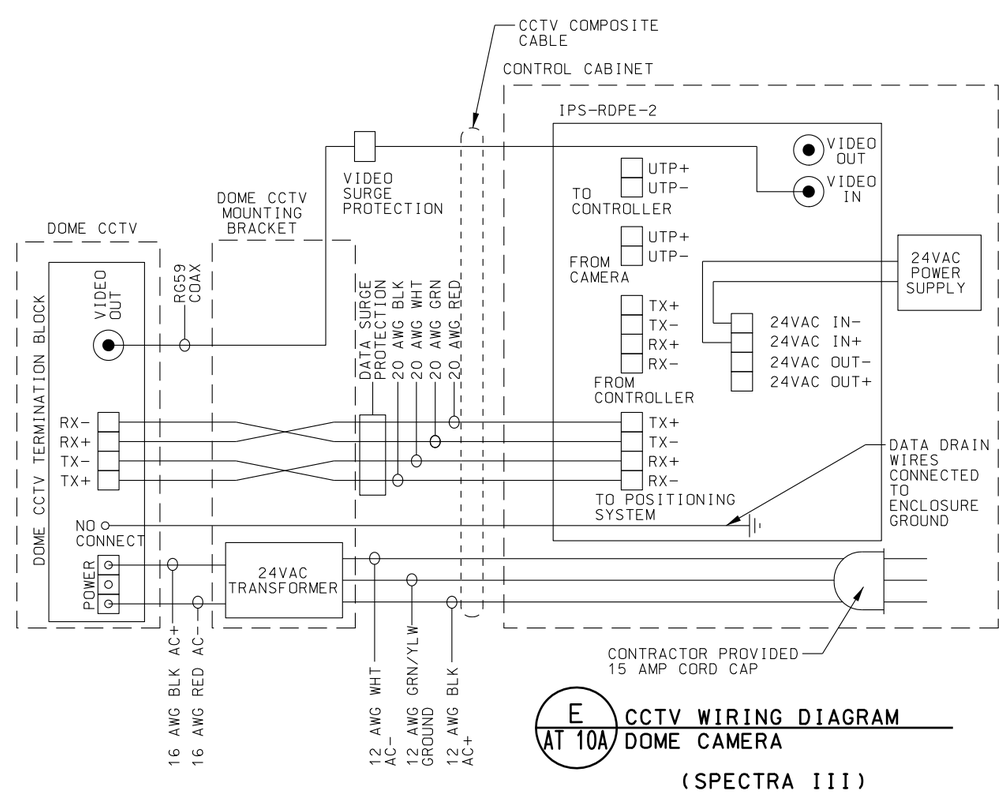

E AT 10A CCTV WIRING DIAGRAM
DOME CAMERA
(SPECTRA III)

NO.	DATE	APPR.	REMARKS

REVISIONS

UTAH DEPARTMENT OF TRANSPORTATION
STANDARD DRAWINGS FOR ROAD AND BRIDGE CONSTRUCTION
SALT LAKE CITY, UTAH

RECOMMENDED FOR APPROVAL — JAN.01,2008 DATE
CHAIRMAN STANDARDS COMMITTEE APPROVED — JAN.01,2008 DATE
DEPUTY DIRECTOR

CCTV MOUNTING DETAILS
STANDARD DRAWING TITLE

STD DWG
AT 10A

DGN File:L:\Standard Drawings\Imperial\2008Approved\Advanced Traffic Management System (ATM)\at10A.dgn

19-DEC-2007