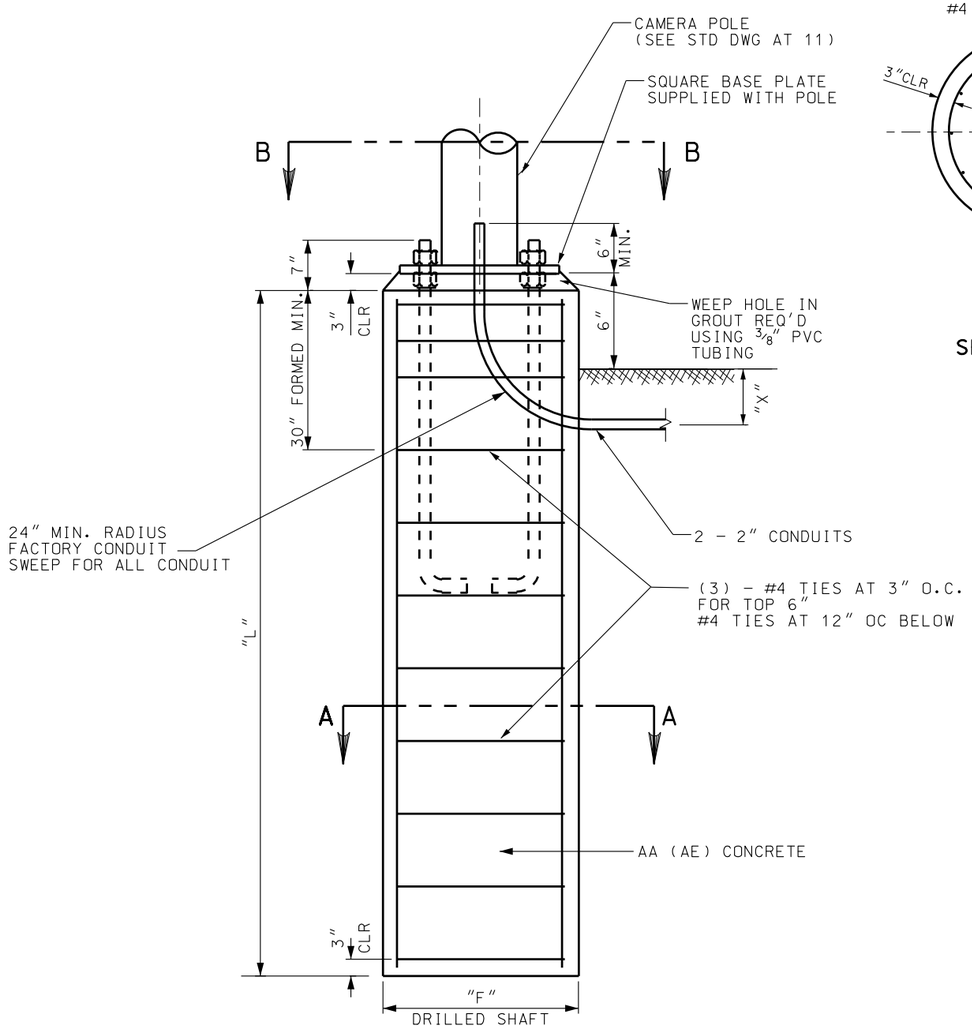

TABLE 1 - CONDUIT DEPTH "X"

18"	IF ENTERING ADJACENT JUNCTION BOX
AS REQUIRED BY TABLE 2 OF AT 6	IF NO ADJACENT JUNCTION BOX WITHIN 20 FEET OF POLE

A AT 12 CCTV POLE FOUNDATION

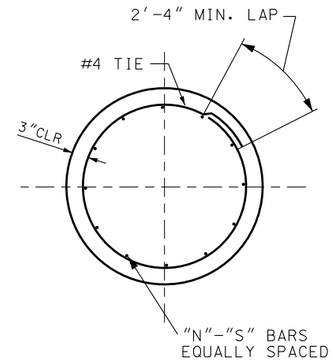

SECTION A-A

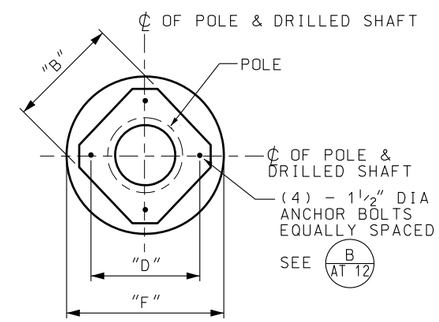

SECTION B-B
FOR 45' POLES

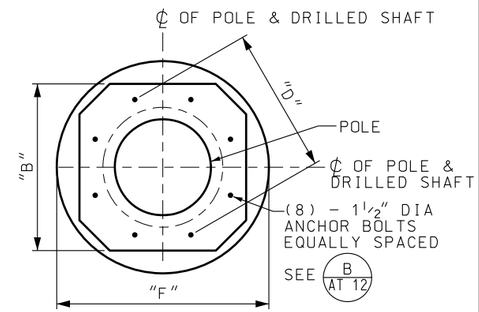

SECTION B-B
FOR 60' & 80' POLES

DRILLED SHAFT FOUNDATION DETAILS

TABLE 2 - POLE FOUNDATION DIMENSIONS

DESCRIPTION	"B"	"D"	"F"	"L"	"N"	"S"
45' NON LOWERING POLE	21.0	21.0	36"	9'-6"	12	#6
45' CAMERA LOWERING POLE	22.0	22.5	36"	10'-0"	12	#6
60' CAMERA LOWERING POLE	33.0	29.0	42"	11'-6"	16	#6
80' CAMERA LOWERING POLE	33.0	29.0	42"	15'-0"	16	#6

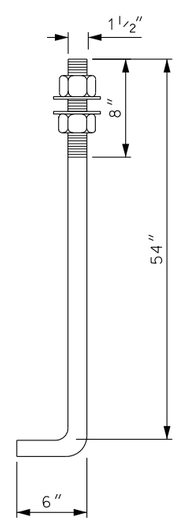

B AT 12 ANCHOR BOLT DETAIL

NOTE:
1. USE STEEL ANCHOR BOLT TEMPLATES, TOP AND BOTTOM.

NO.	DATE	APPR.	REMARKS

REVISIONS

UTAH DEPARTMENT OF TRANSPORTATION
STANDARD DRAWINGS FOR ROAD AND BRIDGE CONSTRUCTION
SALT LAKE CITY, UTAH

RECOMMENDED FOR APPROVAL — JAN.01,2008 DATE
CHAIRMAN STANDARDS COMMITTEE APPROVED — JAN.01,2008 DATE
DEPUTY DIRECTOR

CCTV POLE FOUNDATIONS FOR CCTV POLES
STANDARD DRAWING TITLE

STD DWG
AT 12

DGN File:L:\Standard Drawings\Imperial\2008Approved\Advanced Traffic Management System (ATM)\at12.dgn
18-DEC-2007