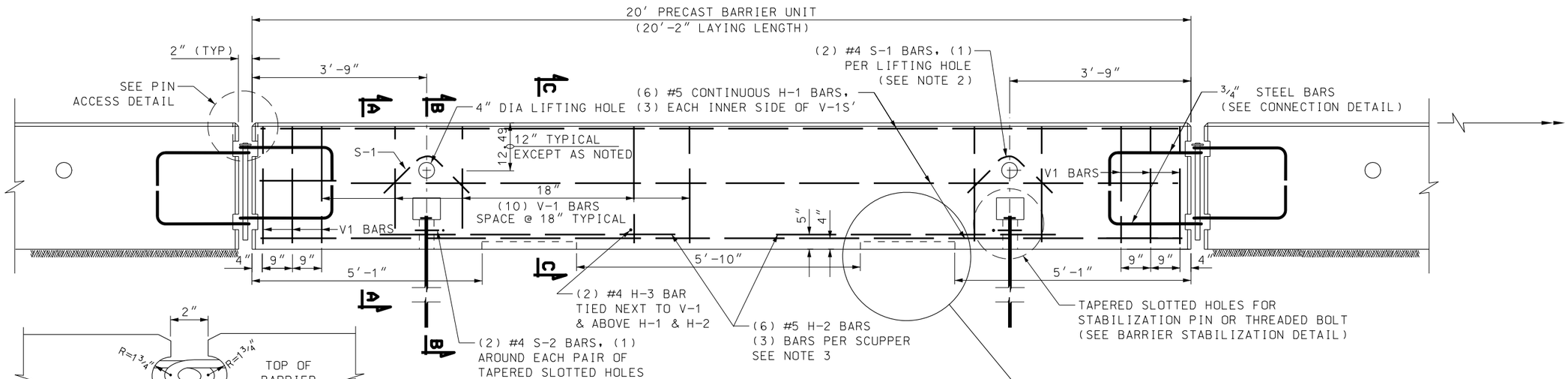

ELEVATION - TYPICAL BARRIER

MASS: 3.9 TONS PER PANEL

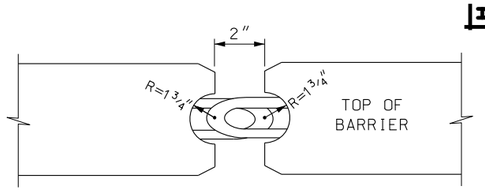

PIN ACCESS DETAIL

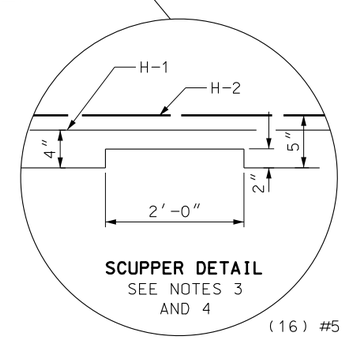

SCUPPER DETAIL
SEE NOTES 3 AND 4

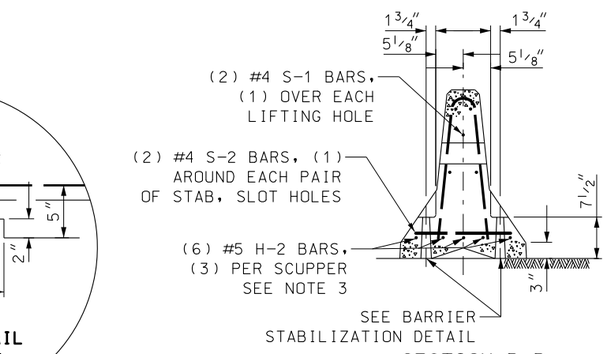

SECTION B-B

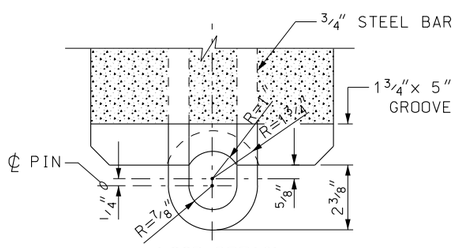

LOOP DETAIL

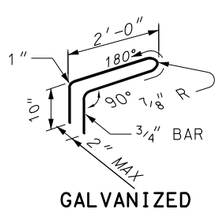

GALVANIZED STEEL BAR

CONNECTION DETAILS

SEE BA 1B FOR PIN DETAILS

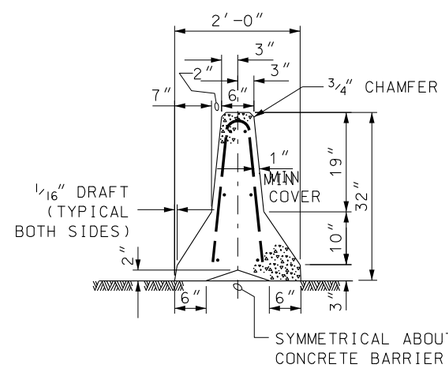

SECTION A-A

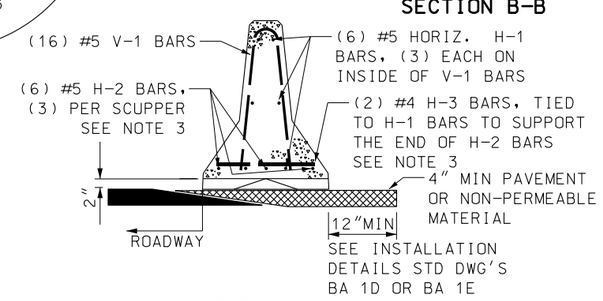

SECTION C-C

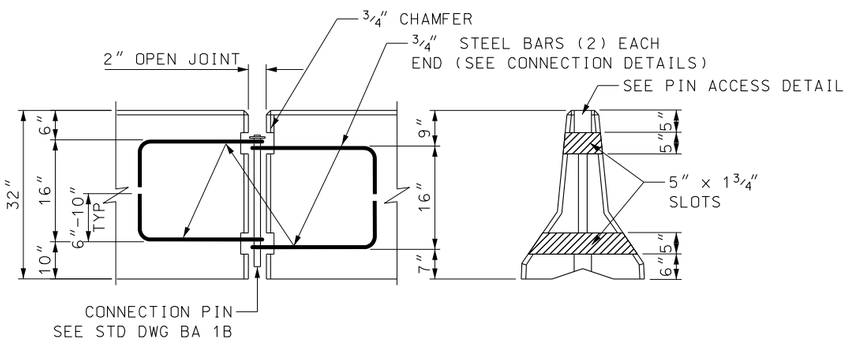

LOOP LOCATION

BARRIER SLOT DETAIL

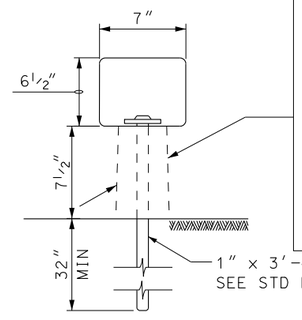

TAPERED SLOTTED HOLE:
$1\frac{1}{4}'' \times 4''$ ON TOP &
$1\frac{1}{2}'' \times 4\frac{1}{4}''$ ON BOTTOM
FOR STABILZATION PIN
OR THREADED BOLT

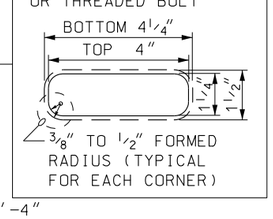

BARRIER STABILIZATION DETAIL

NOTES:

1. SEE STD DWG BA 1B FOR ADDITIONAL REINFORCEMENT STEEL REQUIREMENTS.
2. USE A 4" WHITE PVC SLEEVE TO FORM THE LIFTING HOLES. LEAVE SLEEVE IN PLACE AFTER CASTING.
3. INDICATE ON PLAN SET WHEN BARRIER SECTIONS WITH SCUPPERS ARE REQUIRED.
4. PROVIDE BLOCK OUT AND REINFORCING STEEL FOR SCUPPERS WHEN NOTED ON PLANS.
5. PLACE AN ADEQUATE AMOUNT OF SILICONE ADHESIVE ON BOTTOM OF WASHER BEFORE INSERTING PIN TO HOLD IN PLACE AND PREVENT EASY HAND REMOVAL.

NO.	DATE	APPR.	REMARKS

REVISIONS

UTAH DEPARTMENT OF TRANSPORTATION
STANDARD DRAWINGS FOR ROAD AND BRIDGE CONSTRUCTION
SALT LAKE CITY, UTAH

RECOMMENDED FOR APPROVAL — JAN.01.2008 DATE
CHAIRMAN STANDARDS COMMITTEE APPROVED — JAN.01.2008 DATE
DEPUTY DIRECTOR

PRECAST CONCRETE FULL BARRIER STANDARD SECTION (NEW JERSEY SHAPE)
STANDARD DRAWING TITLE

STD DWG
BA 1A

DGN File:L:\Standard\Drawings\Imperial\2008\Approved\Barriers (BA)\BA01A.dgn
18-DEC-2007