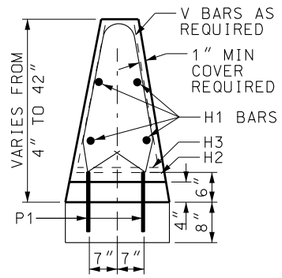

SECTION A-A

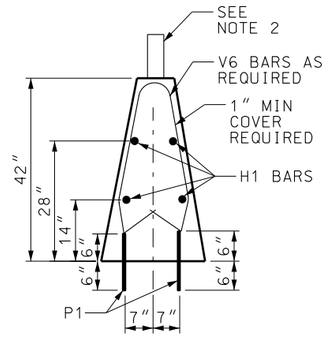

SECTION B-B

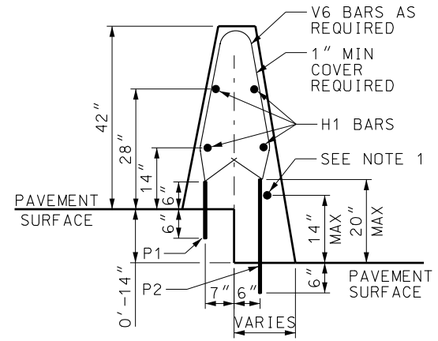

SECTION B-B
STEPPED PAVEMENT

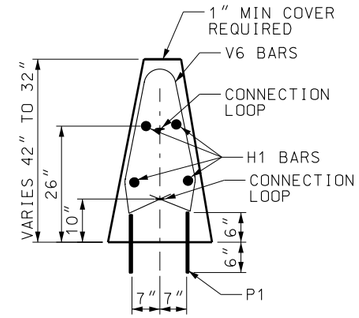

SECTION C-C

REINFORCING STEEL TABLE						
MARK	BAR SIZE	(NO.) OF BARS				SKETCH
H1	#5	4 OR 5 RUN THROUGH LENGTH OF BARRIER REQUIRED SPLICE LENGTH - 45"				
H2	#5	TRAILING END SECTION (B) BOTTOM SIDE				8'-3" / 1'-7"
H3	#5	TRAILING END SECTION (B) TOP SIDE				8'-3" / 6" / 1'-7"
END OPTION		(A)	(B)	(C)	D	
V1	#5	3			28"	
V2	#5	3	1		29"	
V3	#5	3			30"	
V4	#5	2	1		32"	2¼"R / D / 7" / 15" / 9¼"
V5	#5	1			34"	
* V6	#5	2	3	14	36"	
V7	#5		1		25"	
V8	#5		1		22"	
V9	#5		1		20"	
V10	#5		1		18"	
V11	#5		1		16"	
P1	#8	BARRIER TO PAVEMENT				12" LONG PINS @ 24" CENTERS
P2	#8	BARRIER TO PAVEMENT STEPPED PAVEMENT				26" LONG PINS @ 24" CENTERS

* V6 BARS SHOWN IN CHART ARE THE NUMBER OF BARS REQUIRED FOR EACH END OPTION.
SPACE V6 BARS AT 10' INTERVALS THROUGH TYPICAL BARRIER SECTION.

NOTE:

1. ATTACH ADDITIONAL H1 BAR TO P2 BAR WHEN STEPPED PAVEMENT CONFIGURATION REQUIRED.
2. SEE STD DWG GW 9 FOR DELINEATION HARDWARE AND STD DWG GW 10 FOR DELINEATION SPACING.

REVISIONS

NO.	DATE	APPR.	REMARKS

UTAH DEPARTMENT OF TRANSPORTATION
STANDARD DRAWINGS FOR ROAD AND BRIDGE CONSTRUCTION
SALT LAKE CITY, UTAH

RECOMMENDED FOR APPROVAL — JAN.01,2008 DATE
CHAIRMAN STANDARDS COMMITTEE APPROVED — JAN.01,2008 DATE
DEPUTY DIRECTOR

CAST IN PLACE CONSTANT SLOPE BARRIER
STANDARD DRAWING TITLE

STD DWG
BA 3A2

DGN File:L:\Standard Drawings\Imperial\2008Approved\Barriers (BA)\BA03A2.dgn
18-DEC-2007