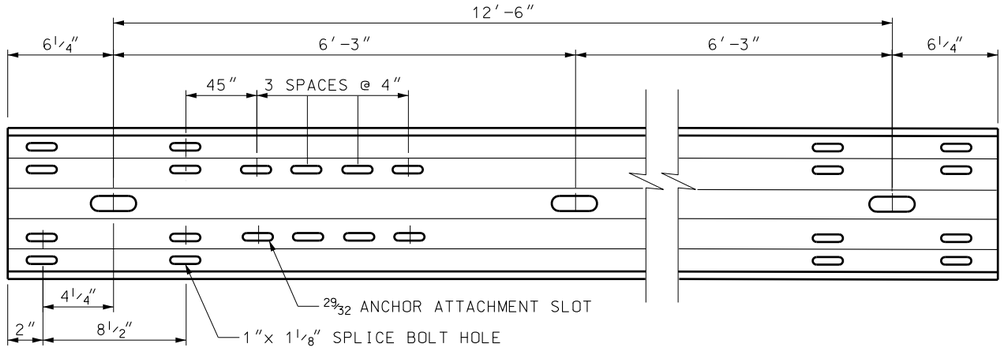

RAIL ELEMENT

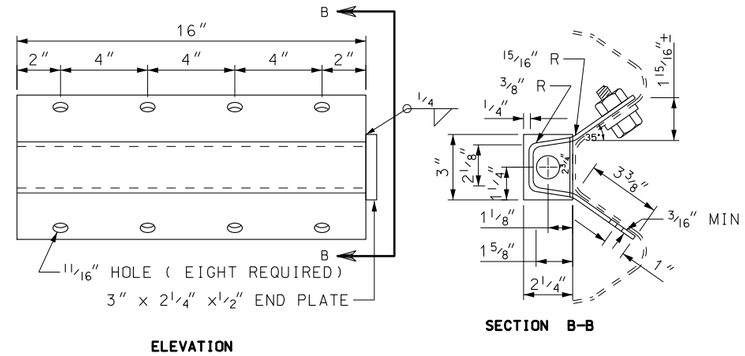

ELEVATION

SECTION B-B

ANCHOR PLATE

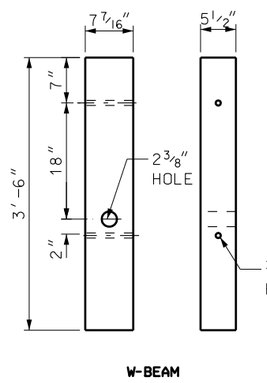

W-BEAM

WOOD BREAKAWAY POST

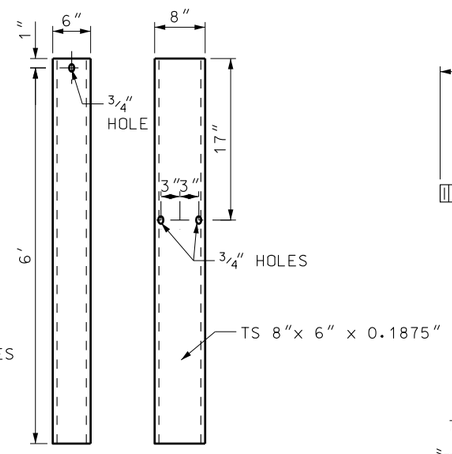

FOUNDATION TUBE

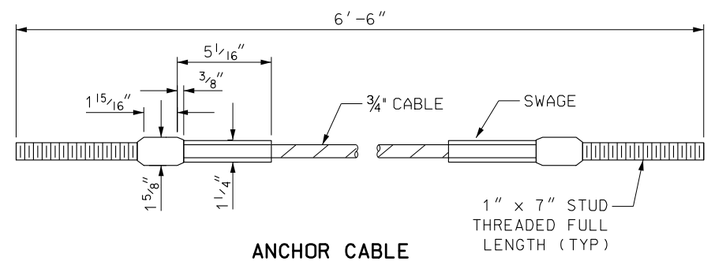

ANCHOR CABLE

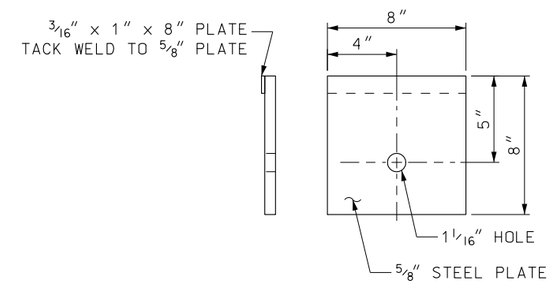

NOTE:
INSTALL BEARING PLATE WITH 5″ PORTION UP. SECURE PLATE TO POST USING TWO NAILS AT TOP OF PLATE.

BEARING PLATE

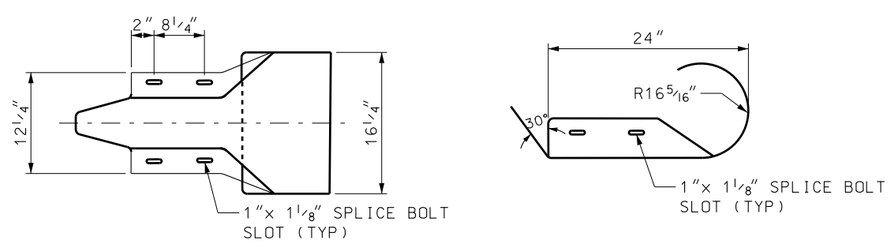

END SECTION (ROUNDED)

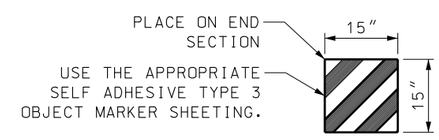

DELINEATION SHEETING

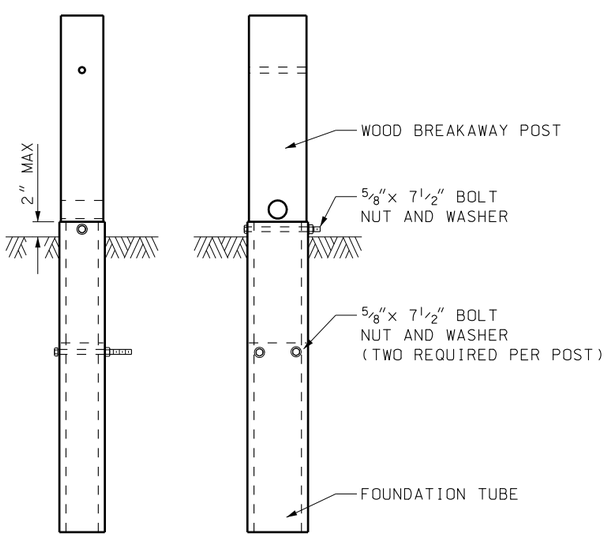

ANCHOR POST ASSEMBLY

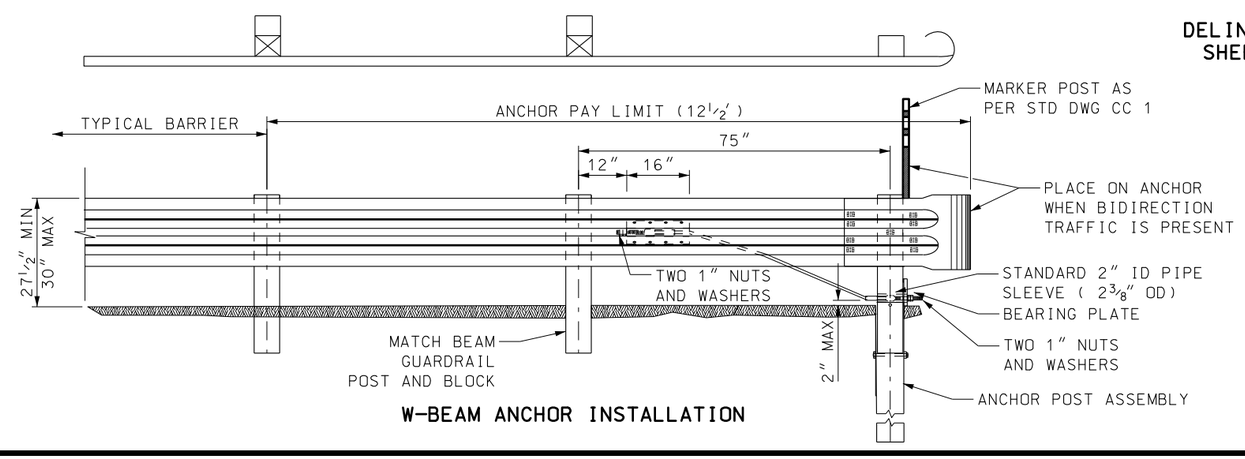

W-BEAM ANCHOR INSTALLATION

NO.	DATE	APPR.	REMARKS

REVISIONS

UTAH DEPARTMENT OF TRANSPORTATION
STANDARD DRAWINGS FOR ROAD AND BRIDGE CONSTRUCTION
SALT LAKE CITY, UTAH

RECOMMENDED FOR APPROVAL — JAN.01,2008 DATE
CHAIRMAN STANDARDS COMMITTEE APPROVED — JAN.01,2008 DATE
DEPUTY DIRECTOR

W-BEAM GUARDRAIL
ANCHOR
TYPE I

STANDARD DRAWING TITLE

STD DWG
BA 4D

DGN File:L:\Standard\Drawings\Imperial\2008\Approved\Barriers (BA)\BA04D.dgn
18-DEC-2007