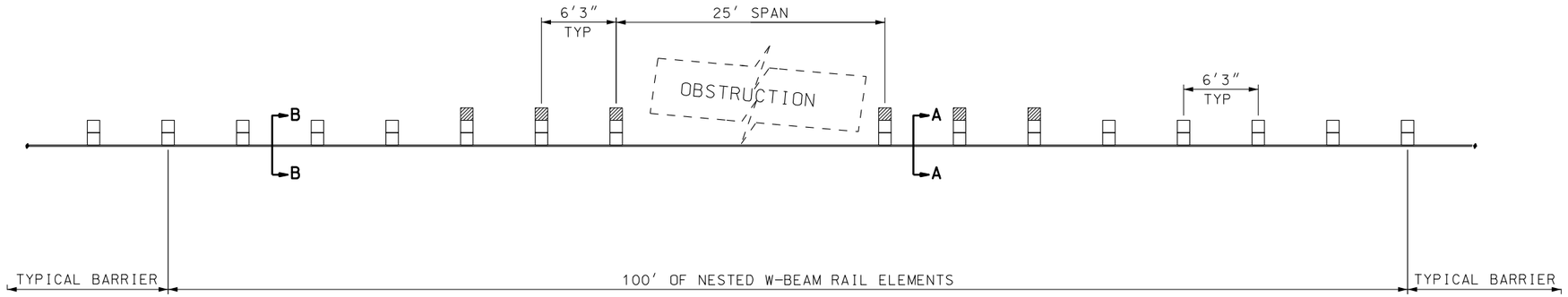

PLAN

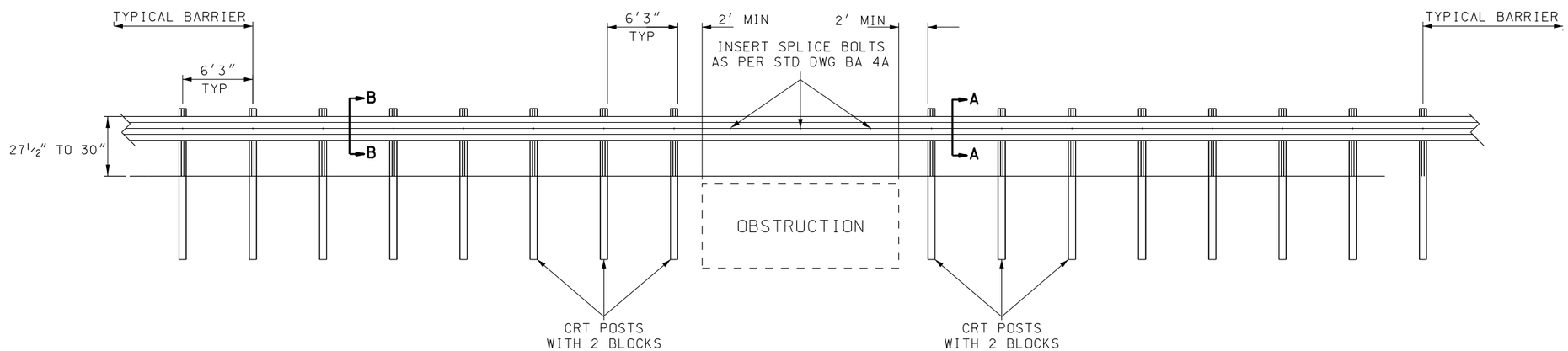

ELEVATION

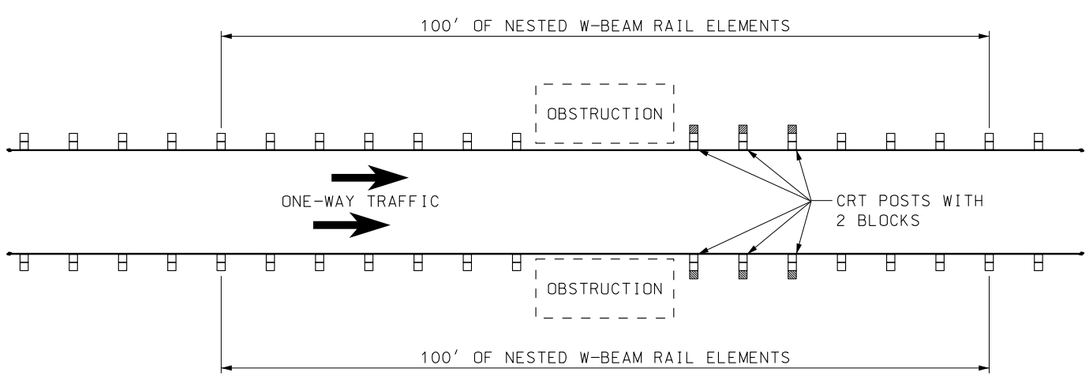

ONE-WAY TRAFFIC LAYOUT

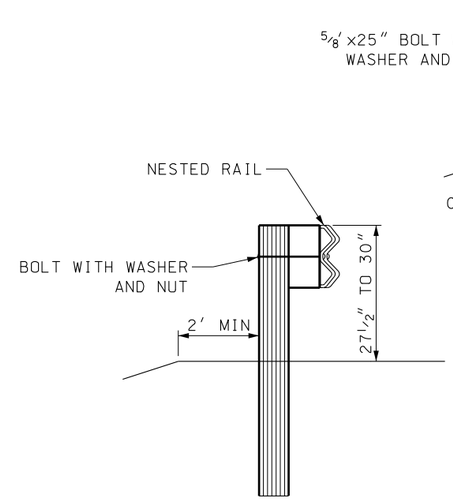

B–B

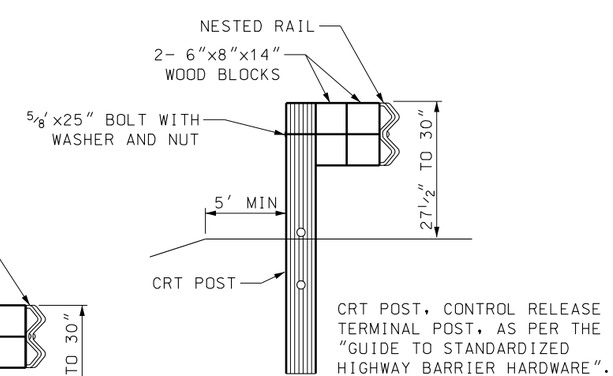

A–A

NO.	DATE	APPR.	REMARKS

REVISIONS

UTAH DEPARTMENT OF TRANSPORTATION
STANDARD DRAWINGS FOR ROAD AND BRIDGE CONSTRUCTION
SALT LAKE CITY, UTAH

RECOMMENDED FOR APPROVAL — JAN.01,2008 DATE
CHAIRMAN STANDARDS COMMITTEE APPROVED — JAN.01,2008 DATE
DEPUTY DIRECTOR

W-BEAM GUARDRAIL
NESTED GUARDRAIL
25' SPAN
STANDARD DRAWING TITLE

STD DWG
BA 40

DGN File:L:\Standard Drawings\Imperial\2008Approved\Barriers (BA)\BA040.dgn
18-DEC-2007