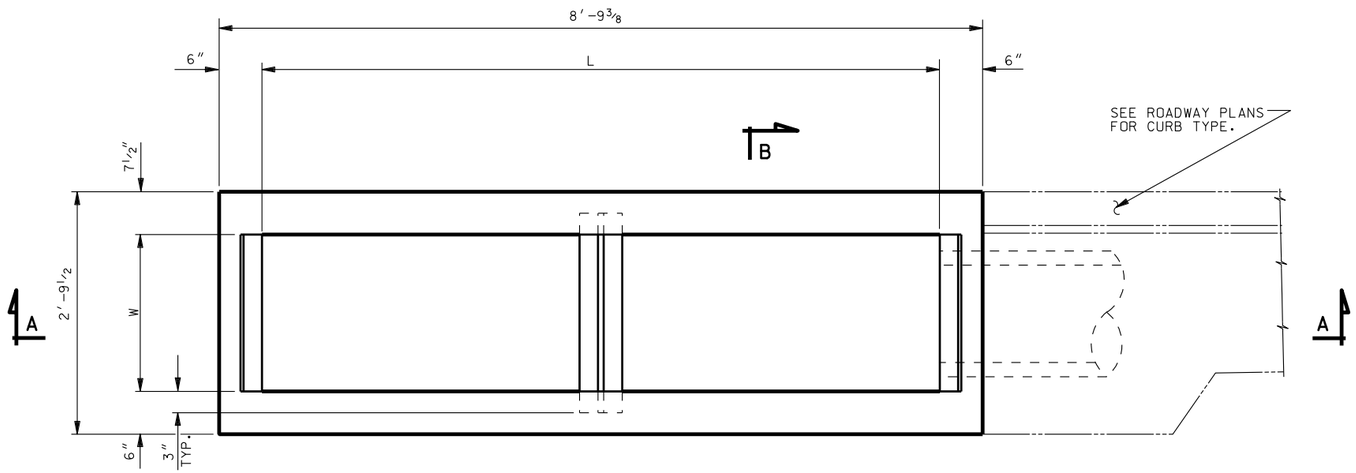

PLAN

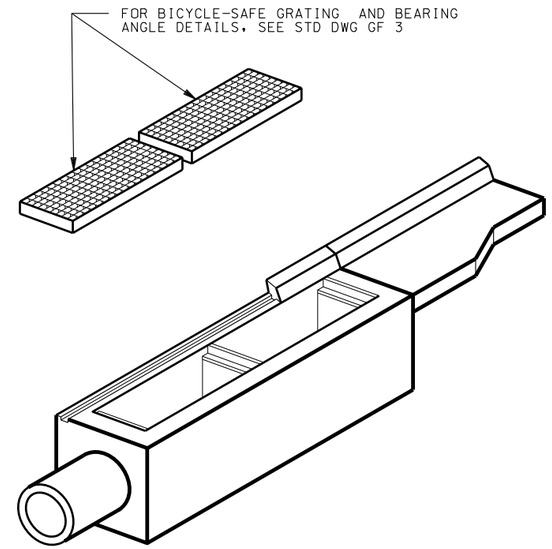

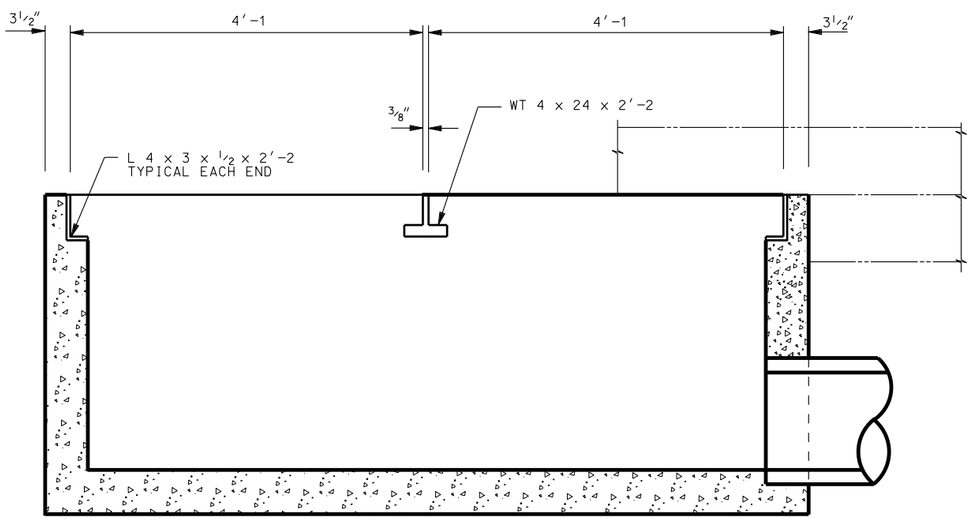

SECTION A–A

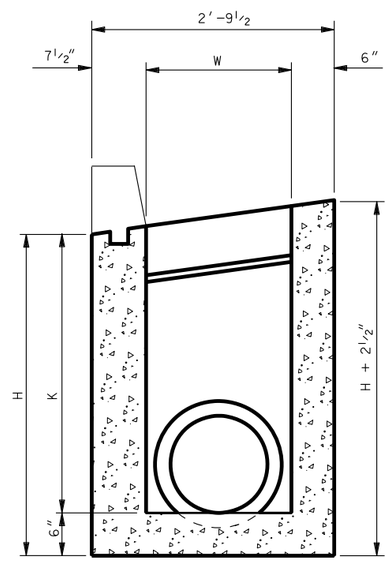

SECTION B–B

NOTES:

1. USE COATED DEFORMED REINFORCING STEEL BARS CONFORMING TO AASHTO M 284 OR M 111 AND M 31 GRADE 60 RESPECTIVELY.
2. FIELD CUT AND BEND REINFORCING STEEL AS NECESSARY TO CLEAR PIPES AND MAINTAIN 2″ COVER. REPAIR ANY DAMAGE OR CUTS TO THE EPOXY COATING ON REINFORCING BARS.
3. USE CLASS AA (AE) CONCRETE.
4. USE TYPE II CEMENT (LOW ALKALI).
5. PROVIDE 2″ CONCRETE COVER TO REINFORCING STEEL.
6. FOR NUMBER, LOCATION, AND SIZE OF PIPE SEE ROADWAY PLANS.
7. PROVIDE 3/4″ CHAMFER ON ALL EXPOSED CONCRETE CORNERS.
8. FOR GRATE AND FRAME SEE STD DWG GF 3.
9. HOT-DIP GALVANIZE GRATING AND BEARING ANGLES AFTER FABRICATION IN ACCORDANCE WITH AASHTO DESIGNATION M 111 (ASTM 123).

DESIGN DATA

HS 20 STANDARD SPECIFICATION FOR HIGHWAY BRIDGES 17™ EDITION.

STRUCTURAL STEEL Fy = 36,000 psi

STRUCTURAL CONCRETE f′c = 4,000 psi
Fy = 60,000 psi
n = 8

REVISIONS

NO.	DATE	APPR.	REMARKS

UTAH DEPARTMENT OF TRANSPORTATION
STANDARD DRAWINGS FOR ROAD AND BRIDGE CONSTRUCTION
SALT LAKE CITY, UTAH

RECOMMENDED FOR APPROVAL — JAN.01,2008 DATE
CHAIRMAN STANDARDS COMMITTEE APPROVED — JAN.01,2008 DATE
DEPUTY DIRECTOR

STANDARD DRAWING TITLE
DOUBLE CATCH BASIN

STD DWG
CB 8A

DGN File:L:\Standard Drawings\Imperial\2008Approved\Catch Basins and Cleanouts (CB)\CB08a.dgn
18-DEC-2007