SCHEDULE OF INSTALLATION

LINE NO	DIMENSIONS				MAXIMUM PIPE DIA.		REINFORCING STEEL												QUANTITIES		
							A		B		C		D		E		F		REINFORCING STEEL	CONCRETE	STRUCTURAL STEEL
	H	W	L	K	R.C.P.	C.M.P.	N	LENGTH	N	LENGTH	N	LENGTH	N	LENGTH	N	LENGTH	N	LENGTH	LBS.	CUBIC YARD	LBS.
1	2'-0	1'-8	7'-9⅜	1'-6	----	15"	7	8'-6	13	2'-5	9	1'-9	2	1'-8	9	2'-0	1	11'-0	145.0	1.14	594.0
2	2'-6	1'-8	7'-9⅜	2'-0	12"	18"	9	8'-6	15	2'-5	9	2'-3	2	2'-2	9	2'-6	1	11'-0	178.2	1.33	594.0
3	3'-0	1'-8	7'-9⅜	2'-6	15"	18"	9	8'-6	15	2'-5	9	2'-9	2	2'-8	9	3'-0	1	11'-0	188.6	1.52	594.0
4	3'-6	1'-8	7'-9⅜	3'-0	18"	18"	11	8'-6	17	2'-5	9	3'-3	2	3'-2	9	3'-6	1	11'-0	221.8	1.71	594.0
5	4'-0	1'-8	7'-9⅜	3'-6	18"	18"	11	8'-6	17	2'-5	9	3'-9	2	3'-8	9	4'-0	1	11'-0	232.2	1.90	594.0

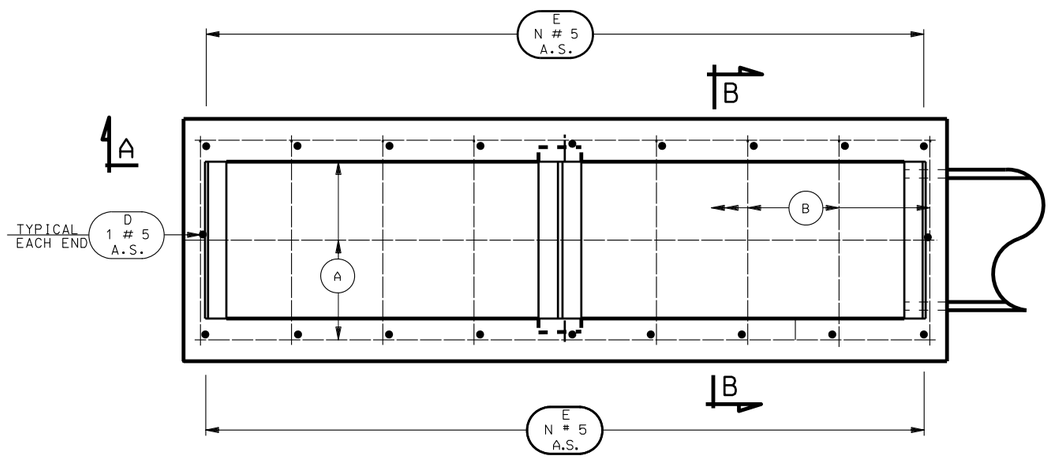

PLAN VIEW

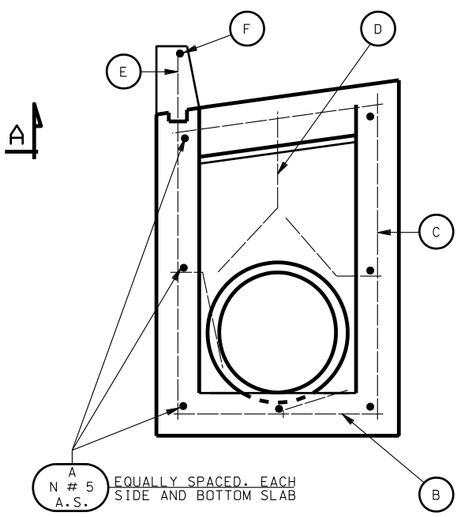

SECTION B-B

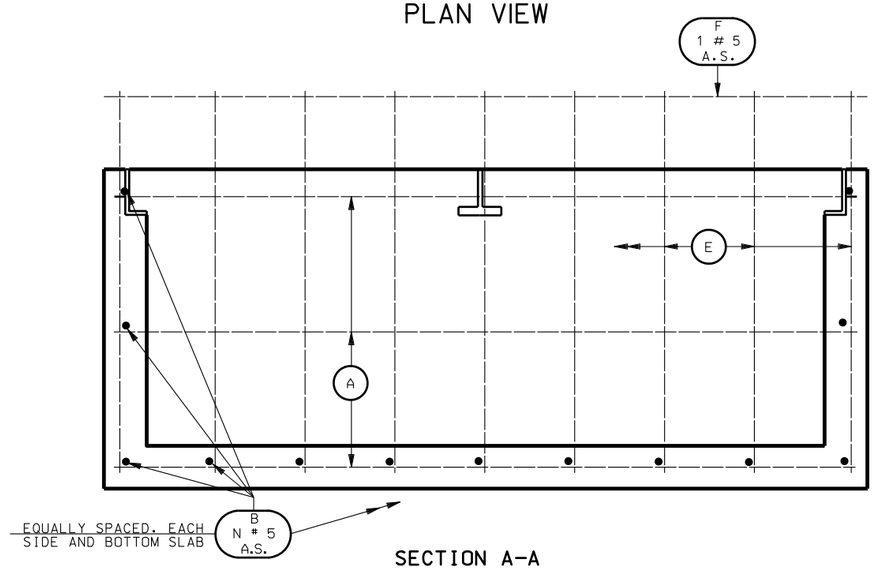

SECTION A-A

TABLE "A"

R.C.P.		C.M.P.	
DIA.	CU. YDS.	DIA.	CU. YDS.
12"	0.023	12"	0.015
15"	0.031	15"	0.023
18"	0.041	18"	0.033

NOTES:

1. INCLUDE CONCRETE QUANTITIES FOR CURB AND GUTTER IN ROADWAY QUANTITIES.
2. DEDUCT CONCRETE DISPLACED BY PIPE(S), TABLE "A," FROM CONCRETE QUANTITIES GIVEN IN SCHEDULE OF INSTALLATION.
3. CUT AND BEND REINFORCING STEEL AS NECESSARY TO CLEAR PIPE(S) AND MAINTAIN 2" CLEARANCE.

REVISIONS

NO.	DATE	APPR.	REMARKS

UTAH DEPARTMENT OF TRANSPORTATION
STANDARD DRAWINGS FOR ROAD AND BRIDGE CONSTRUCTION
SALT LAKE CITY, UTAH

RECOMMENDED FOR APPROVAL — JAN.01,2008 DATE
CHAIRMAN STANDARDS COMMITTEE APPROVED — JAN.01,2008 DATE
DEPUTY DIRECTOR

DOUBLE CATCH BASIN

STANDARD DRAWING TITLE

STD DWG
CB 8B

DGN File:L:\Standard.Drawings\Imperial\2008Approved\Catch Basins and Cleanouts (CB)\CB08b.dgn
18-DEC-2007