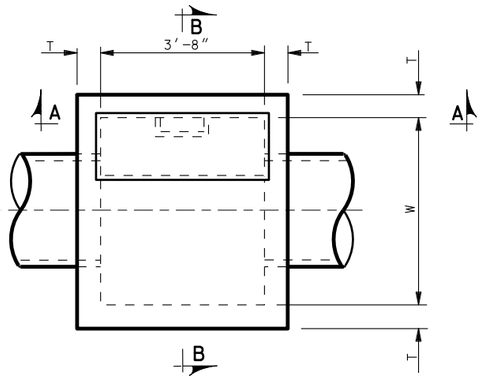

PLAN

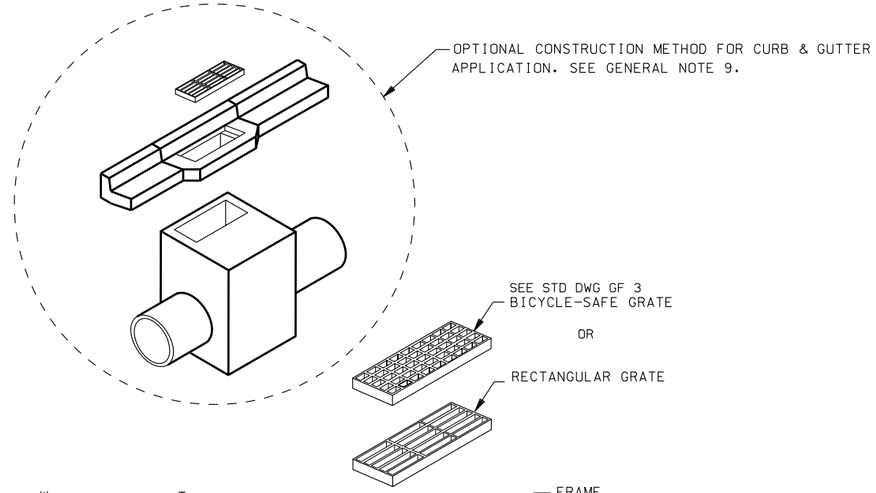

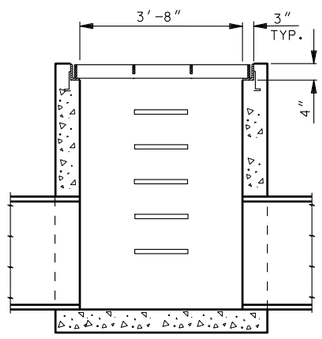

SECTION A-A

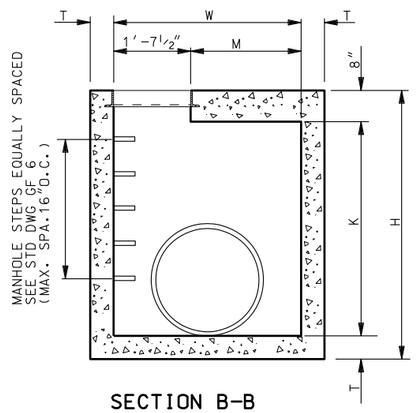

SECTION B-B

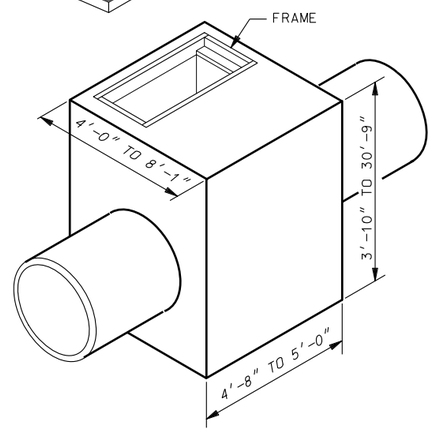

CATCH BASIN

GRATE AND FRAME APPLICATION

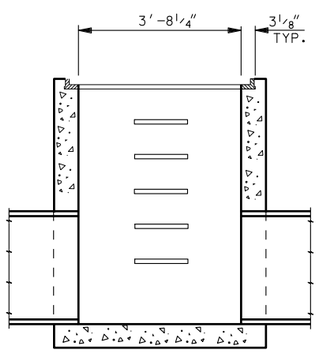

SECTION A-A

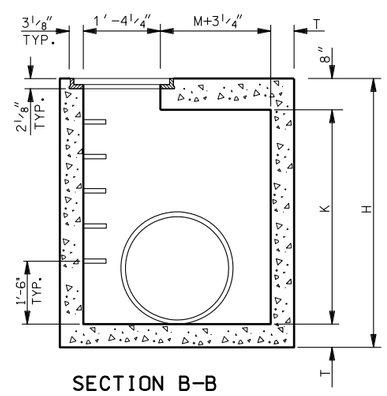

SECTION B-B

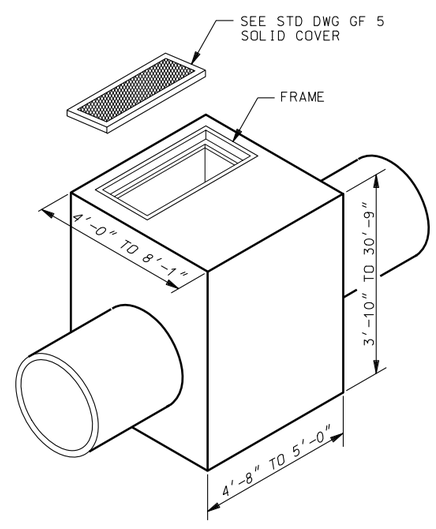

CLEANOUT BOX

SOLID COVER APPLICATION

NOTES:

1. USE COATED DEFORMED REINFORCING STEEL BARS CONFORMING TO AASHTO M 284 OR M 111 AND M 31 GRADE 60 RESPECTIVELY.
2. FIELD CUT AND BEND REINFORCING STEEL AS NECESSARY TO CLEAR PIPES AND MAINTAIN 2" COVER. REPAIR ANY DAMAGE OR CUTS TO THE EPOXY COATING ON REINFORCING BARS.
3. USE CLASS AA (AE) CONCRETE.
4. USE TYPE II CEMENT (LOW ALKALI).
5. PROVIDE 2" CONCRETE COVER TO REINFORCING STEEL.
6. PROVIDE ¾" CHAMFER ON ALL EXPOSED CONCRETE CORNERS.
7. FOR GRATE AND FRAME SEE STD GF 3 AND GF 5.
8. FOR NUMBER, LOCATION, AND SIZE OF PIPE SEE ROADWAY PLANS.
9. FOR CURB AND GUTTER APPLICATION SEE STD DWG CB 1 AND CB 2 FOR BOX ELEVATIONS. INCLUDE CONCRETE QUANTITIES FOR CURB AND GUTTER IN ROADWAY QUANTITIES.

DESIGN DATA

HS 20 STANDARD SPECIFICATION FOR HIGHWAY BRIDGES 17™ EDITION.

STRUCTURAL STEEL Fs = 20,000 psi

STRUCTURAL CONCRETE fc = 1,400 psi
Fs = 24,000 psi
n = 8

INDEX OF SHEETS

A- SITUATION & LAYOUT
B- SECTION DETAILS
C- SCHEDULE OF INSTALLATION FOR 18"-42" RCP. 12"-48" CMP.
D- SCHEDULE OF INSTALLATION FOR 48"-66" RCP. 60"-78" CMP.

REVISIONS

NO.	DATE	APPR.	REMARKS

UTAH DEPARTMENT OF TRANSPORTATION
STANDARD DRAWINGS FOR ROAD AND BRIDGE CONSTRUCTION
SALT LAKE CITY, UTAH

RECOMMENDED FOR APPROVAL — JAN.01,2008 DATE
CHAIRMAN STANDARDS COMMITTEE
APPROVED — JAN.01,2008 DATE
DEPUTY DIRECTOR

STANDARD CATCH BASIN AND CLEANOUT BOX SITUATUON AND LAYOUT

STANDARD DRAWING TITLE

STD DWG
CB 9A

DGN File:L:\Standard Drawings\Imperial\2008\Approved\Catch Basins and Cleanouts (CB)\CB09a.dgn
18-DEC-2007