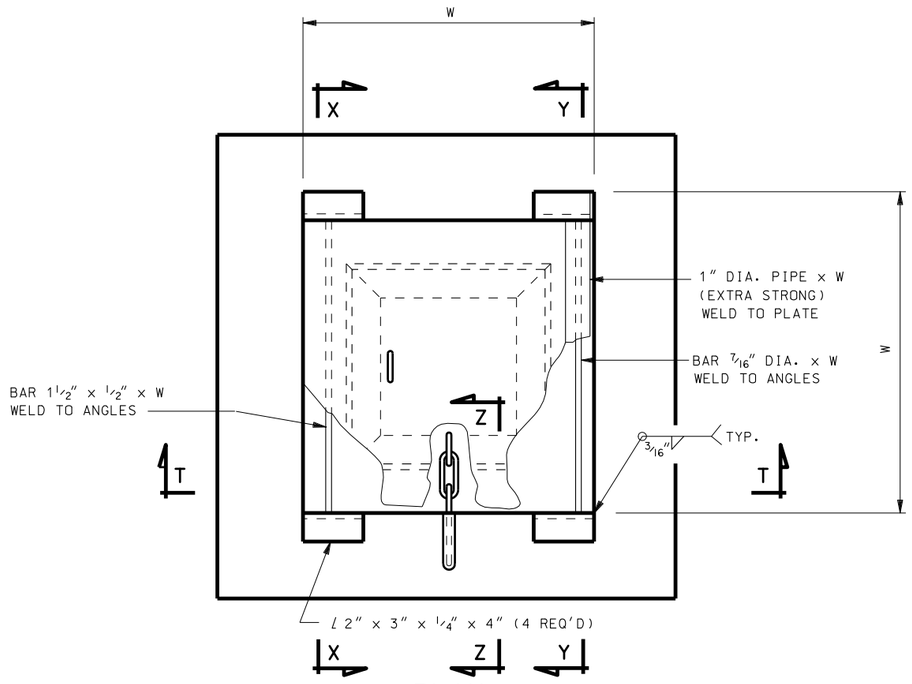

PLAN

DETAILS OF SHEET COVER PLATE
(SECTION Z-Z IS ON STD DWG DB 1C)

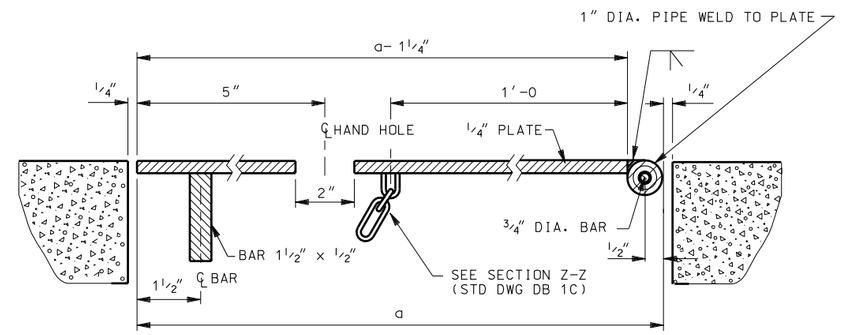

SECTION T-T

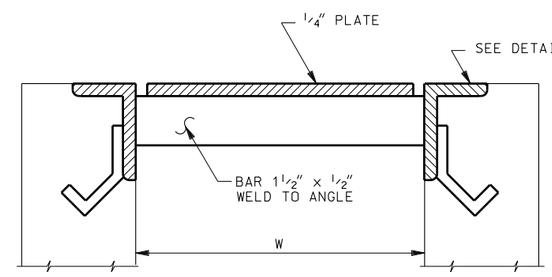

SECTION X-X

SECTION Y-Y

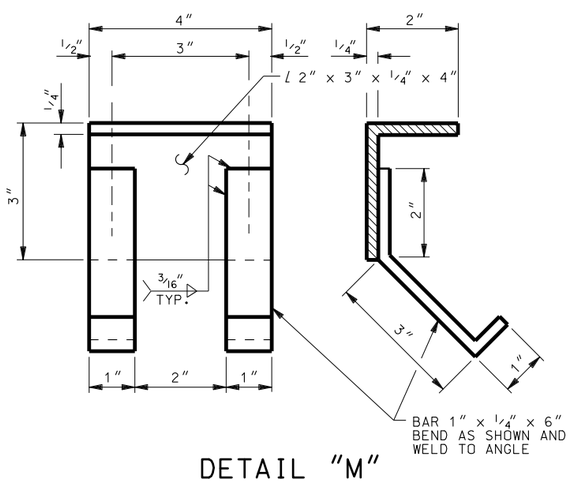

DETAIL "M"
HINGED LID DETAILS

DIMENSION & QUANTITIES
(SEE SCHEDULE ON STD DWG DB 1D)

NO.	DATE	APPR.	REMARKS

REVISIONS

UTAH DEPARTMENT OF TRANSPORTATION
STANDARD DRAWINGS FOR ROAD AND BRIDGE CONSTRUCTION
SALT LAKE CITY, UTAH

RECOMMENDED FOR APPROVAL — JAN.01,2008 DATE
CHAIRMAN STANDARDS COMMITTEE
APPROVED — JAN.01,2008 DATE
DEPUTY DIRECTOR

STANDARD DIVERSION
BOX HINGED LID
DETAILS FOR
18" DIA. OR 24" DIA.PIPE

STANDARD DRAWING TITLE

STD DWG
DB 1B

DGN File:L:\Standard Drawings\Imperial\2008approved\Diversion Boxes (DB)\DB01B.dgn
18-DEC-2007