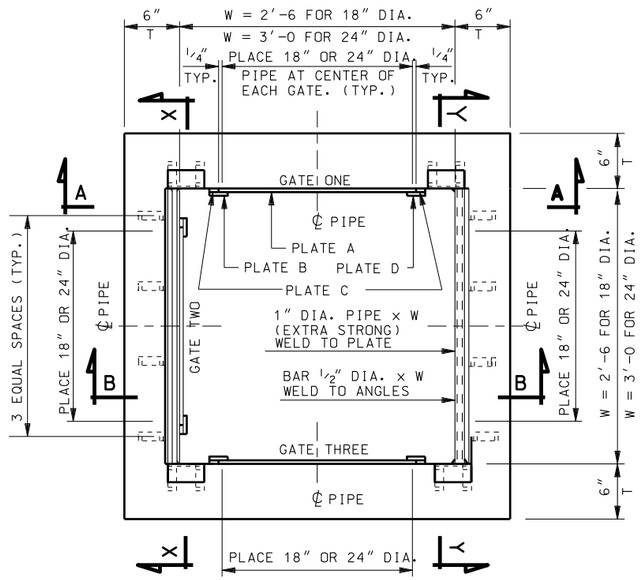

3 GATE PLAN

(SECTION X-X Y-Y & B-B ARE ON STD DWG DB 1F)

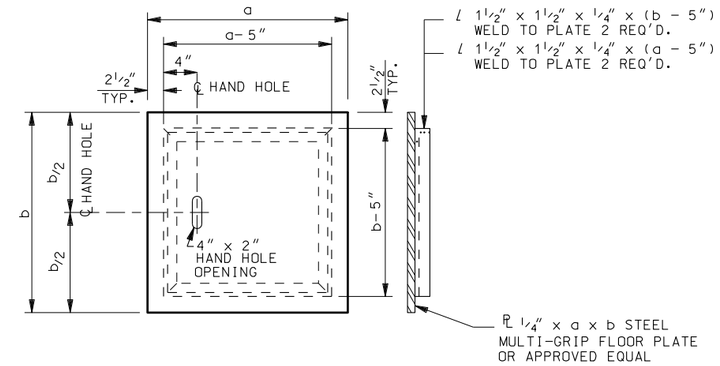

STEEL COVER PLATE DETAILS

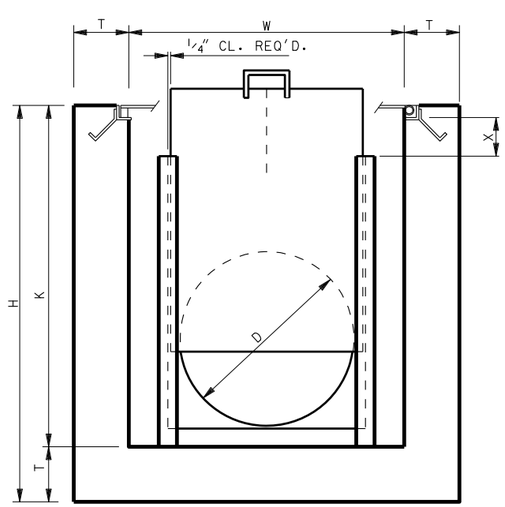

SECTION A-A

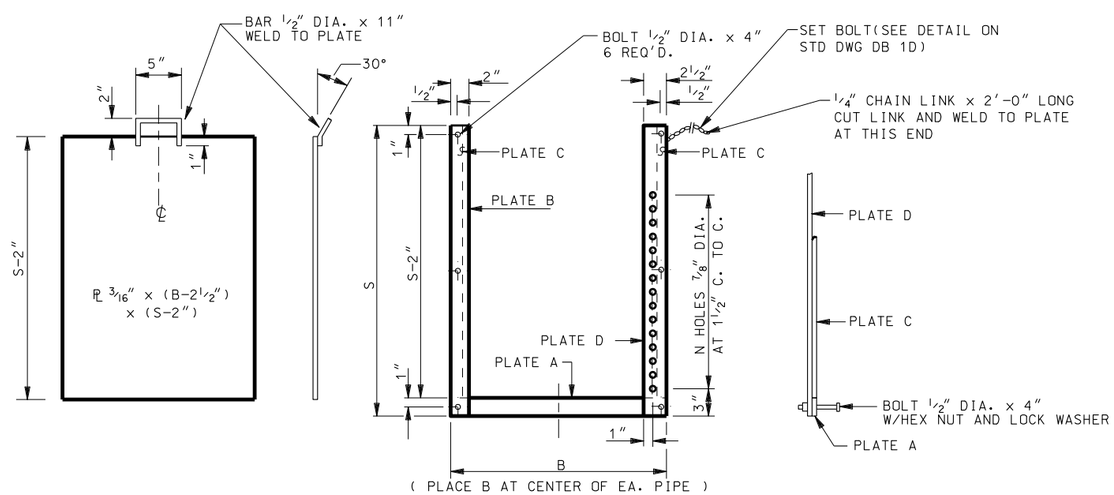

FRAME AND GATE INSTALLATION DETAIL DIMENSIONS AND QUANTITIES

SEE SCHEDULES ON STD DWG DB 1F

REVISIONS

NO.	DATE	APPR.	REMARKS

UTAH DEPARTMENT OF TRANSPORTATION
STANDARD DRAWINGS FOR ROAD AND BRIDGE CONSTRUCTION
SALT LAKE CITY, UTAH

RECOMMENDED FOR APPROVAL — JAN.01,2008 DATE
CHAIRMAN STANDARDS COMMITTEE APPROVED — JAN.01,2008 DATE
DEPUTY DIRECTOR

STANDARD DIVERSION BOX THREE GATE BOX SECTIONS FOR 18" DIA. OR 24" DIA.PIPE

STANDARD DRAWING TITLE

STD DWG
DB 1E

DGN File:L:\Standard Drawings\Imperial\2008Approved\Diversion Boxes (DB)\DB01E.dgn
18-DEC-2007