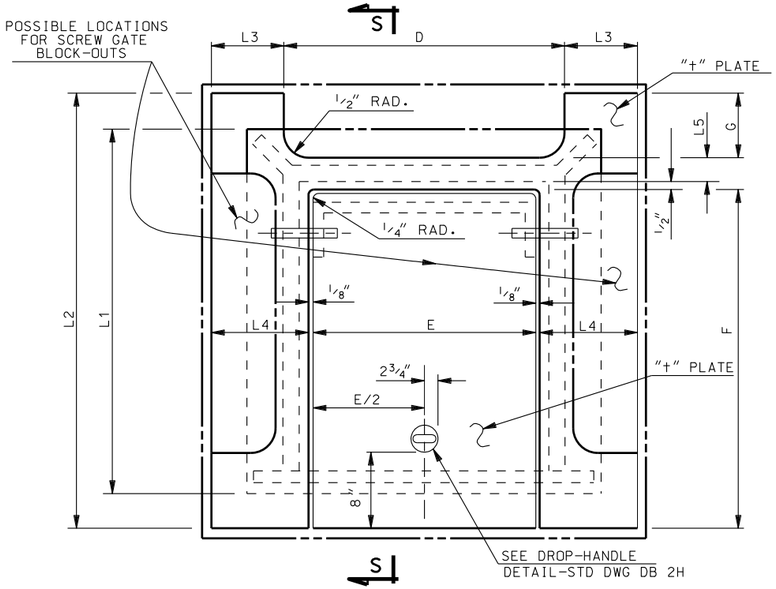

SOLID COVER TYPE "A" DETAILS
PLAN

SOLID COVER TYPE "A" SUB-FRAME TYPE II DIMENSIONS

LINE NO.	SCREW GATE		WALL SIZE	BLOCK-OUT		HINGED LID			COVER PLATE					SUB-FRAME TYPE II				
	A	B	L1	D	G	E	F	+	L2	+	L3	L4	L5	L6	L7	L8	L9	L10
1	18	18	2'-6	1'-10 1/4	8 1/2"	1'-8 1/4	2'-6 1/2	1/4"	3'-5	1/4"	9 3/8"	10 1/4"	1 1/2"	2'-5 1/2	4 3/4"	2'-0 1/2	4 1/4"	1'-11 1/2
2	24	24	3'-0	2'-4 1/4	8 1/2"	2'-2 1/4	3'-0 1/2	1/4"	3'-11	1/4"	9 3/8"	10 1/4"	1 1/2"	2'-11 1/2	4 3/4"	2'-6 1/4	4 1/2"	2'-5 1/8
3	30	30	3'-10	2'-11 1/4	8 1/2"	2'-6	3'-10 1/2	1/4"	4'-9	1/4"	10 1/8"	1'-1 3/8	1 1/2"	3'-9 1/2	7 1/8"	3'-4 1/4	4 1/2"	3'-3 1/8

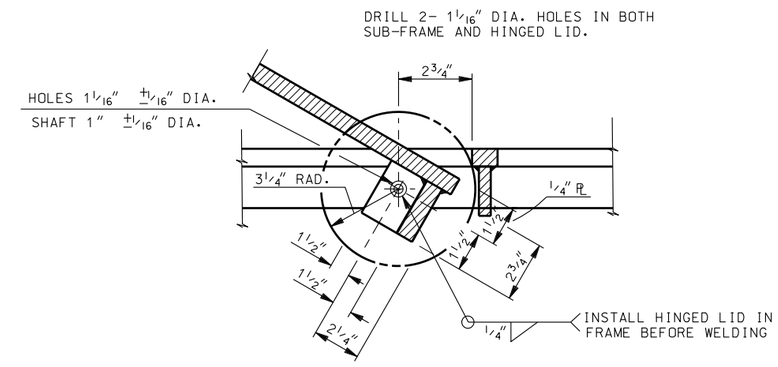

ENLARGEMENT Y

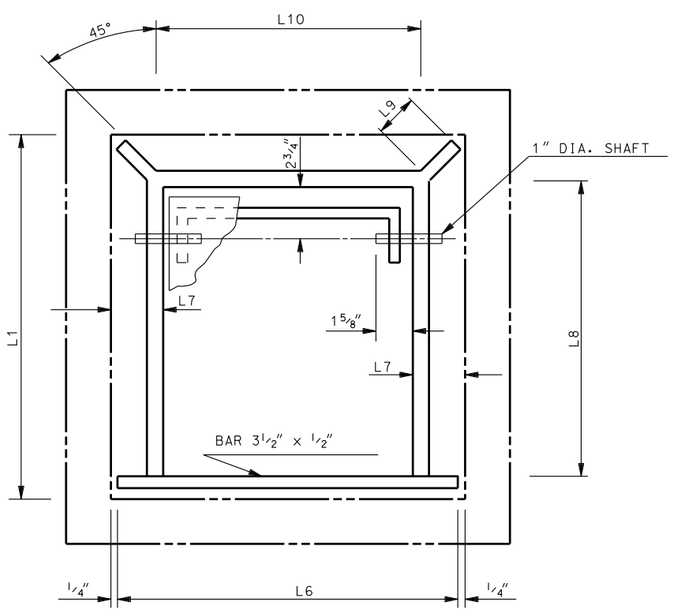

SOLID COVER TYPE "A" DETAILS
SUB-FRAME TYPE II PLAN

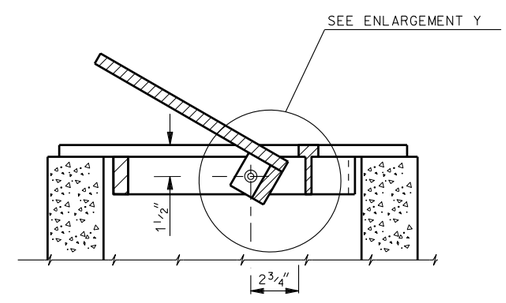

SECTION S-S

USE BAR 3 1/2" x 1/2" DIA. FOR ALL MEMBERS OF SUB-FRAME EXCEPT AS NOTED.

REVISIONS

NO.	DATE	APPR.	REMARKS

UTAH DEPARTMENT OF TRANSPORTATION
STANDARD DRAWINGS FOR ROAD AND BRIDGE CONSTRUCTION
SALT LAKE CITY, UTAH

RECOMMENDED FOR APPROVAL — JAN.01,2008 DATE
CHAIRMAN STANDARDS COMMITTEE APPROVED — JAN.01,2008 DATE
DEPUTY DIRECTOR

STANDARD DIVERSION BOX
HINGED LID
(SOLID COVER PLATE)
TYPE "A" DETAILS
TYPE II PLAN
STANDARD DRAWING TITLE

STD DWG
DB 2F

DGN File:L:\Standard.Drawings\Imperial\2008\Approved\Diversion Boxes (DB)\DB02F.dgn
18-DEC-2007