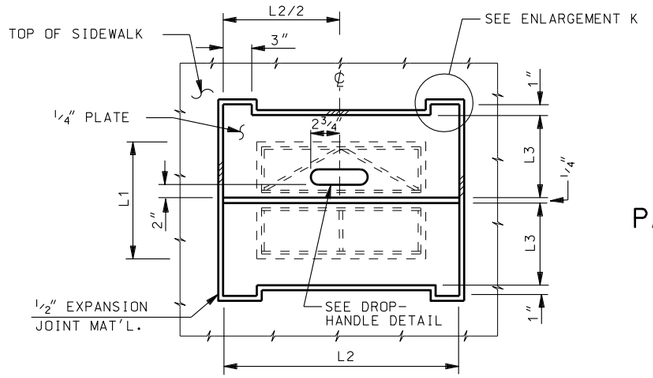

PLAN

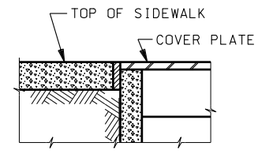

PARTIAL SECTION

PAINT THIS SIGN ON COVER PLATE AFTER FABRICATION WITH LETTERS 2" IN HEIGHT: "RAISE COVER PLATE TO CHANGE GATES"

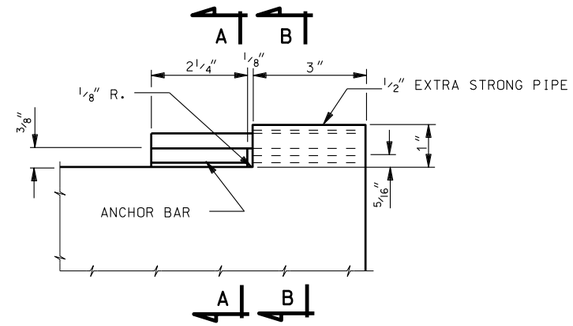

ENLARGEMENT K

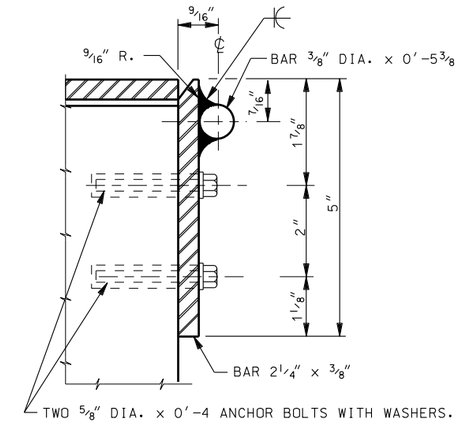

SECTION A-A

SOLID COVER TYPE "C" DETAILS

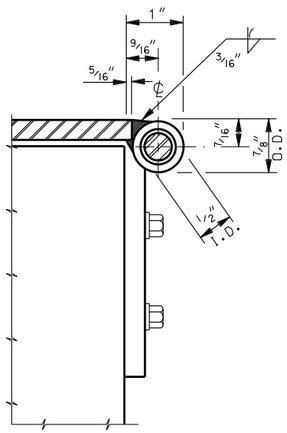

SECTION B-B

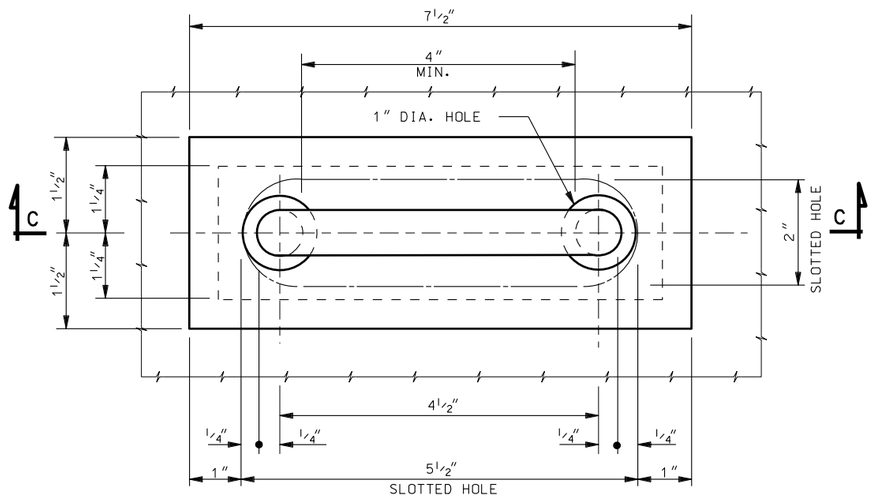

PLAN

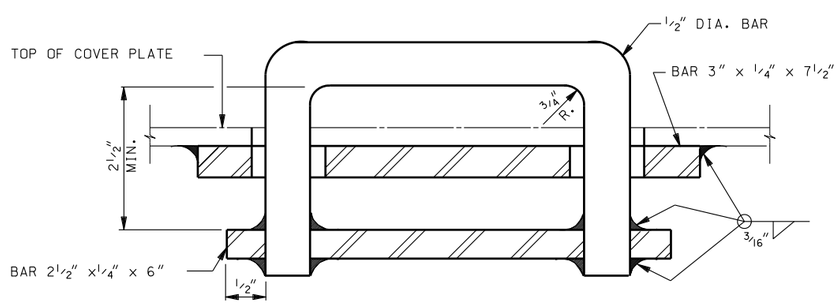

SECTION C-C
DROP HANDLE DETAIL

REQUIRE EITHER ONE DROP-DOWN HANDLE IF LOCATED IN SIDEWALK OR A SLOTTED HAND HOLE 2" x 5 1/2" FOR EACH DIVERSION BOX COVER

SOLID COVER TYPE "C" SUB-FRAME TYPE III DIMENSIONS											
LINE NO.	HAND SLIDE GATE		WALL SIZE	COVER PLATE			SUB-FRAME TYPE III				
	A	B	L1	L2	L3	+	L4	L5	L6	BAR SIZE	
1	12	12	2'-0	3'-0	1'-5 7/8	1/4"	—	—	—	—	
2	18	18	2'-6	3'-6	1'-8 7/8	1/4"	—	—	—	—	
3	24	24	3'-0	4'-0	1'-11 7/8	3/16"	1'-4 3/4	1'-5 3/4	1'-11	3 1/2 x 1/2	
4	36	36	4'-4	5'-4	2'-1 7/8	3/16"	2'-0 3/4	2'-1 3/4	2'-10 1/4	3 1/2 x 1/2	

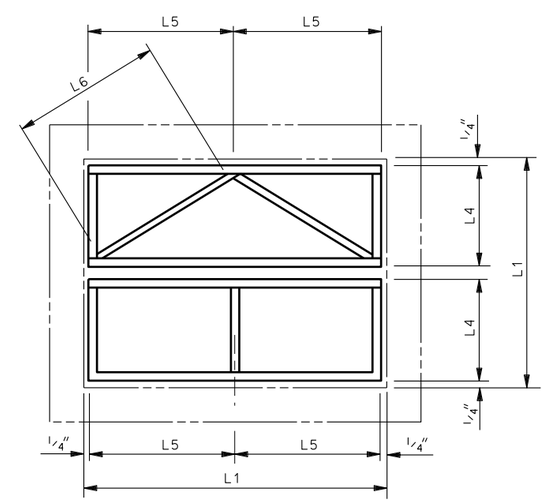

SUB-FRAME TYPE III

NO.	DATE	APPR.	REMARKS

REVISIONS

UTAH DEPARTMENT OF TRANSPORTATION
STANDARD DRAWINGS FOR ROAD AND BRIDGE CONSTRUCTION
SALT LAKE CITY, UTAH

RECOMMENDED FOR APPROVAL — JAN.01.2008 DATE
CHAIRMAN STANDARDS COMMITTEE APPROVED — JAN.01.2008 DATE
DEPUTY DIRECTOR

STANDARD DIVERSION BOX
HINGED LID
SOLID COVER
TYPE "B" AND "C" DETAILS

STANDARD DRAWING TITLE

STD DWG
DB 2H

DGN File:L:\Standard Drawings\Imperial\2008Approved\Diversion Boxes (DB)\DB02H.dgn
18-DEC-2007