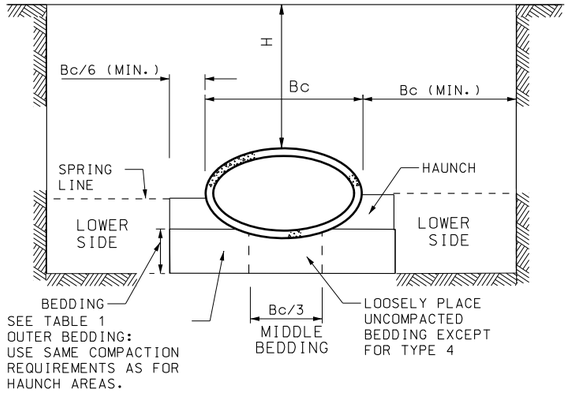

HORIZONTAL ELLIPTICAL PIPE
EMBANKMENT BEDDING
(USE ONLY TYPE 2 & 3 INSTALLATION)

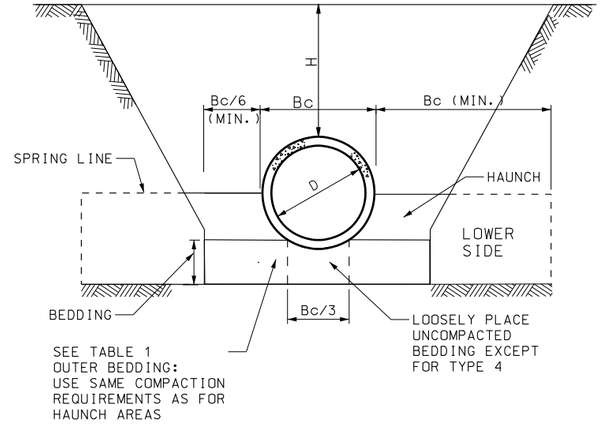

STANDARD TRENCH INSTALLATION
ROUND PIPE

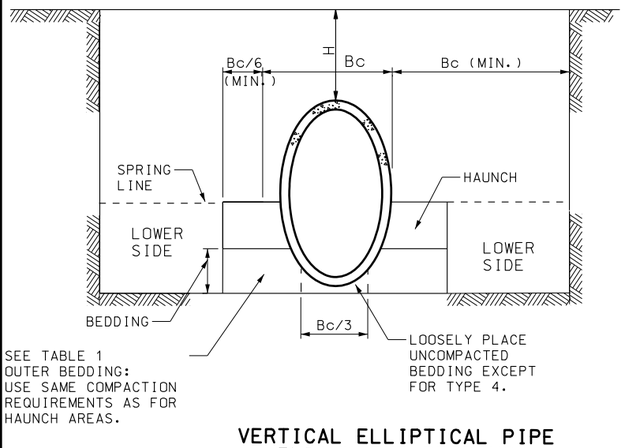

VERTICAL ELLIPTICAL PIPE
EMBANKMENT BEDDING
(USE ONLY TYPE 2 & 3 INSTALLATION)

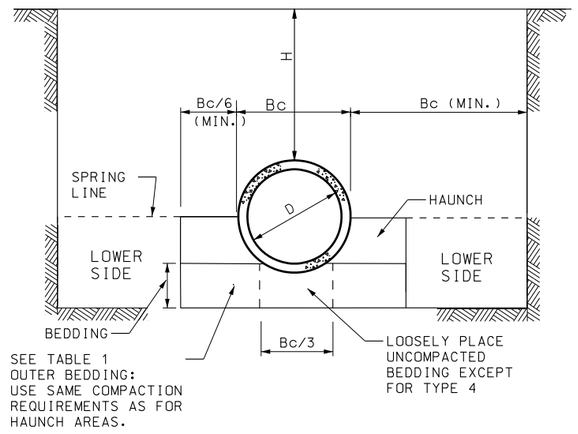

STANDARD EMBANKMENT INSTALLATION
ROUND PIPE

TABLE 1. SOILS AND MINIMUM COMPACTION REQUIREMENTS FOR STANDARD EMBANKMENT AND TRENCH INSTALLATIONS.

INSTALLATION TYPE	BEDDING THICKNESS	HAUNCH & OUTER BEDDING			LOWER SIDE		
		MINIMUM COMPACTION	AASHTO SOIL CLASS	USCS	MINIMUM COMPACTION	AASHTO SOIL CLASS	USCS
TYPE 1	SOIL FOUNDATIONS: Bc/24 IN. MIN., NOT LESS THAN 3 IN. ROCK FOUNDATIONS: Bc/12 IN. MIN., NOT LESS THAN 6 IN.	95%	A1,A3	SW	90% 95% 100%	A1,A3 A2,A4 A5,A6	SW ML CL

NOTES:

1. COMPACT BACKFILL ACCORDING TO TABLE 1. REFER TO AASHTO T 99. REMOVE BOULDERS OR ROCKS WITHIN BEDDING AREAS. PROVIDE SUFFICIENT TRENCH WIDTH TO FIT COMPACTION EQUIPMENT.
2. RECESS THE BEDDING TO RECEIVE CULVERT JOINTS WHERE APPLICABLE.
3. FILL AND COMPACT HAUNCH AREAS UNDER PIPE ACCORDING TO SPECIFICATIONS. REMOVE ANY VOIDS WITHOUT DISTURBING THE PIPE FROM SPECIFIED LINE AND GRADE.
4. SEAL CONNECTIONS TO JUNCTIONS BOXES, MANHOLES, AND INLETS ACCORDING TO MANUFACTURER'S RECOMMENDATIONS.
5. PROTECT PIPES DURING CONSTRUCTION. REPLACE ANY PIPES DAMAGED DURING CONSTRUCTION.
6. DO NOT USE DAMAGED PIPES THAT HAVE CRACKS WIDER THAN 0.01 INCHES.
7. REMOVE AS DIRECTED BY THE ENGINEER UNSTABLE SOILS SUCH AS PEAT, BOG, SILTS, CLAYS, AND UNCEMENTED SANDS WHOSE WATER CONTENT EXCEED THEIR LIQUID LIMITS FROM THE PIPE BEDDING AREA. REPLACE WITH SUITABLE BACKFILL MATERIAL.
8. FOLLOW STANDARD SPECIFICATION SECTION 00820 AND "THE UDOT CONSTRUCTION SAFETY AND HEALTH MANUAL" FOR MINIMUM SAFETY TRENCH REQUIREMENTS.

REINFORCED CIRCULAR PIPE MAX.FILL HEIGHT

PIPE DIA. inch	PIPE CLASSES II ft.	III ft.	IV ft.	V ft.
18	20	27	41	61
21	20	27	41	61
24	20	27	40	61
27	20	27	40	61
30	20	27	40	60
33	19	27	39	60
36	19	26	39	59
42	19	26	39	59
48	19	26	39	59
54	18	25	39	58
60	18	25	38	58
66	18	25	38	57
72	18	24	38	57
78	17	24	37	57
84	17	24	37	56
90	17	24	37	56
96	17	24	36	56
102	17	23	36	55
108	16	23	36	55
114	16	23	35	55
120	16	23	35	54
126	16	23	35	54
132	16	22	35	54
138	15	22	34	53
144	15	22	34	53

ELLIPTICAL PIPE MAX.FILL HEIGHT

PIPE DIA. inch	PIPE CLASSES II ft.	III ft.	IV ft.	V ft.
14x23	20	27	41	61
19x30	20	27	41	61
22x34	20	27	40	61
24x38	20	27	40	61
27x42	20	27	40	60
29x45	19	27	39	60
32x49	19	26	39	59
34x53	19	26	39	59
38x60	19	26	39	59
43x68	18	25	39	58
48x76	18	25	38	58
53x83	18	25	38	57
58x91	18	24	38	57
63x98	17	24	37	57
68x106	17	24	37	56
72x113	17	24	37	56
77x121	17	24	36	56
82x128	17	23	36	55
87x136	16	23	36	55
92x143	16	23	35	55
97x151	16	23	35	54
106x166	16	23	35	54
116x180	16	22	35	54

NON-REINFORCED CIRCULAR PIPE MAX.FILL HEIGHT

PIPE DIA. inch	PIPE CLASSES I ft.	II ft.	III ft.
18	19	27	30
21	18	25	30
24	17	24	29
27	16	23	27
30	15	22	25
33	14	21	23
36	14	19	21

NO.	DATE	APPR.	REMARKS

REVISIONS

UTAH DEPARTMENT OF TRANSPORTATION
STANDARD DRAWINGS FOR ROAD AND BRIDGE CONSTRUCTION
SALT LAKE CITY, UTAH

RECOMMENDED FOR APPROVAL — JAN.01,2008 DATE
CHAIRMAN STANDARDS COMMITTEE
APPROVED — JAN.01,2008 DATE
DEPUTY DIRECTOR

PRECAST CONCRETE PIPE CULVERT INSTALLATION

STANDARD DRAWING TITLE

STD DWG
DG 5C

DGN File:L:\Standard_Drawings\Imperial\2008Approved\Drainage (DG)\DG05C.dgn
18-DEC-2007