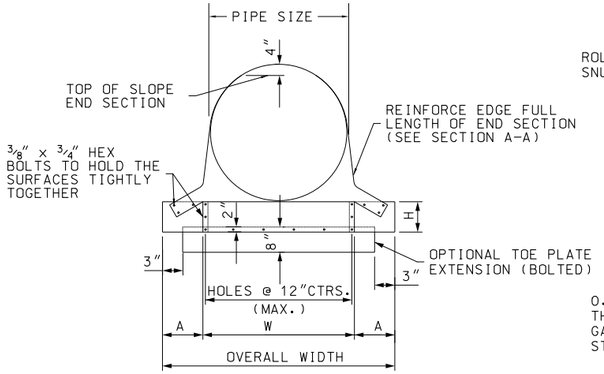

FRONT VIEW

SLOPED END SECTION- TYPE C WITH SAFETY BARS

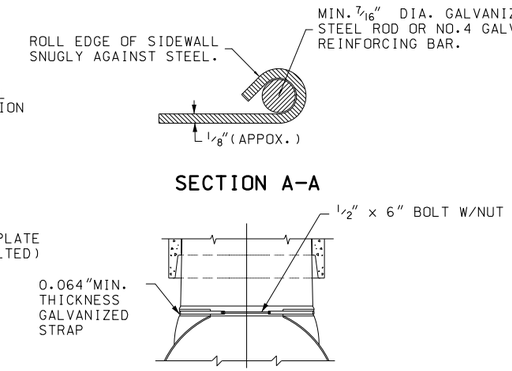

SECTION A-A

TYPE #1 CONNECTOR DETAIL

THROUGH 24" DIA.

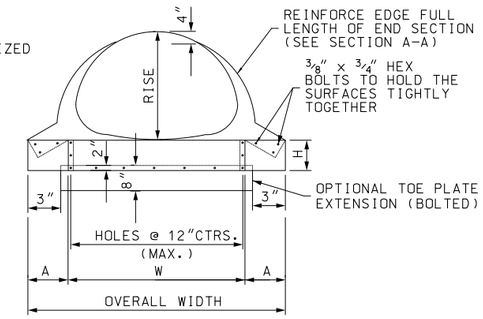

FRONT VIEW

SLOPED END SECTION- TYPE C PIPE ARCH WITH SAFETY BARS

NOTES:

1. SAFETY SLOPE END SECTIONS ARE OPTIONAL FOR USE IN THE AASHTO CLEAR ZONE.
2. STEEL: MEET AASHTO M 218.
3. CONNECTORS: ROUND SIZES THRU 24" ATTACH TO PIPE WITH TYPE #1 STRAPS. ATTACH ALL OTHER SIZES WITH TYPE #2 RODS AND LUGS.
4. TOE PLATE EXTENSIONS: WHEN SPECIFIED IN BID ITEM, USE TOE PLATE EXTENSIONS OF THE SAME GAGE AS END SECTION.
5. SAFETY BARS: USE SCHEDULE 40 ASTM A 500 CLASS B STEEL PIPE FOR SAFETY BARS. GALVANIZE AFTER FABRICATION.
6. PROVIDE SLOTTED HOLES FOR SAFETY BAR ATTACHMENT FOR ALL END SECTIONS.
7. NUMBER OF BARS REQUIRED VARIES DEPENDING ON THE LENGTH OF THE END SECTION. PLACE BAR NO. 1 AT SKIRT END AS SHOWN.
8. BOLTS: USE ONLY STAINLESS STEEL BOLTS AND NUTS.

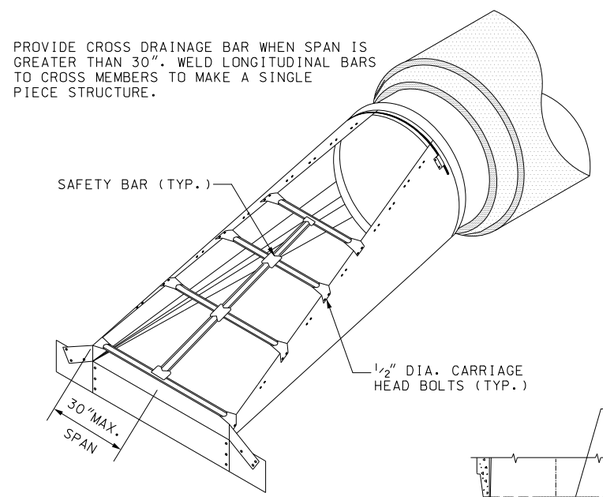

CROSS DRAINAGE STRUCTURE

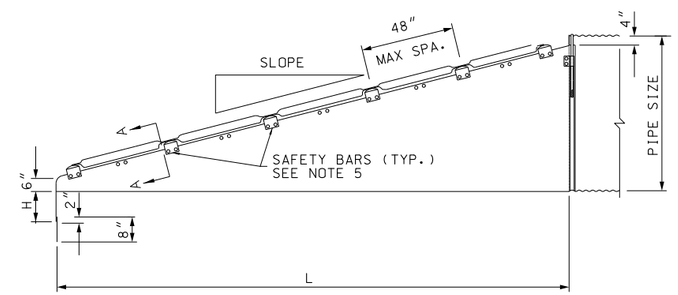

SIDE ELEVATION FOR CROSS DRAINAGE STRUCTURE (TYP.)

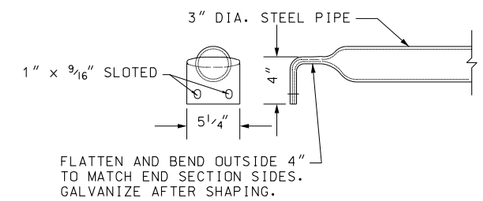

SAFETY BAR DETAIL

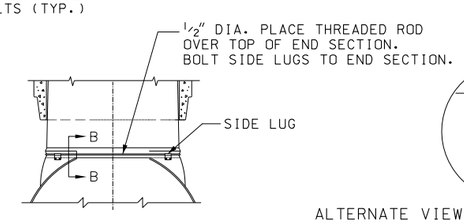

TYPE #2 CONNECTOR DETAILS

FOR 30" AND LARGER

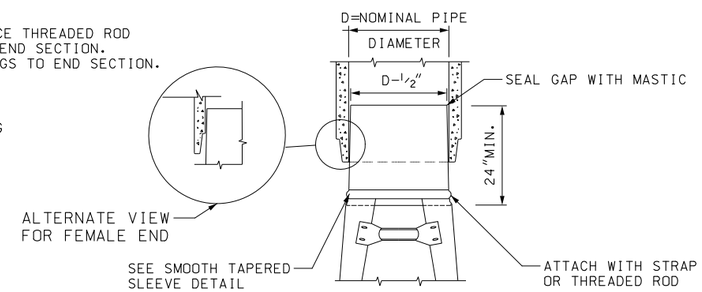

SMOOTH PIPE CONNECTION DETAIL

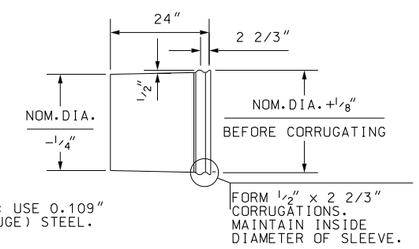

NOTE:
SLEEVE: USE 0.109" (12 GAUGE) STEEL.

SMOOTH TAPERED SLEEVE DETAIL

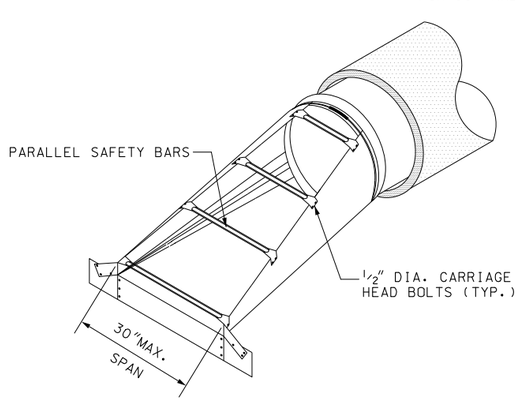

24" DRAINAGE STRUCTURE

METAL END SECTIONS FOR CIRCULAR PIPE										
PIPE DIA. (INCH)	MIN. THICK		DIMENSION (INCHES)				L DIMENSIONS			
	INCH	GAGE	A	H	W	OVERALL WIDTH	SLOPE	LENGTH (INCH)	SLOPE	LENGTH (INCH)
18	.064	16	8	6	24	40	4:1	32	6:1	48
21	.064	16	8	6	27	43	4:1	44	6:1	66
24	.064	16	8	6	30	46	4:1	56	6:1	84
30	.109	12	12	9	36	60	4:1	80	6:1	120
36	.109	12	12	9	42	66	4:1	104	6:1	156
42	.109	12	16	12	48	80	4:1	128	6:1	192
48	.109	12	16	12	54	86	4:1	152	6:1	228
54	.109	12	16	12	60	92	4:1	176	6:1	264
60	.109	12	16	12	66	98	4:1	200	6:1	300

METAL END SECTIONS FOR ARCHED PIPE												
EQUV DIA. (INCH)	(INCHES)		MIN. THICK		DIMENSION (INCHES)				L DIMENSIONS			
	SPAN	RISE	INCH	GAGE	A	H	W	OVERALL WIDTH	SLOPE	LENGTH (INCH)	SLOPE	LENGTH (INCH)
18	21	15	.064	16	8	6	27	43	4:1	20	6:1	30
21	24	18	.064	16	8	6	30	46	4:1	32	6:1	48
24	28	20	.064	16	8	6	34	50	4:1	40	6:1	60
30	35	24	.079	14	12	9	41	65	4:1	56	6:1	84
36	42	29	.109	12	12	9	48	72	4:1	76	6:1	114
42	49	33	.109	12	16	12	55	87	4:1	92	6:1	138
48	57	38	.109	12	16	12	63	95	4:1	112	6:1	158
54	64	43	.109	12	16	12	70	102	4:1	132	6:1	198
60	71	47	.109	12	16	12	77	109	4:1	148	6:1	222
72	83	57	.109	12	16	12	89	121	4:1	188	6:1	282

REVISIONS

NO.	DATE	APPR.	REMARKS

UTAH DEPARTMENT OF TRANSPORTATION
STANDARD DRAWINGS FOR ROAD AND BRIDGE CONSTRUCTION
SALT LAKE CITY, UTAH

RECOMMENDED FOR APPROVAL — JAN.01,2008 DATE
CHAIRMAN STANDARDS COMMITTEE
APPROVED — JAN.01,2008 DATE
DEPUTY DIRECTOR

SAFETY SLOPE END SECTION FOR CIRCULAR AND ARCHED PIPES

STANDARD DRAWING TITLE

STD DWG
DG 6

DGN File:L:\Standard Drawings\Imperial\2008Approved\Drainage (DG)\DG06.dgn
18-DEC-2007