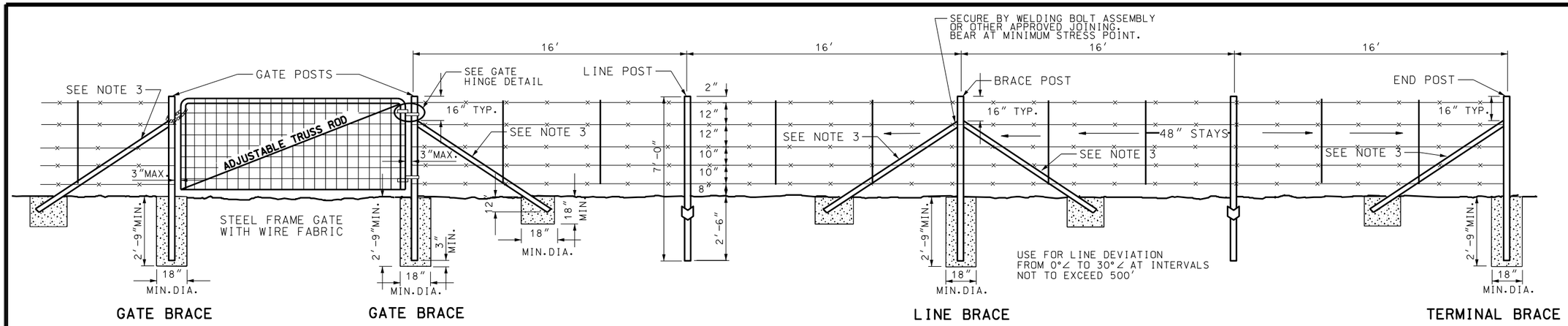

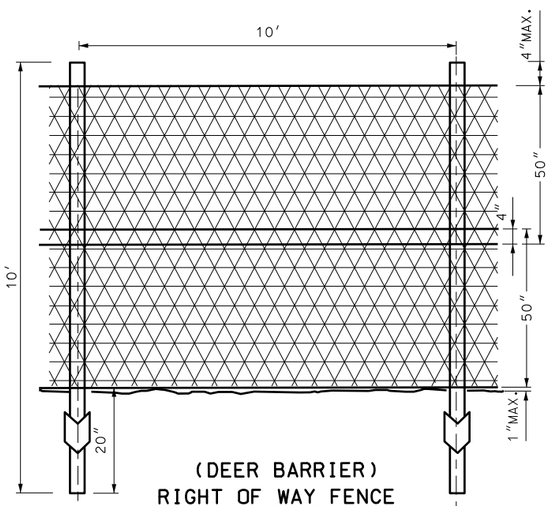

(DEER BARRIER)
RIGHT OF WAY FENCE
TYPE G

TYPE G NOTES.

1. TIE OR CLAMP THE 50 inches TOGETHER EVERY 12 inches USING HOG RINGS OR OTHER TYPES OF TIES OR CLAMPS
2. PLACE BOTTOM WIRE NO MORE THEN 1 inch ABOVE THE GROUND, OR BURY IT AS NEEDED.

INSTALLATION WITH METAL POSTS
(TYPICAL)

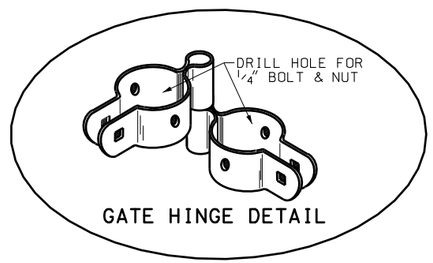

GATE HINGE DETAIL

NOTES:

1. SET METAL POSTS IN CLASS "B" CONCRETE.
2. LINE POSTS FOR TYPE A,B,D,E,F & G FENCE
   A-TEE CHANNELS OR "Y" OR "U" SECTIONS, MINIMUM WEIGHT 1.33 lb/ft. ON LENGTH.
   B-STEEL PIPES,1.900″ OUTSIDE DIAMETER SCHEDULE 40 PIPE, WEIGHT 2.72 lb/ft OF LENGTH OR HIGH TENSILE TRIPLE COATED STEEL PIPE, WEIGHT 2.23 lb/ft OF LENGTH.
   C-ALTERNATE LINE POSTS APPROVED BY THE ENGINEER TO HAVE A MINIMUM RESISTING SECTION MODULUS OF 0.32 cubic inches PERPENDICULAR AND 0.12 cubic inches PARALLEL TO THE FENCE LINE. ANCHOR PLATES TO POSTS, MINIMUM SURFACE AREA OF 20 square inches, MINIMUM 18 GAUGE THICKNESS AND MINIMUM WEIGHT 0.67 lb/EACH
3. BRACE AND CORNER POSTS (ASTM A 36)
   A-BRACE AND CORNER POSTS FOR TYPE A,B,D,E & F FENCES USE 2½″x 2½″x ¼″ ANGLES, MINIMUM WEIGHT 4.10 lb/ft.
   B-BRACES FOR TYPE A,B,D,E& F FENCES, USE 2″x 2″ x ¼″ ANGLES, MINIMUM WEIGHT 3.19 lb/ft.
   C-TYPE G: PIPE FOR CORNER AND BRACE POSTS, USE 2.375″ OUTSIDE DIAMETER, WEIGHT 3.65 lb/ft. OR HIGH TENSILE TRIPLE COATED STEEL, 2.375″ OUTSIDE DIAMETER WEIGHT 3.11 lb/ft.
4. LINE POSTS FOR TYPE A,B,D,E & F FENCE: 7′-0″ LENGTH
   LINE POSTS FOR TYPE G FENCE: 12′-0″
5. TERMINATE MESH AND BARBED WIRE AT EACH CORNER POST.
6. USE CORNER POST BRACES ON ALL FENCE LINE DEVIATIONS GREATER THAN 5.8 feet IN 10 feet. USE CORNER POST BRACES ON TYPE G FENCE WITH DEVIATIONS GREATER THAN 3 feet IN 10 feet.
7. GALVANIZE METAL PER (ASTM A 702) OR PAINTED (ASTM A 123)

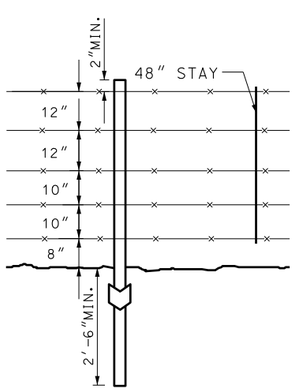

TYPE A

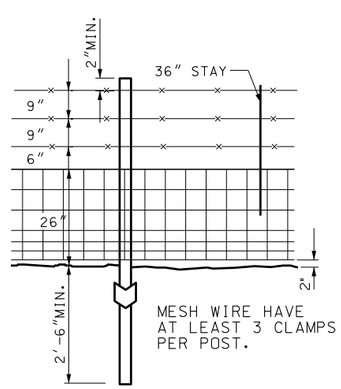

MESH WIRE HAVE AT LEAST 3 CLAMPS PER POST.

TYPE B

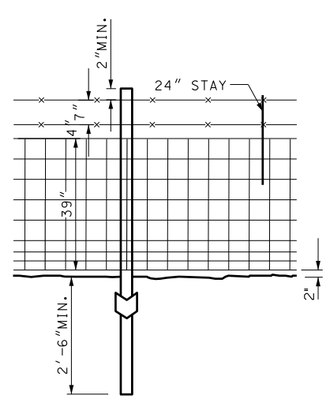

TYPE D

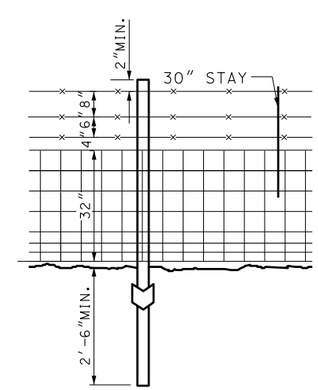

TYPE E

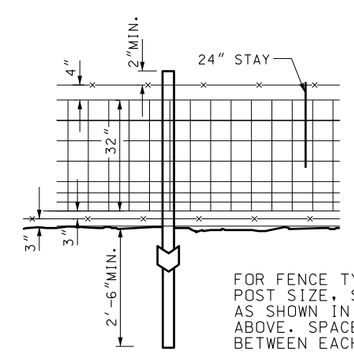

FOR FENCE TYPES A, B, D, E AND F POST SIZE, SPACING AND BRACING ARE AS SHOWN IN TYPICAL INSTALLATION ABOVE. SPACE 2 STAYS EVENLY BETWEEN EACH SET OF POSTS.

TYPE F

TO BE INSTALLED IN DEER COUNTRY

NO.	DATE	APPR.	REMARKS

REVISIONS

UTAH DEPARTMENT OF TRANSPORTATION
STANDARD DRAWINGS FOR ROAD AND BRIDGE CONSTRUCTION
SALT LAKE CITY, UTAH

RECOMMENDED FOR APPROVAL — JAN.01,2008 DATE
CHAIRMAN STANDARDS COMMITTEE APPROVED — JAN.01,2008 DATE
DEPUTY DIRECTOR

RIGHT OF WAY FENCE AND GATES (METAL POST)
STANDARD DRAWING TITLE

STD DWG
FG 2A

DGN File:L:\Standard_Drawings\Imperial\2008Approved\Fence and Gates (FG)\FG02A.dgn
18-DEC-2007