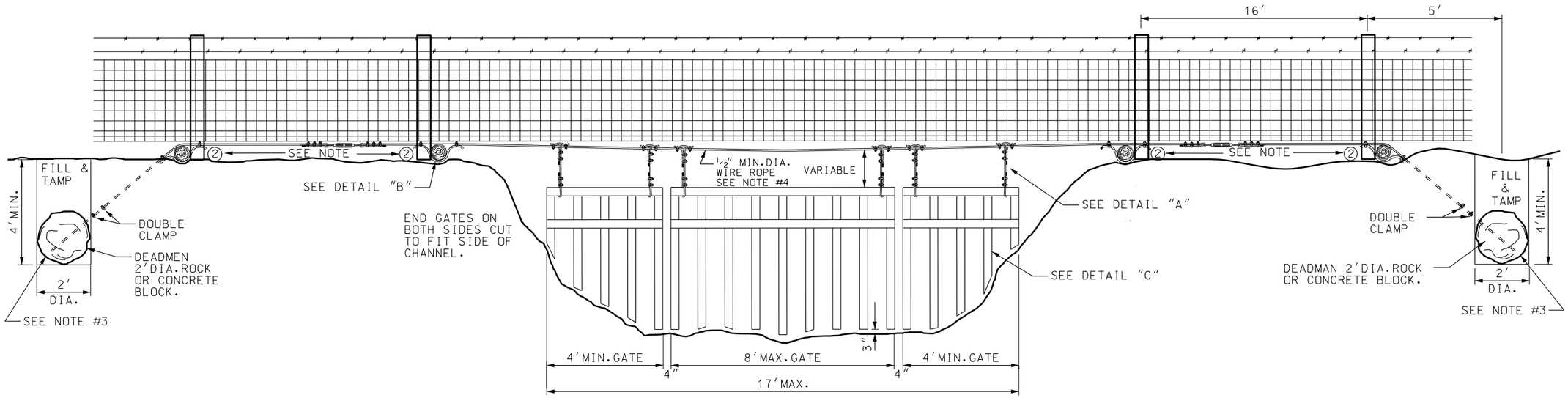

INSTALLATION DETAIL

DETAIL "B"

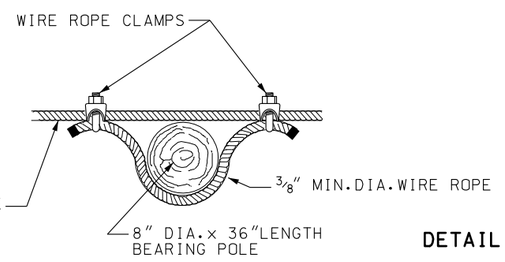

DETAIL "A"

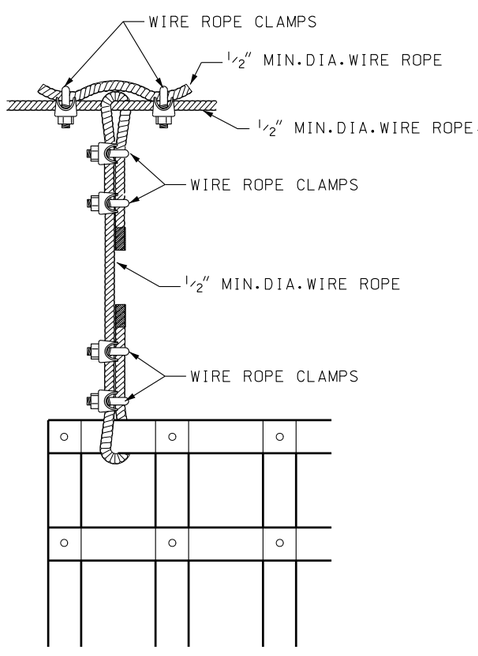

DETAIL "C"

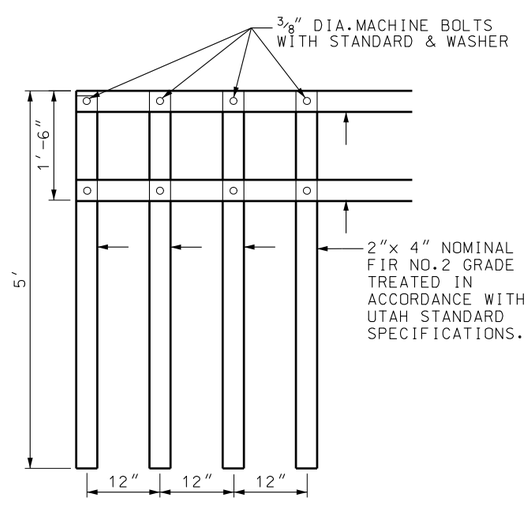

DETAIL "D"

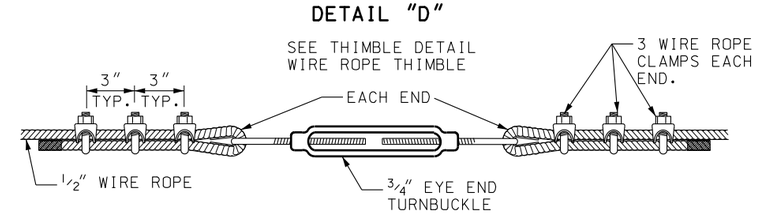

THIMBLE DETAIL

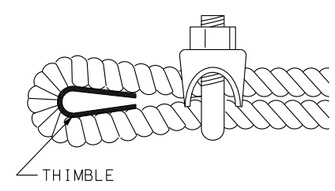

NOTES:

1. INSTALL BEARING POLES,DEADMAN AND TURN BUCKLE THE SAME ON BOTH SIDES ON THE CHANNEL.
2. INSTALL WIRE ROPE ON THE UPSTREAM SIDE OF THE FENCE POSTS.
3. WRAP WIRE ROPE AROUND ROCK AND CLAMP WITH A DOUBLE CLAMP.
4. USE ½″ DIA. WIRE 6″× 12″ WITH A BREAKING STRENGTH OF 10,000 lbs.

REVISIONS

NO.	DATE	APPR.	REMARKS

UTAH DEPARTMENT OF TRANSPORTATION
STANDARD DRAWINGS FOR ROAD AND BRIDGE CONSTRUCTION
SALT LAKE CITY, UTAH

RECOMMENDED FOR APPROVAL — JAN.01.2008 DATE
CHAIRMAN STANDARDS COMMITTEE APPROVED — JAN.01.2008 DATE
DEPUTY DIRECTOR

SWING GATE TYPE I
FOR GATES
LESS THAN 17′

STANDARD DRAWING TITLE

STD DWG
FG 3

DGN File:L:\Standard.Drawings\Imperial\2008Approved\Fence and Gates (FG)\FG03.dgn
18-DEC-2007