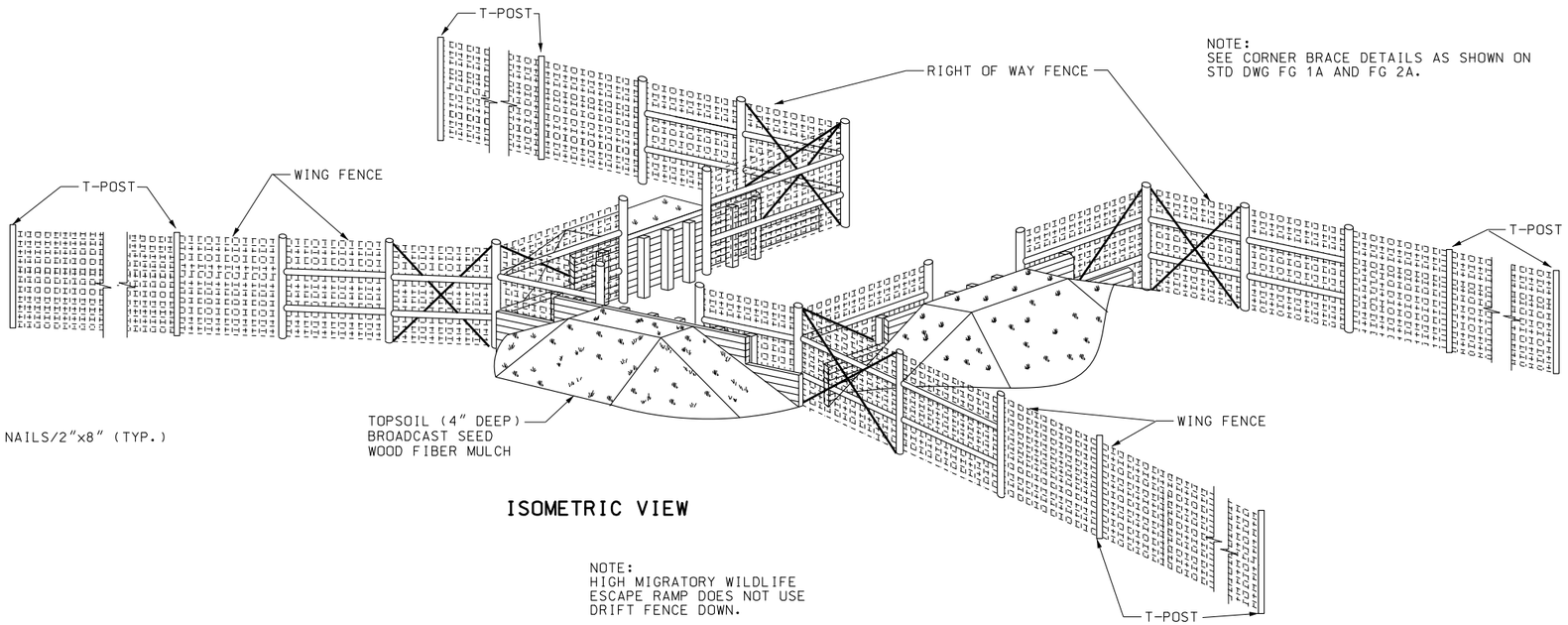

ISOMETRIC VIEW

NOTE:
HIGH MIGRATORY WILDLIFE
ESCAPE RAMP DOES NOT USE
DRIFT FENCE DOWN.

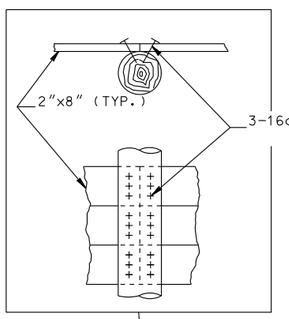

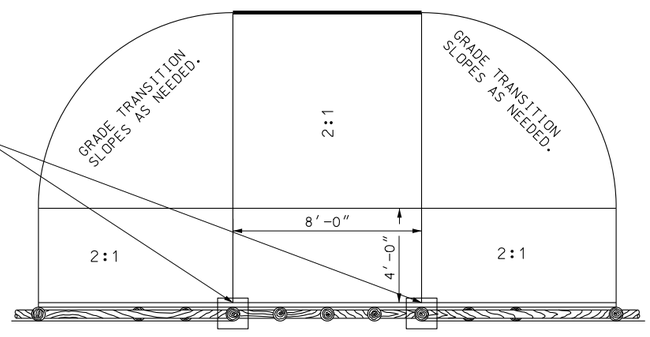

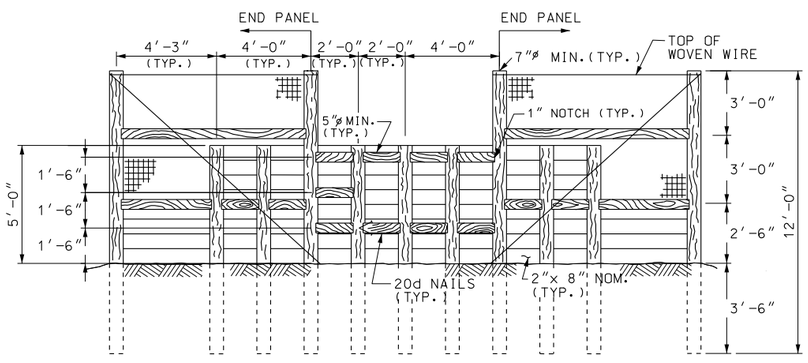

HIGH MIGRATORY WILDLIFE
ESCAPE RAMP DETAIL

NOTE: USE 2" x 8" TIMBER PLANKS FOR ALL HORIZONTAL
AND LONGITUDINAL BACKING.

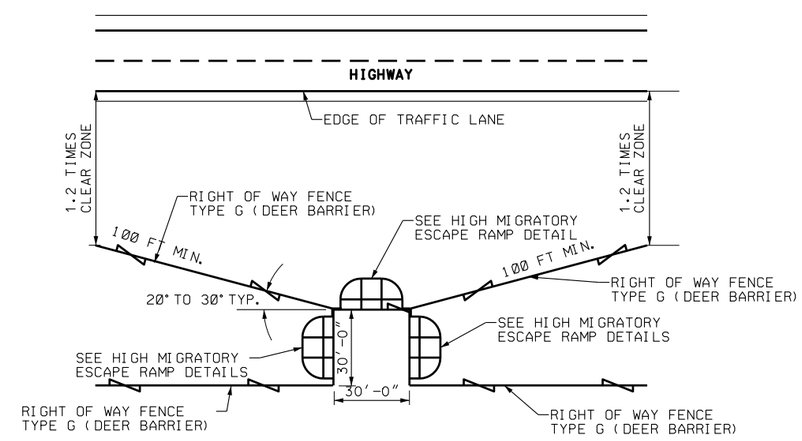

HIGH MIGRATORY WILDLIFE
ESCAPE RAMP PLAN VIEW

NOTE: DESIGN MAY BE MODIFIED AS
GROUND CONDITIONS DICTATE.

REVISIONS

NO.	DATE	APPR.	REMARKS

UTAH DEPARTMENT OF TRANSPORTATION
STANDARD DRAWINGS FOR ROAD AND BRIDGE CONSTRUCTION
SALT LAKE CITY, UTAH

RECOMMENDED FOR APPROVAL — JAN.01.2008 DATE
CHAIRMAN STANDARDS COMMITTEE
APPROVED — JAN.01.2008 DATE
DEPUTY DIRECTOR

HIGH MIGRATORY
WILDLIFE ESCAPE
RAMP DETAILS

STANDARD DRAWING TITLE

STD DWG
FG 4B

DGN File:L:\Standard Drawings\Imperial\2008Approved\Fence and Gates (FG)\FG04B.dgn
18-DEC-2007