| TO BE USED FOR (NOM. SIZE) | | | | | | | | TRANSVERSE BARS | | | | | | | | | MAIN BARS | | | | | | | | | | | | | | | | |
|---|---|---|---|---|---|---|---|---|---|---|---|---|---|---|---|---|---|---|---|---|---|---|---|---|---|---|---|---|---|---|---|---|---|
| | | | | | | | | 1- EACH REQUIRED | | | | | | | | | 2- EACH | | | 2-EACH REQUIRED | | | | | | | | | W1 TO W11 | | NO. OF HANGER AND HANGER RODS (SPACED EQUALLY) | WEIGHT OF STRUCT. STEEL |
| LINE | BOX CULVERTS | CORRUGATED METAL PIPES | CORRUGATED PIPE ARCHES | CONCRETE PIPE | MULTI-PLATE ELLIPSES | MULTI-PLATE PIPE ARCHES | A | L1 | | | L2 | | | L3 | L4 | W1 | W2 | | W3 | W4 | W5 | W6 | W7 | W8 | W9 | W10 | W11 | | | | |
| | | | | | | | | LENGTH | THICKNESS | WIDTH | LENGTH | THICKNESS | WIDTH | LENGTH | LENGTH | LENGTH | LENGTH | NO. | LENGTH | LENGTH | LENGTH | LENGTH | LENGTH | LENGTH | LENGTH | LENGTH | LENGTH | THICKNESS | WIDTH | | LBS. |
| 1 | | 18″ | 29″ X 18″ | 18″ | | | 1′-5 | 1′-5 | 1/4″ | 1 1/4″ | 3′-11 3/4″ | 1/2″ | 1 5/8″ | 2′-8 | 0 | 3′-2 3/4″ | 2′-11 5/8″ | 2 | 2′-10 1/8″ | 1′-8 1/8″ | 0′-6 1/8″ | | | | | | | 1/4″ | 1 1/4″ | 2 | 55.8 |
| 2 | | | | | | | 1′-5 | 2′-4 | | | 4′-10 5/8″ | | | 3′-7 | | 3′-2 3/4″ | 2′-11 5/8″ | 4 | 2′-9″ | 1′-7″ | 0′-5″ | | | | | | | | | | 67.5 |
| 3 | | 21″ | | 21″ | | | 1′-7 | 1′-8 | | | 4′-6 1/2″ | | | 3′-1 | | 3′-7 1/8″ | 3′-4 1/8″ | 4 | 2′-4 1/4″ | 1′-2 1/4″ | | | | | | | | | | | 64.5 |
| 4 | | 24″ | | 24″ | | | 1′-10 | 1′11 | | | 5′-1 1/4″ | | | 3′-6 | | 4′-0 1/8″ | 3′-8 5/8″ | 4 | 3′-0 1/4″ | 1′-10 1/4″ | 0′- 8 1/4″ | | | | | | | | | | 74.5 |
| 5 | | | 36″ x 22″ | | | | 1′-10 | 2′-11 | | | 5′-10 3/4″ | | | 4′-6 | | 3′-9 1/4″ | 3′-5 3/8″ | 6 | 2′-9 1/4″ | 1′-7 1/4″ | 0′-5 1/4″ | | | | | | | | | | 84.4 |
| 6 | | | | 27″ | | | 2′-0 | 2′-2 | | | 5′-8 1/8″ | | | 3′-11 | | 4′-5 1/2″ | 4′-1 1/8″ | 4 | 3′-8 1/4″ | 2′-6 1/4″ | 1′-4 1/4″ | | | | | | | | | | 84.4 |
| 7 | | | 43″ x 27″ | | | | 2′-0 | 3′-6 | | | 7′-0 1/8″ | | | 5′-3 | | 4′-5 1/2″ | 4′-1 1/8″ | 6 | 4′-0 1/8″ | 2′-10 7/8″ | 1′-8 1/8″ | 0′-6 1/8″ | | | | | | | | | 105.7 |
| 8 | | | 50″ x 31″ | | | | 2′-3 | 4′-1 | | | 8′-0 3/8″ | | | 6′-0 | | 5′-0″ | 4′-7 1/4″ | 8 | 4′-1″ | 2′-11″ | 1′-9″ | 0′-7″ | | | | | | | | | 125.9 |
| 9 | 24″ X 24″ | | | | | | 1′-10 | 1′-11 | | | 5′-1 3/8″ | | | 3′-6 | | 4′-0 1/8″ | 3′-8 3/8″ | 4 | 3′-0 1/4″ | 1′-10 1/4″ | 0′-8 1/4″ | | | | | | | | | | 74.5 |
| 10 | | 30″ | | 30″ | | | 2′-2 | 2′-5 | | | 6′-3″ | | | 4′-4 | | 4′-10 3/8″ | 4′-5 3/8″ | 4 | 4′-4 1/4″ | 3′-2 1/4″ | 2′-0 1/4″ | 0′-10 1/4″ | | | | | | | | | 96.2 |
| 11 | 36″ X 24″ | | | | | | 1′-10 | 2′-11 | | | 6′-1 3/8″ | | | 4′-6 | | 4′-0 1/2″ | 3′-8 3/8″ | 6 | 3′-0 1/4″ | 1′-10 1/4″ | 0′-8 1/4″ | | | | | | | | | | 89.0 |
| 12 | 48″ X 24″ | | | | | | 1′-10 | 3′-11 | | | 7′-1 3/8″ | | | 5′-6 | | 4′-0 1/2″ | 3′-8 3/8″ | 8 | 3′-0 1/4″ | 1′-10 1/4″ | 0′-8 1/4″ | | | | | | | | | | 103.6 |
| 13 | 60″ X 24″ | | | | | | 1′-10 | 4′-11 | | | 8′-1 3/8″ | | | 6′-6 | | 4′-0 1/2″ | 3′-8 3/8″ | 10 | 3′-0 1/4″ | 1′-10 1/4″ | 0′-8 1/4″ | | | | | | | | | | 118.1 |
| 14 | 72″ X 24″ | | | | | | 1′-10 | 5′-11 | | | 9′-1 3/8″ | | | 7′-6 | | 4′-0 1/2″ | 3′-8 3/8″ | 12 | 3′-0 1/4″ | 1′-10 1/4″ | 0′-8 1/4″ | | | | | | | | | 2 | 132.7 |
| 15 | 84″ X 24″ | | | | | | 1′-10 | 6′-11 | | | 10′-1 3/8″ | | | 8′-6 | | 4′-0 1/2″ | 3′-8 3/8″ | 14 | 3′-0 1/4″ | 1′-10 1/4″ | 0′-8 1/4″ | | | | | | | | | 3 | 153.1 |
| 16 | 96″ X 24″ | | | | | | 1′-10 | 7′-11 | | | 11′-1 3/4″ | | | 9′-6 | | 4′-0 1/2″ | 3′-8 3/8″ | 16 | 3′-0 1/4″ | 1′-10 1/4″ | 0′-8 1/4″ | | | | | | | | | 3 | 167.6 |
| 17 | | | | 33″ | | | 2′-5 | 2′-8 | 1/4″ | | 6′-9 1/8″ | | | 4′-9 | | 5′-3 1/4″ | 4′-10 1/8″ | 6 | 3′-10 1/4″ | 2′-8 1/4″ | 1′-6 1/4″ | | | | | | | | | 3 | 113.0 |
| 18 | | 36″ | | 36″ | | | 2′-7 | 2′-11 | 3/8″ | | 7′-4 1/2″ | | | 5′-2 | | 5′-7 7/8″ | 5′-2 3/8″ | 6 | 4′-5 7/8″ | 3′-3 1/8″ | 2′-1 7/8″ | 0′-11 1/8″ | | | | | | | | 2 | 121.4 |
| 19 | | | 58″ x 36″ | | | | 2′-7 | 4′-9 | | | 9′-2 1/2″ | | | 7′-0 | | 5′-7 7/8″ | 5′-2 3/8″ | 10 | 4′-3 5/8″ | 3′-1 3/8″ | 1′11 5/8″ | 0′-9 1/8″ | | | | | | | | | 155.4 |
| 20 | 36″ X 36″ | | | | | | 2′-7 | 2′-11 | | | 7′-4 1/2″ | | | 5′-2 | | 5′-7 7/8″ | 5′-6 1/2″ | 6 | 4′-5 7/8″ | 3′-3 1/2″ | 2′-1 7/8″ | 0′-11 1/8″ | | | | | | | | | 121.4 |
| 21 | | | | 39″ | | | 2′-9 | 3′-2 | | | 7′-11 3/8″ | | | 5′-7 | | 6′-0 3/4″ | 5′-11 3/8″ | 6 | 5′-2″ | 4′-0″ | 2′-10″ | 1′-8″ | 0′-6″ | | | | | | | | 135.0 |
| 22 | | 42″ | | 42″ | | | 2′-11 | 3′-5 | | | 8′-6 1/4″ | | | 5′-11 | | 6′-5 1/2″ | 5′-2 3/8″ | 6 | 5′-9 7/8″ | 4′-7 1/2″ | 3′-5 5/8″ | 2′-3 1/2″ | 1′-1 1/8″ | | | | | | | | 148.5 |
| 23 | 48″ x 36″ | | | | | | 2′-7 | 3′-11 | | | 8′-4 1/2″ | | | 6′-2 | | 5′-7 7/8″ | 5′-2 3/8″ | 8 | 4′-5 7/8″ | 3′-3 7/8″ | 2′-1 7/8″ | 0′-11 1/8″ | | | | | | | | | 139.8 |
| 24 | 60″ x 36″ | | | | | | 2′-7 | 4′-11 | | | 9′-4 1/2″ | | | 7′-2 | | 5′-7 7/8″ | 5′-8 3/8″ | 10 | 4′-5 7/8″ | 3′-3 7/8″ | 2′-1 7/8″ | 0′-11 1/8″ | | | | | | | | | 158.2 |
| 25 | | | 65″ x 40″ | | | | 2′-10 | 5′-4 | | | 10′-2 3/4″ | | | 7′-9 | | 6′-2 3/8″ | 5′-2 3/8″ | 10 | 5′-5 3/4″ | 4′-3 1/4″ | 3′-1 3/4″ | 1′-11 3/4″ | 0′-9 3/4″ | | | | | | | | 2 | 180.1 |
| 26 | 72″ x 36″ | | | | | | 2′-7 | 5′-11 | | | 10′-4 1/2″ | | | 8′-2 | | 5′-7 7/8″ | 5′-2 3/8″ | 12 | 4′-6″ | 3′-4″ | 2′-2″ | 1′-0″ | | | | | | | | 3 | 182.5 |
| 27 | | | 72″ x 44″ | | | | 3′-1 | 5′-11 | | | 11′-2 7/8″ | | | 8′-7 | | 6′-8 3/8″ | 5′-2 3/8″ | 12 | 5′5 7/8″ | 4′-3 7/8″ | 2′-1 7/8″ | 0′-11 7/8″ | 0′-9 7/8″ | | | | | | | | 212.4 |
| 28 | 84″ x 36″ | | | | | | 2′-7 | 6′-11 | | | 11′-4 1/2″ | | | 9′-2 | | 5′-7 7/8″ | 5′-2 3/8″ | 14 | 4′-5 7/8″ | 3′-3 7/8″ | 2′-1 7/8″ | 0′-11 7/8″ | | | | | | | | | 200.8 |
| 29 | 96″ x 36″ | | | | | | 2′-7 | 6′-11 | | | 12′-4 1/2″ | | | 10′-2 | | 5′-7 7/8″ | 5′-2 3/8″ | 16 | 4′-5 7/8″ | 3′-3 7/8″ | 2′-1 7/8″ | 0′-11 7/8″ | | | | | | | | | 219.3 |
| 30 | 108″ x 36″ | | | | | | 2′-7 | 8′-11 | | | 13′-4 1/2″ | | | 11′-2 | | 5′-7 3/8″ | 5′-2 3/8″ | 18 | 4′-5 7/8″ | 3′-3 7/8″ | 2′-1 7/8″ | 0′-11 7/8″ | | | | | | | | | 237.7 |
| 31 | 120″ x 36″ | | | | | | 2′-7 | 9′-11 | | | 14′-4 1/2″ | | | 12′-2 | | 5′-7 3/8″ | 5′-2 3/8″ | 20 | 4′-5 7/8″ | 3′-3 7/8″ | 2′-1 7/8″ | 0′-11 7/8″ | | | | | | | | | 258.4 |
| 32 | 132″ x 36″ | | | | | | 2′-7 | 10′-11 | | | 15′-4 1/2″ | | | 13′-2 | | 5′-7 3/8″ | 5′-2 3/8″ | 22 | 4′-5 7/8″ | 3′-3 7/8″ | 2′-1 7/8″ | 0′-11 7/8″ | | | | | | | | | 280.3 |
| 33 | 144″ x 36″ | | | | | | 2′-7 | 11′-11 | 3/8″ | 1 1/4″ | 16′-4 1/2″ | | 1 5/8″ | 14′-2 | | 5′-7 3/8″ | 5′-2 3/8″ | 24 | 4′-5 7/8″ | 3′-3 7/8″ | 2′-1 7/8″ | 0′-11 7/8″ | | | | | | | | | 298.7 |
| 34 | | 48″ | | 48″ | | | 3′-4 | 3′-11 | 1/4″ | 1 1/2″ | 9′-8 1/8″ | | 2″ | 6′-10 | | 7′-3 3/8″ | 6′-8 3/4″ | 8 | 6′-0 3/8″ | 4′-10 3/8″ | 3′-8 1/2″ | 2′-6 3/8″ | 1′-4 3/8″ | | | | | | | 4 | 196.0 |
| 35 | 48″ x 48″ | | | | | | 3′-4 | 3′-11 | | | 9′-8 1/2″ | | | 6′-10 | | 7′-3 3/8″ | 6′-8 3/4″ | 8 | 6′-0 3/8″ | 4′-10 3/8″ | 3′-8 1/2″ | 2′-6 3/8″ | 1′-4 3/8″ | | | | | | 1 1/4″ | 5 | 201.8 |
| 36 | | 54″ | | 54″ | | | 3′-8 | 4′-5 | | | 10′-9 7/8″ | | | 7′-7 | | 8′-1 3/8″ | 7′-5 3/4″ | 8 | 7′-4 1/4″ | 6′-2 1/4″ | 3′-0 1/4″ | 3′-10 1/4″ | 2′-8 1/4″ | 1′-6 1/4″ | | | | | 1 1/2″ | 2 | 246.3 |
| 37 | 60″ x 48″ | | | | | | 3′-4 | 4′-11 | | | 10′-8 1/8″ | | | 7′-10 | | 7′-3 3/8″ | 6′-8 3/4″ | 10 | 6′-0 3/8″ | 4′-10 3/8″ | 3′-8 1/2″ | 2′-6 3/8″ | 1′-4 3/8″ | | | | | | 1 1/4″ | 2 | 206.6 |
| 38 | 72″ x 48″ | | | | | | | 5′-11 | | | 11′-8 1/2″ | | | 8′-10 | | | | 12 | | | | | | | | | | | | | 2 | 228.7 |
| 39 | 84″ x 48″ | | | | | | | 6′-11 | | | 12′-8 1/2″ | | | 9′-10 | | | | 14 | | | | | | | | | | | | | 2 | 250.9 |
| 40 | 96″ x 48″ | | | | | | | 7′-11 | | | 13′-8 1/2″ | | | 10′-10 | | | | 16 | | | | | | | | | | | | | 3 | 278.9 |
| 41 | 108″ x 48″ | | | | | | | 8′-11 | | | 14′-8 1/2″ | | | 11′-10 | | | | 18 | | | | | | | | | | | | | 3 | 301.1 |
| 42 | 120″ x 48″ | | | | | | | 9′-11 | | | 15′-8 1/2″ | | | 12′-10 | | | | 20 | | | | | | | | | | | | | 3 | 323.2 |
| 43 | 132″ x 48″ | | | | | | | 10′-11 | | | 16′-8 1/2″ | | | 13′-10 | | | | 22 | | | | | | | | | | | | | 4 | 351.2 |
| 44 | 144″ x 48″ | | | | | | 3′-4 | 11′-11 | 1/4″ | 1 1/2″ | 17′-8 1/2″ | 1/2″ | 2″ | 14′-10 | 0 | 7′-3 3/8″ | 6′-8 3/4″ | 24 | 6′-0 3/8″ | 4′-10 3/8″ | 3′-8 1/2″ | 2′-6 3/8″ | 1′-4 3/8″ | | | | | | 1/4″ | 1 1/4″ | 4 | 373.4 |

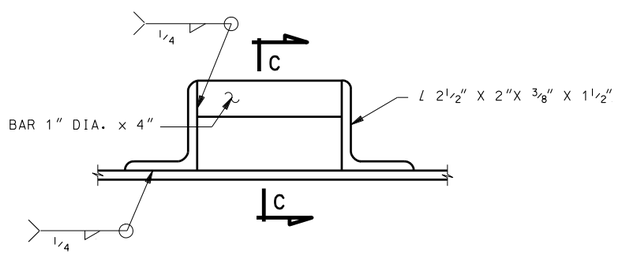


ALTERNATE HANGER ROD DETAIL

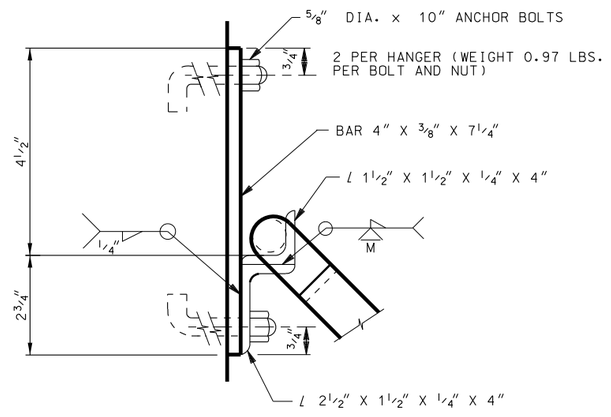


DETAIL "A"
**(ALTERNATE HANGER DETAILS)**

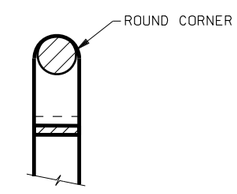


SECTION C-C

| NO. | DATE | APPR. | REMARKS |
|---|---|---|---|
| | | | |

REVISIONS

UTAH DEPARTMENT OF TRANSPORTATION
STANDARD DRAWINGS FOR ROAD AND BRIDGE CONSTRUCTION
SALT LAKE CITY, UTAH

RECOMMENDED FOR APPROVAL — JAN.01,2008 DATE
CHAIRMAN STANDARDS COMMITTEE
APPROVED — JAN.01,2008 DATE
DEPUTY DIRECTOR

STANDARD TRASH RACKS
STANDARD DRAWING TITLE

STD DWG
GF 11

DGN File: L:\Standard_Drawings\Imperial\2008Approved\Grates Frames and Trash Racks (GF)\GF11.dgn
18-DEC-2007