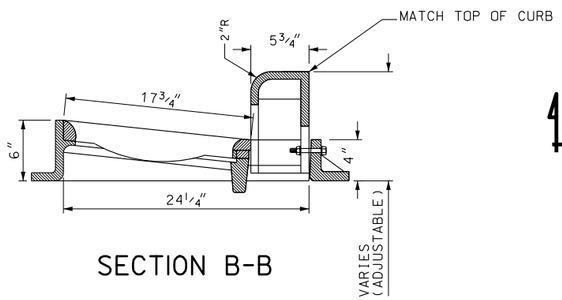

SECTION B-B

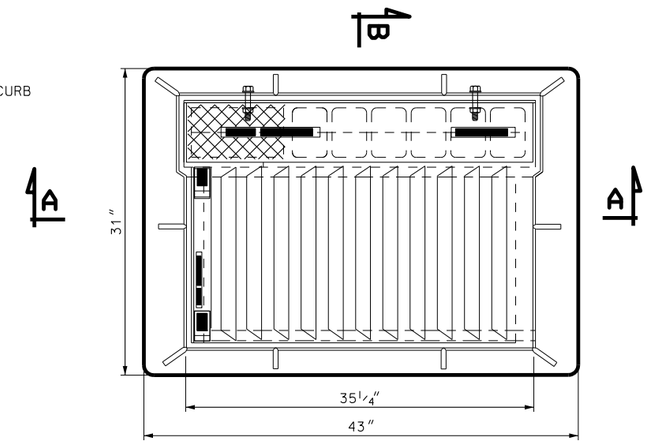

PLAN

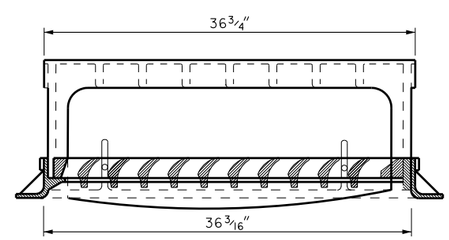

SECTION A-A

NOTES:

1. CAST GRAY IRON PER ASTM A 48 (AASHTO M 105 & M 306) CLASS 35B OR APPROVED EQUAL.
2. DIMENSION OF THE GRATE AND FRAME MAY VARY ± 5% OF SPECIFIED.

DESIGN DATA

HS-20 OR INTERSTATE ALTERNATE LOADING IN ACCORDANCE WITH AASHTO 17th EDITION SPECIFICATIONS.

NO.	DATE	APPR.	REMARKS

REVISIONS

UTAH DEPARTMENT OF TRANSPORTATION
STANDARD DRAWINGS FOR ROAD AND BRIDGE CONSTRUCTION
SALT LAKE CITY, UTAH

RECOMMENDED FOR APPROVAL — JAN.01,2008 DATE
CHAIRMAN STANDARDS COMMITTEE APPROVED — JAN.01,2008 DATE
DEPUTY DIRECTOR

OPEN CURB INLET
GRATE AND FRAME

STD DWG
GF 13

DGN File:L:\Standard Drawings\Imperial\2008Approved\Grates Frames and Trash Racks (GF)\GF13.dgn
18-DEC-2007