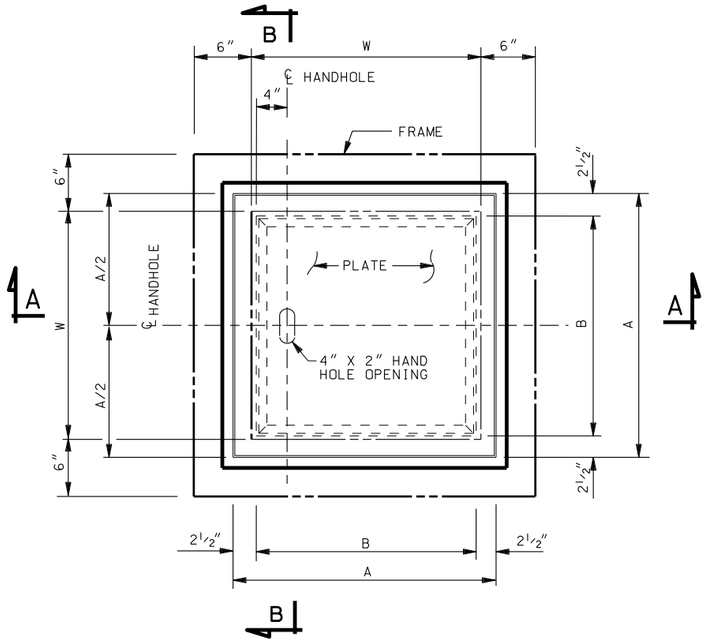


PLAN

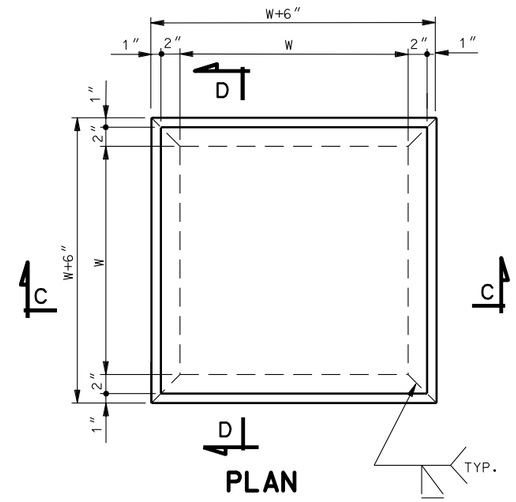


PLAN

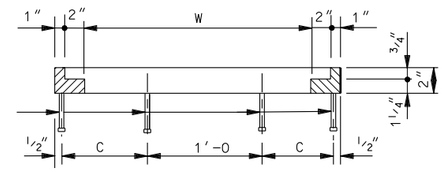


SECTION C-C
SECTION D-D SIMILAR

FRAME DETAILS

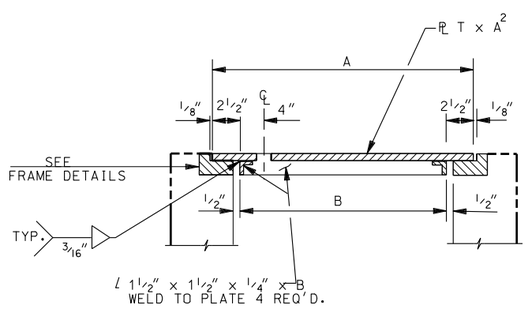


SECTION A-A

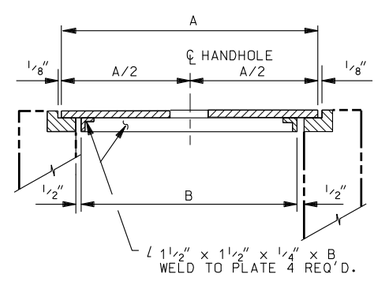


SECTION B-B

COVER DETAILS

## NOTE:

ALL STRUCTURAL STEEL: STRUCTURAL CARBON STEEL CONFORMING TO AASHTO DESIGNATION M 270, GRADE 36. AND HOT DIP GALVANIZE AFTER FABRICATION IN ACCORDANCE WITH ASTM A 123.

## DESIGN DATA

THE DESIGN IS IN ACCORDANCE WITH AASHTO AND INTERIM SPECIFICATIONS:
Fs = 20,000 psi
LIVE LOAD - HS 20-44

| DIMENSIONS | | | | | QUANTITIES (LB) | | |
|---|---|---|---|---|---|---|---|
| W | A | B | C | T | COVER | FRAME | TOTAL |
| 2′-0 | 2′-3¾ | 1′-10¾ | 8½″ | ½″ | 131 | 163 | 294 |
| 2′-6 | 2′-9¾ | 2′-4¾ | 11½″ | ⅝″ | 189 | 195 | 384 |

| NO. | DATE | APPR. | REMARKS |
|---|---|---|---|
| | | | |

REVISIONS

UTAH DEPARTMENT OF TRANSPORTATION
STANDARD DRAWINGS FOR ROAD AND BRIDGE CONSTRUCTION
SALT LAKE CITY, UTAH

RECOMMENDED FOR APPROVAL — JAN.01,2008 DATE
CHAIRMAN STANDARDS COMMITTEE
APPROVED — JAN.01,2008 DATE
DEPUTY DIRECTOR

SOLID COVER FOR
STD DWG DB 1
MS-18 LOADING

STD DWG
GF 14

DGN File:L:\Standard Drawings\Imperial\2008approved\Grates Frames and Trash Racks (GF)\GF14.dgn
18-DEC-2007