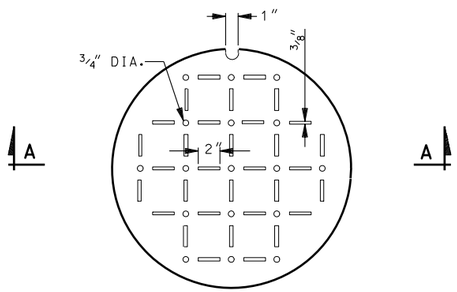

SOLID COVER PLAN

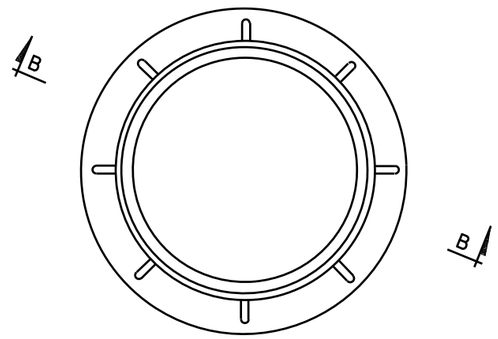

FRAME PLAN

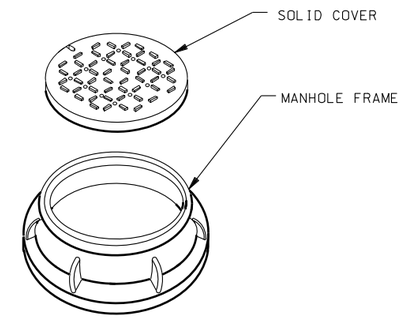

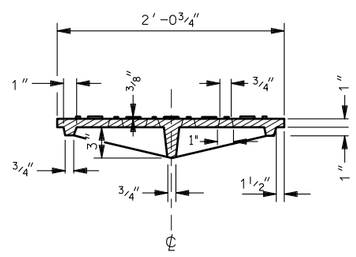

SECTION A-A

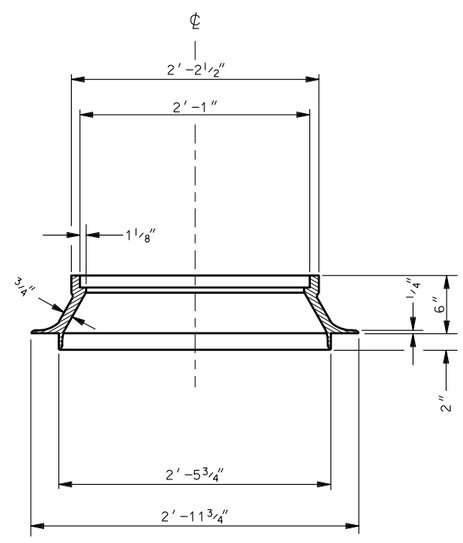

SECTION B-B

NOTES:

1. FURNISH MANHOLE FRAME AND COVER IN CAST GRAY IRON CONFORMING WITH AASHTO DESIGNATION M 105, CLASS 30B.
2. USE PRECAST CONCRETE GRADE RINGS TO ACHIEVE FINISH GRADE ELEVATION. PRECAST GRADE RING ARE FURNISHED IN HEIGHTS OF 4",6" AND 8". TOTAL HEIGHT OF GRADE RINGS NOT TO EXCEED 1'-0". ALL PRECAST GRADE RINGS CONFORM WITH AASHTO DESIGNATION M 199.
3. ESTIMATED WEIGHT OF FRAME AND COVER 402 LBS.

DESIGN DATA

MS-18 (HS-20) OR INTERSTATE ALTERNATE LOADING IN ACCORDANCE WITH CURRENT AASHTO AND INTERIM SPECIFICATIONS.

REVISIONS

NO.	DATE	APPR.	REMARKS

UTAH DEPARTMENT OF TRANSPORTATION
STANDARD DRAWINGS FOR ROAD AND BRIDGE CONSTRUCTION
SALT LAKE CITY, UTAH

RECOMMENDED FOR APPROVAL — JAN.01,2008 DATE
CHAIRMAN STANDARDS COMMITTEE APPROVED — JAN.01,2008 DATE
DEPUTY DIRECTOR

MANHOLE FRAME AND SOLID COVER
STANDARD DRAWING TITLE

STD DWG
GF 2

DGN File:L:\Standard Drawings\Imperial\2008Approved\Grates Frames and Trash Racks (GF)\GF02.dgn
18-DEC-2007