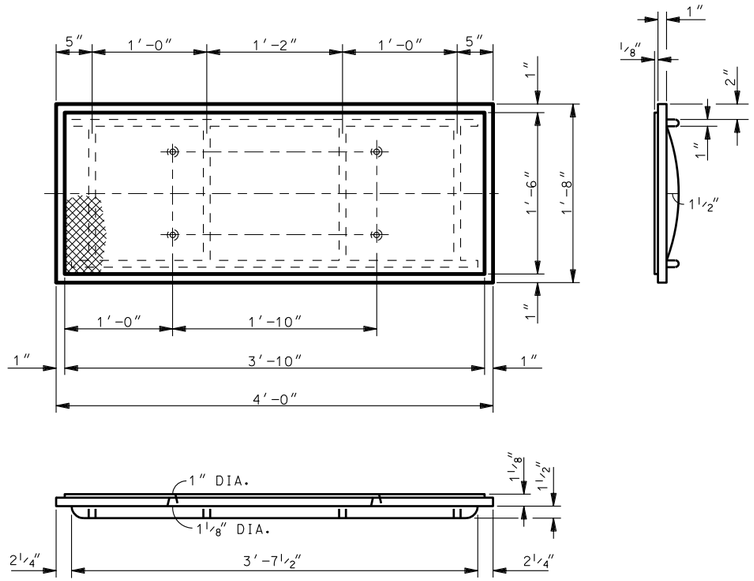

SOLID COVER DETAILS

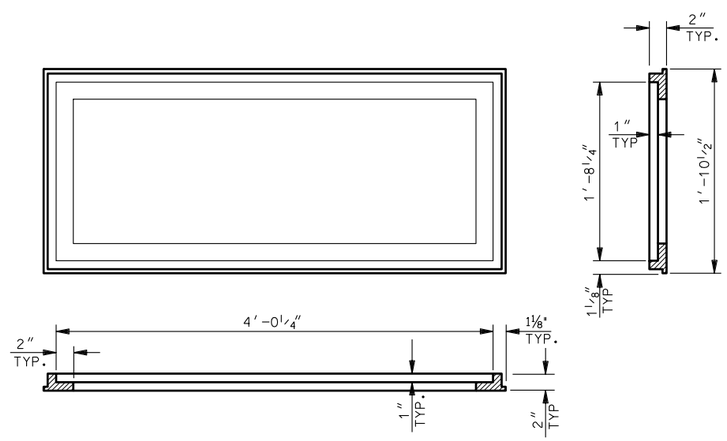

FRAME DETAILS

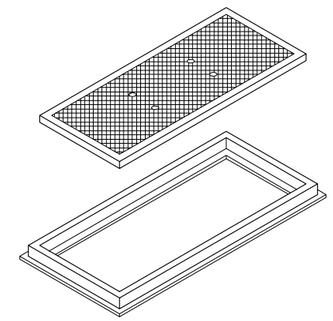

NOTES:

1. FURNISH SOLID COVER AND FRAME IN EITHER DUCTILE IRON (ASTM A 536, GRADE 60) OR CAST GRAY IRON: AASHTO M 105, CLASS 30B (ASTM A 48)
2. INSTALLATION REQUIRES SUPPORT UNDER LONGITUDINAL AXIS OF FRAME, ORIENT GRATE WITH DIRECTION OF FLOW.

DESIGN DATA

MS 18 (HS-20) OR INTERSTATE ALTERNATE LOADING IN ACCORDANCE WITH CURRENT AASHTO AND INTERIM SPECIFICATIONS.

DUCTILE IRON AND STRUCTURAL STEEL: Fs = 20,000 psi

NO.	DATE	APPR.	REMARKS

REVISIONS

UTAH DEPARTMENT OF TRANSPORTATION
STANDARD DRAWINGS FOR ROAD AND BRIDGE CONSTRUCTION
SALT LAKE CITY, UTAH

RECOMMENDED FOR APPROVAL — JAN.01,2008 DATE
CHAIRMAN STANDARDS COMMITTEE APPROVED — JAN.01,2008 DATE
DEPUTY DIRECTOR

SOLID COVER AND FRAME

STANDARD DRAWING TITLE

STD DWG
GF 5

DGN File:L:\Standard Drawings\Imperial\2008Approved\Grates Frames and Trash Racks (GF)\GF05.dgn
18-DEC-2007