DOWEL BAR RETROFIT

DESCRIPTION:
THIS REPAIR IS INTENDED TO BE USED TO ESTABLISH/RESTORE LOAD TRANSFER AT JOINTS OR CRACKS

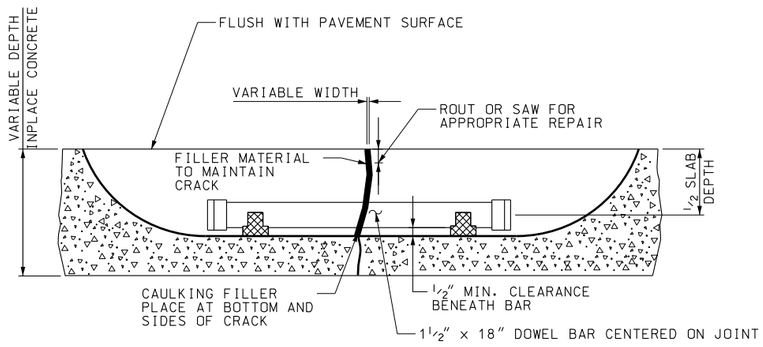

NOTES:

1. PROVIDE 1/2" MINIMUM CLEARANCE AROUND BAR EXCEPT FOR DEPTH OF COVER.

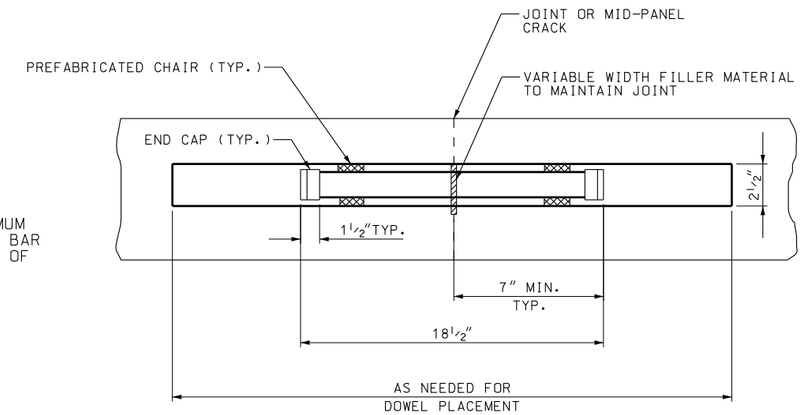

TYPICAL RETROFIT DOWEL LAYOUT (FOR JOINT)

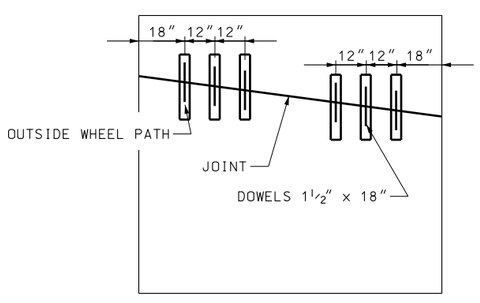

TYPICAL LANE

NOTES:

1. PROVIDE DOWEL BARS PARALLEL TO THE CENTERLINE AND TO THE PAVEMENT SURFACE.
2. LIMIT DEVIATIONS FROM PARALLEL TO 1/4" IN THE LENGTH OF THE DOWEL BARS.

TYPICAL RETROFIT DOWEL LAYOUT (FOR MID-PANEL CRACK)

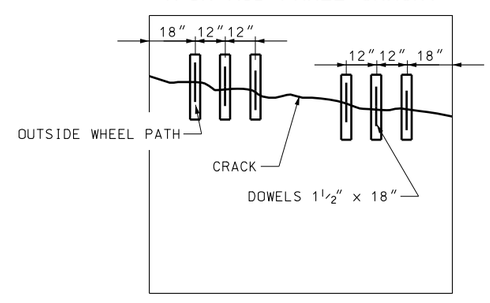

REVISIONS

NO.	DATE	APPR.	REMARKS

UTAH DEPARTMENT OF TRANSPORTATION
STANDARD DRAWINGS FOR ROAD AND BRIDGE CONSTRUCTION
SALT LAKE CITY, UTAH

RECOMMENDED FOR APPROVAL — JAN.01,2008 DATE
CHAIRMAN STANDARDS COMMITTEE
APPROVED — JAN.01,2008 DATE
DEPUTY DIRECTOR

DOWEL BAR RETROFIT
STANDARD DRAWING TITLE

STD DWG
PV 9

DGN File:L:\Standard Drawings\Imperial\2008Approved\Paving (PV)\PV09.dgn
18-DEC-2007