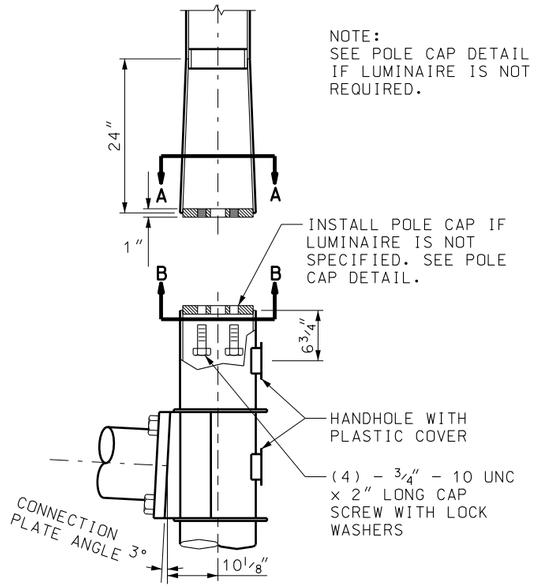

70' THRU 75' ARM POLE EXTENSION AND CONNECTION DETAIL

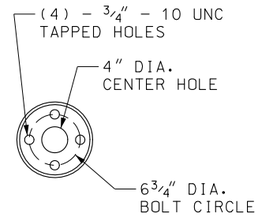

SECTION A-A

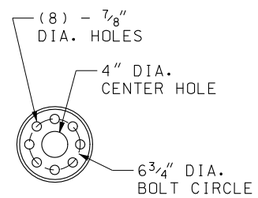

SECTION B-B

DESIGN INFORMATION

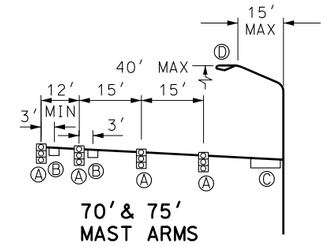

70' & 75' MAST ARMS

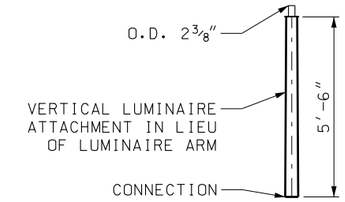

VERTICAL LUMINAIRE ATTACHMENT

DEVICE	DESCRIPTION/SIZE	PROJECTED AREA (SF)	WEIGHT(LBS)
Ⓐ SIGNAL	12", 3-SECTION WITH BACK PLATE	8.7	55
Ⓑ SIGN	REGULATORY 24" x 30"	5.0	20
Ⓒ SIGN	STREET NAME 22" x 96" (MAX)	10.7	43
Ⓓ LUMINAIRE	ROADWAY LUMINAIRE	3.3	65

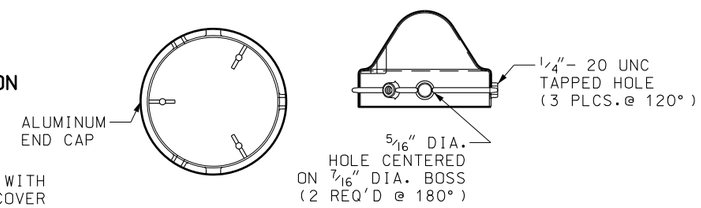

ARM END CAP DETAIL

POLE CAP DETAIL

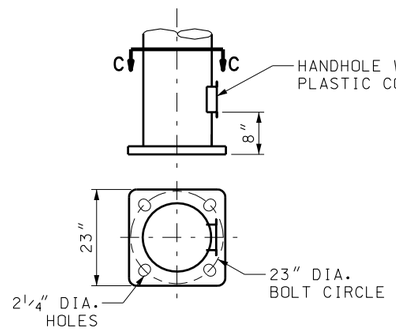

SECTION C-C
TYPICAL BASE PLATE DETAIL

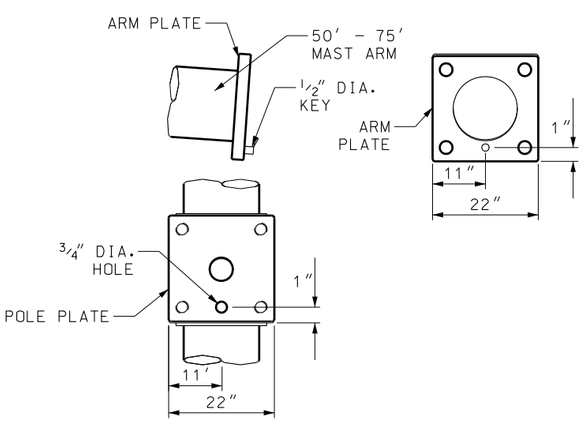

50' THRU 75' ARM AND POLE KEY DETAIL

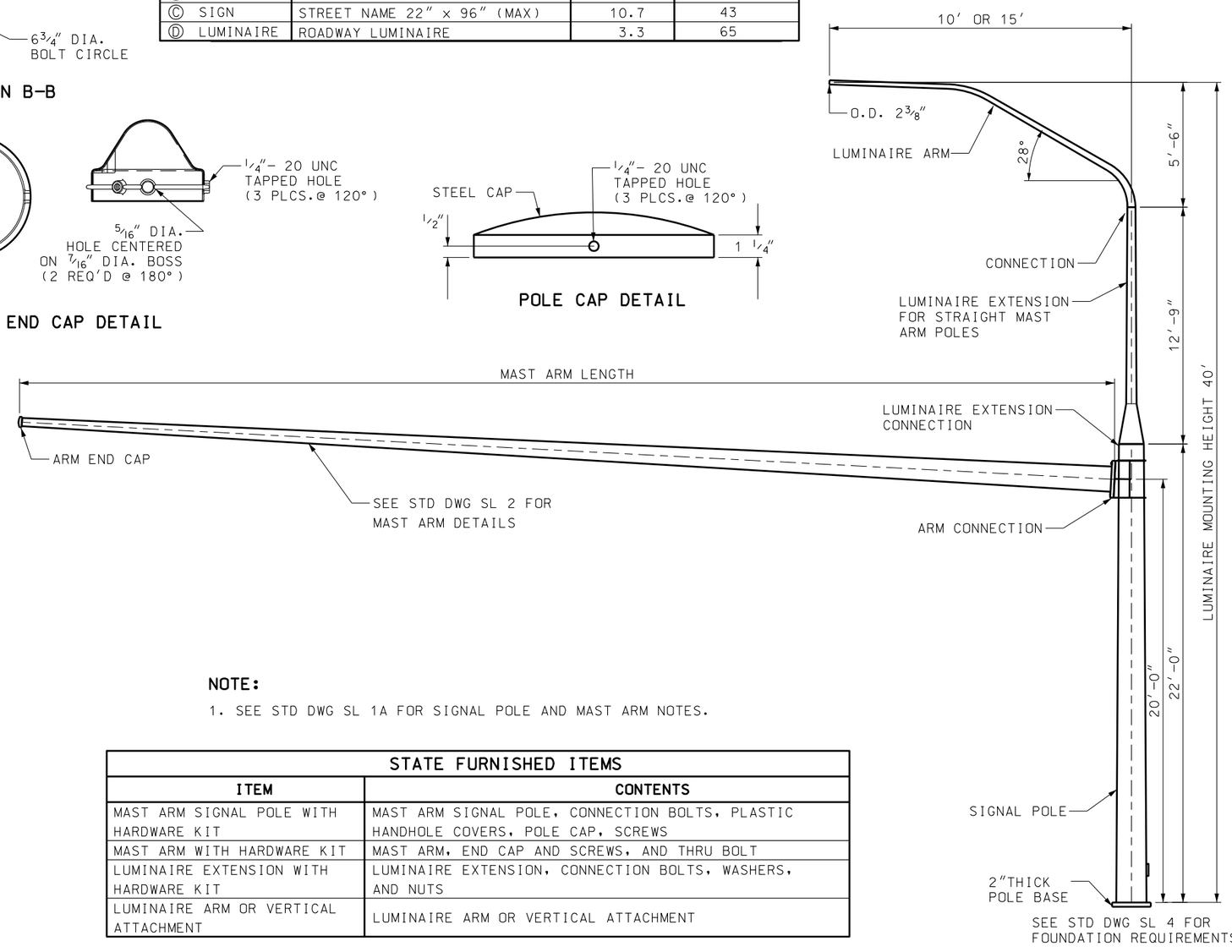

NOTE:

1. SEE STD DWG SL 1A FOR SIGNAL POLE AND MAST ARM NOTES.

STATE FURNISHED ITEMS	
ITEM	**CONTENTS**
MAST ARM SIGNAL POLE WITH HARDWARE KIT	MAST ARM SIGNAL POLE, CONNECTION BOLTS, PLASTIC HANDHOLE COVERS, POLE CAP, SCREWS
MAST ARM WITH HARDWARE KIT	MAST ARM, END CAP AND SCREWS, AND THRU BOLT
LUMINAIRE EXTENSION WITH HARDWARE KIT	LUMINAIRE EXTENSION, CONNECTION BOLTS, WASHERS, AND NUTS
LUMINAIRE ARM OR VERTICAL ATTACHMENT	LUMINAIRE ARM OR VERTICAL ATTACHMENT

REVISIONS

NO.	DATE	APPR.	REMARKS

UTAH DEPARTMENT OF TRANSPORTATION
STANDARD DRAWINGS FOR ROAD AND BRIDGE CONSTRUCTION

RECOMMENDED FOR APPROVAL — JAN.01.2008 DATE
CHAIRMAN STANDARDS COMMITTEE APPROVED — JAN.01.2008 DATE
DEPUTY DIRECTOR

TRAFFIC SIGNAL MAST ARM POLE AND LUMINAIRE EXTENSION
STANDARD DRAWING TITLE

STD DWG
SL 1B

DGN File:L:\Standard Drawings\Imperial\2008Approved\Signals\SL\SL01B.dgn
18-DEC-2007