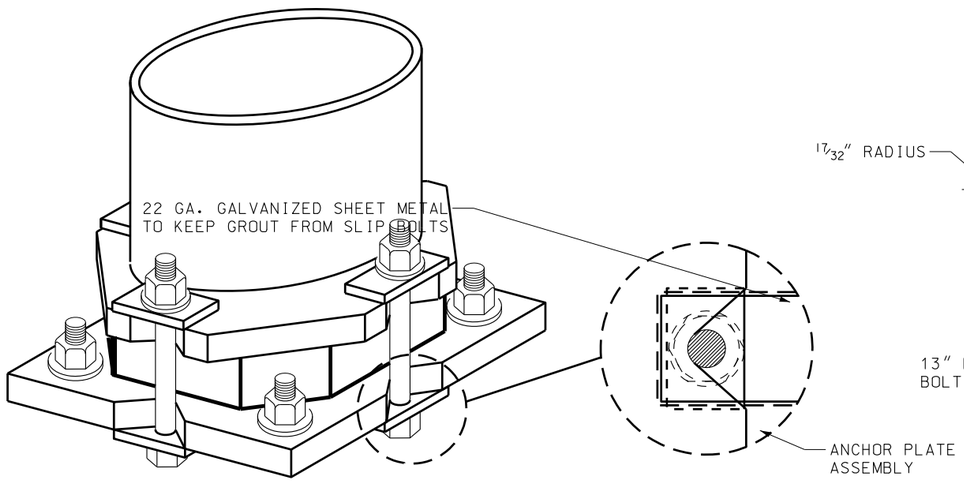

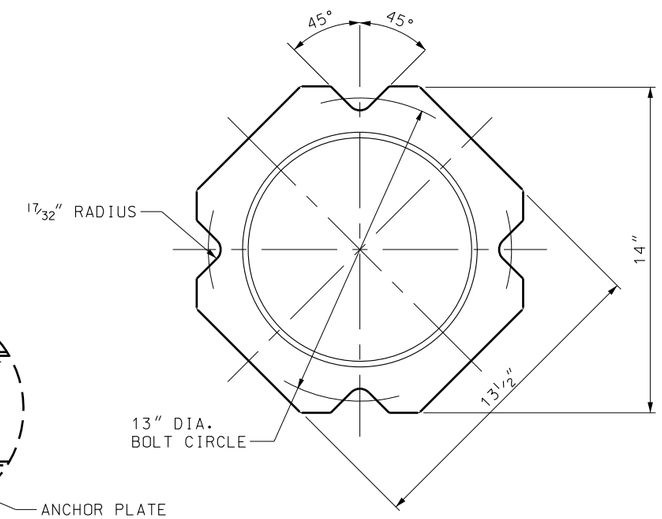

POLE BASE PLATE

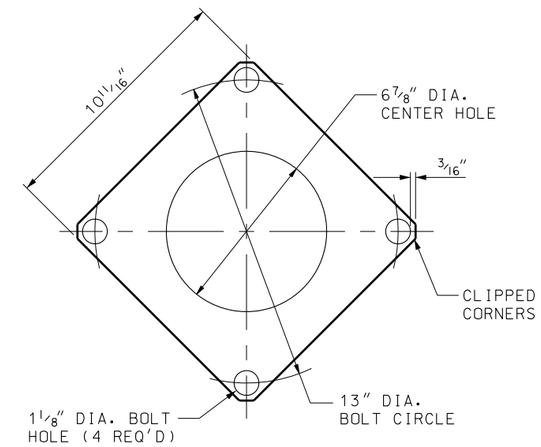

KEEPER PLATE
(28 GAUGE STAINLESS STEEL)

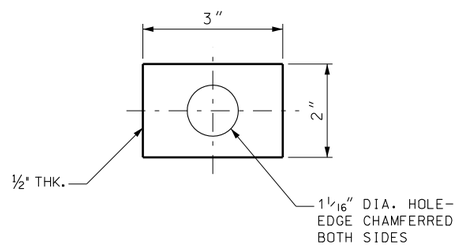

PLATE WASHER

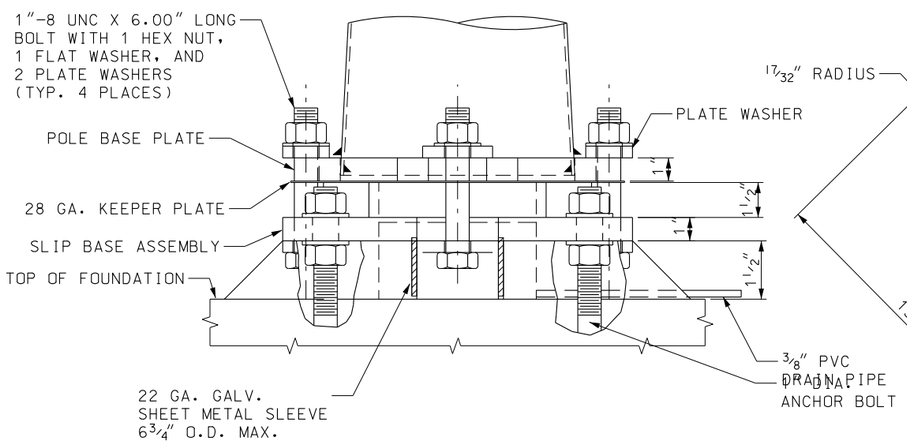

SLIP BASE DETAIL

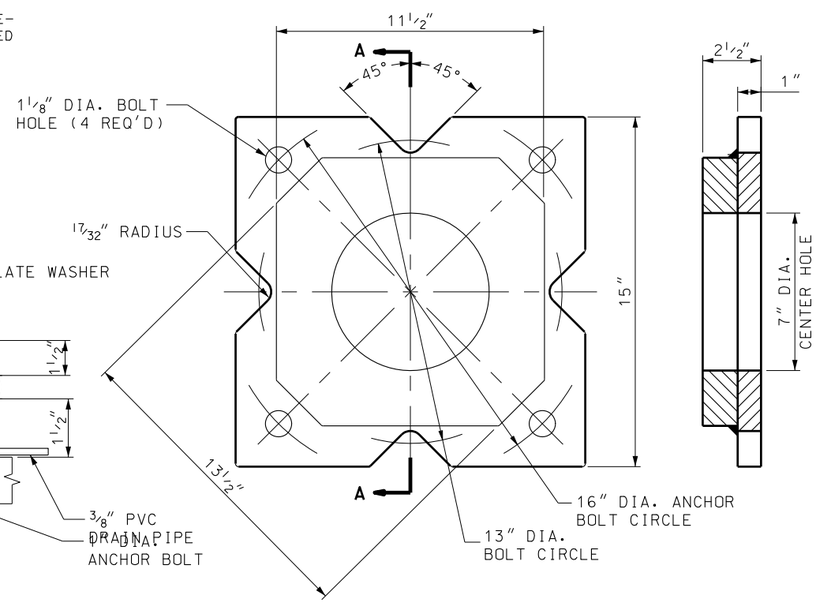

SLIP BASE ASSEMBLY

SECTION A – A

NOTES:

1. PLACE ANCHOR PLATE ASSEMBLY ON ANCHOR BOLT LEVELING NUTS AND SECURE IN PLACE.
2. ERECT LIGHT POLE AND SECURE WITH 1 INCH DIA. HIGH STRENGTH BOLTS. INSTALL BOLTS IN THE SLOTS SO THE BOLT SHANKS ARE IN CONTACT WITH THE LIGHT POLE PLATE AND ANCHOR PLATE ASSEMBLY.
3. ALL STEEL MATERIALS INCLUDING ANCHOR BOLT THREADS ARE HOT-DIPPED GALVANIZED. AVOID DAMAGING THE GALVANIZED FINISH OF MATERIALS DURING TRANSPORT AND PLACEMENT.
4. TORQUE ALL SLIP BOLTS TO 80 FT LBS, RELEASE AND RETORQUE TO 70 FT LBS.
5. INSTALL DRY PACK GROUT AFTER LIGHT POLE IS PLACED IN FINAL POSITION.

REVISIONS

NO.	DATE	APPR.	REMARKS

UTAH DEPARTMENT OF TRANSPORTATION
STANDARD DRAWINGS FOR ROAD AND BRIDGE CONSTRUCTION
SALT LAKE CITY, UTAH

RECOMMENDED FOR APPROVAL — JAN.01,2008 DATE
CHAIRMAN STANDARDS COMMITTEE
APPROVED — JAN.01,2008 DATE
DEPUTY DIRECTOR

LUMINAIRE
SLIP BASE
DETAILS
STANDARD DRAWING TITLE

STD DWG
SL 15

DGN File:L:\Standard\Drawings\Imperial\2008\Approved\Signals (SL)\SL15.dgn
18-DEC-2007