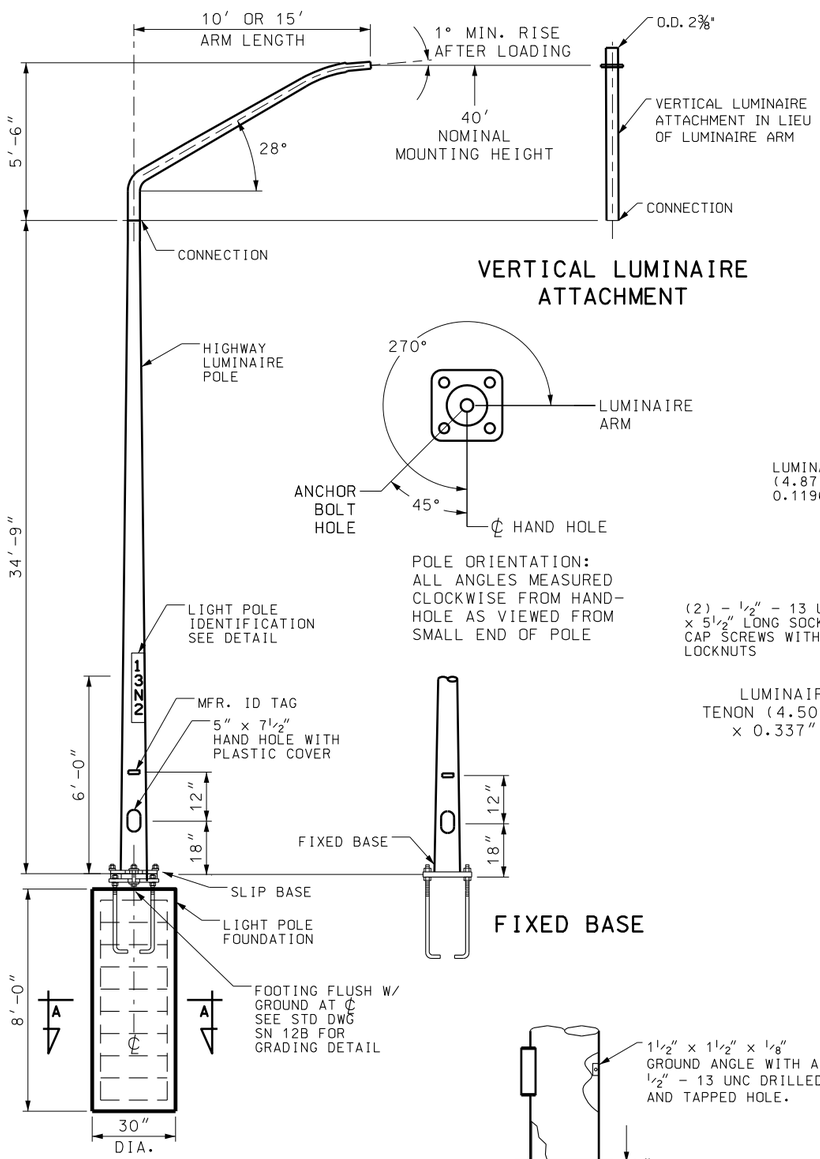

VERTICAL LUMINAIRE ATTACHMENT

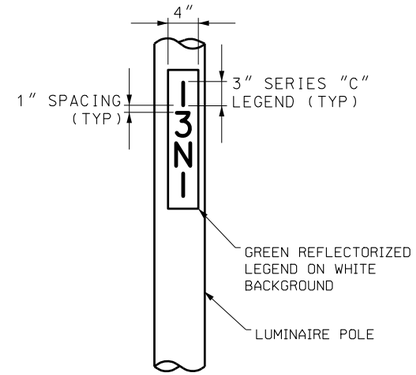

LUMINAIRE POLE IDENTIFICATION DETAIL

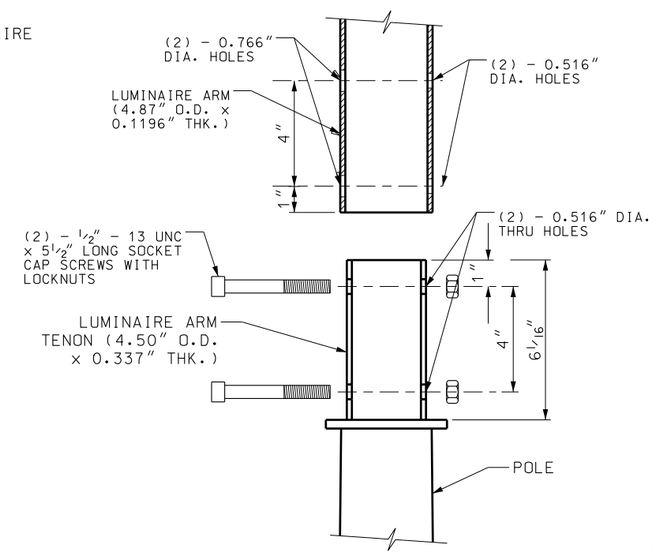

LUMINAIRE ARM/ATTACHMENT CONNECTION

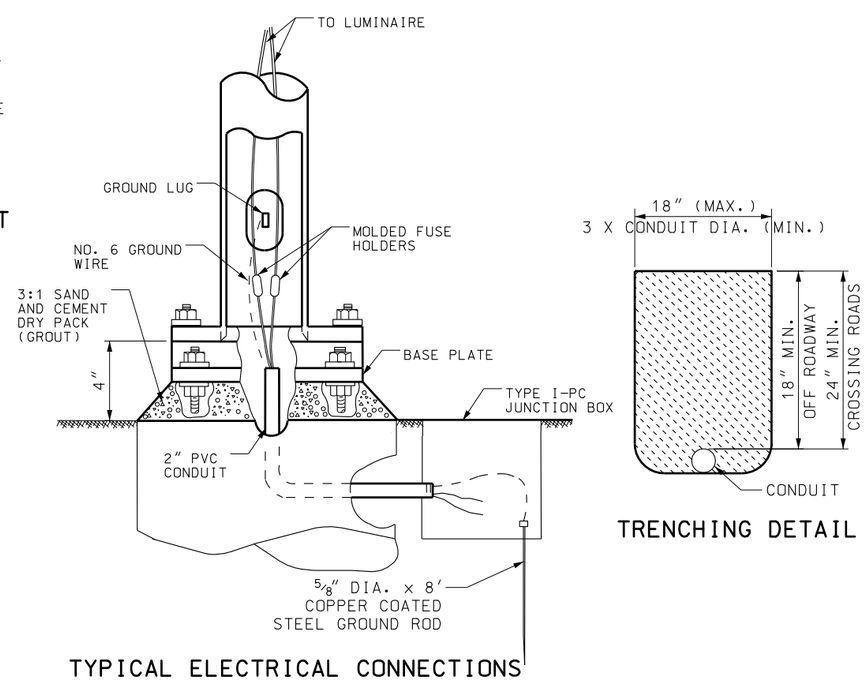

TRENCHING DETAIL

TYPICAL ELECTRICAL CONNECTIONS

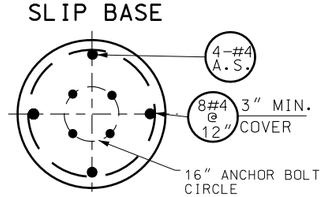

SECTION A-A REINFORCEMENT

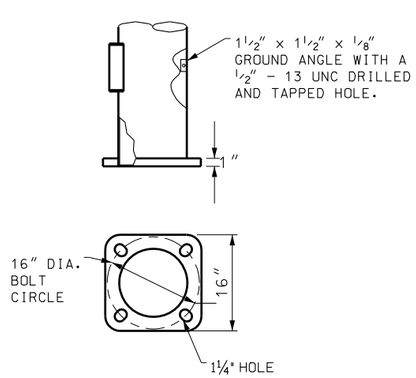

FIXED BASE PLATE DETAIL

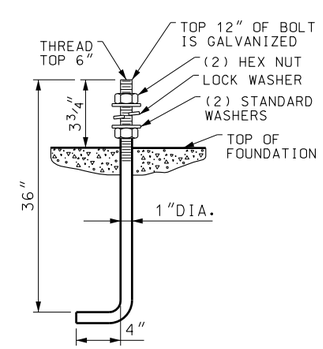

ANCHOR BOLT

NOTES:

1. LIGHT POLE ASSEMBLY CONSISTS OF A POLE, ARM, BASE, INTERNAL CONDUCTORS, IDENTIFICATION, SPLICES, MOLDED CONNECTORS, FUSE HOLDERS, ANCHOR BOLTS, HARDWARE AND SLIP BASE OR FIXED BASE.
2. LIGHT POLE WITH BASE, LUMINAIRE ARM OR VERTICAL ATTACHMENT, ANCHOR BOLTS, AND RELATED HARDWARE ARE STATE FURNISHED ITEMS.
3. ALL STEEL MATERIALS INCLUDING ANCHOR BOLT THREADS ARE HOT-DIPPED GALVANIZED. AVOID DAMAGING THE GALVANIZED FINISH OF MATERIALS DURING TRANSPORT AND PLACEMENT.
4. ORIENT ALL ARM EXTENSIONS AT RIGHT ANGLES TO THE SURVEY LINE OF ROADWAY.
5. CENTER SHAFT TOP OVER CENTER OF FOUNDATION AFTER ARM EXTENSION, LUMINAIRE AND ALL ELECTRICAL ACCESSORIES ARE IN PLACE.
6. LOCATE LIGHT POLE BEHIND SIGNS WHEN THERE IS CONFLICT.
7. USE EPOXY COATED REBARS AND CLASS AA(AE) CONCRETE FOR ALL FOUNDATIONS.
8. USE BREAKAWAY BASE ON ALL LIGHT POLES EXCEPT THOSE LOCATED ON STRUCTURES OR SPECIFIED ON PLANS. SEE STD DWG SL 15 FOR BREAKAWAY BASE DETAILS.

STATE FURNISHED ITEMS	
ITEM	CONTENTS
SLIP BASE HIGHWAY LUMINAIRE POLE WITH HARDWARE KIT	SLIP BASE LUMINAIRE POLE, SLIP BASE ASSEMBLY, KEEPER PLATE, PLATE WASHERS, PLASTIC HANDHOLE COVER, CONNECTION BOLTS, WASHERS, AND NUTS
FIXED BASE HIGHWAY LUMINAIRE POLE WITH HARDWARE KIT	FIXED BASE LUMINAIRE POLE, PLASTIC HANDHOLE COVER, CONNECTION BOLTS, WASHERS, AND NUTS.
LUMINAIRE ARM OR VERTICAL ATTACHMENT	LUMINAIRE ARM OR VERTICAL ATTACHMENT
1″ DIA. x 36″ ANCHOR BOLT WITH HARDWARE	ANCHOR BOLT, WASHERS, AND NUTS.

REVISIONS

NO.	DATE	APPR.	REMARKS

UTAH DEPARTMENT OF TRANSPORTATION
STANDARD DRAWINGS FOR ROAD AND BRIDGE CONSTRUCTION
SALT LAKE CITY, UTAH

RECOMMENDED FOR APPROVAL — JAN.01,2008 DATE
CHAIRMAN STANDARDS COMMITTEE
APPROVED — JAN.01,2008 DATE
DEPUTY DIRECTOR

HIGHWAY LUMINAIRE POLE GROUND MOUNT
STANDARD DRAWING TITLE

STD DWG
SL 14

DGN File:L:\Standard Drawings\Imperial\2008\approved\Signals (SL)\SL14.dgn
18-DEC-2007