SIGN PANEL – POST – FOUNDATION TABLE

SIGN WIDTH (W)

SIGN HEIGHT (H)	ONE POST 3′-0″	ONE POST 4′-0″	ONE POST 5′-0″	TWO POSTS 6′-0″	TWO POSTS 7′-0″	TWO POSTS 8′-0″	TWO POSTS 9′-0″	TWO POSTS 10′-0″	TWO POSTS 11′-0″	TWO POSTS 12′-0″	TWO POSTS 13′-0″	TWO POSTS 14′-0″	TWO POSTS 15′-0″	TWO POSTS 16′-0″
1′-0″	USE OF "Z" BAR, EXCEPT FOR MULTI PANEL SIGN, AS PER STD DWG SN 13C PERMITTED FOR THESE SIGN APPLICATIONS WITHIN DASHED LINE AREA.			S3X5.7 3′-0″	S3X5.7 3′-0″	S3X5.7 3′-0″	S3X5.7 3′-0″	S3X5.7 3′-0″	S3X5.7 3′-0″	S3X5.7 3′-0″	S3X5.7 3′-0″	S3X5.7 3′-0″	S3X5.7 3′-0″	S3X5.7 3′-0″
1′-6″				S3X5.7 3′-0″	S3X5.7 3′-0″	S3X5.7 3′-0″	S3X5.7 3′-0″	S3X5.7 3′-0″	S3X5.7 3′-0″	S3X5.7 3′-0″	S3X5.7 3′-0″	S3X5.7 3′-0″	S4X9.5 3′-0″	S4X9.5 3′-0″
2′-0″				S3X5.7 3′-0″	S3X5.7 3′-0″	S3X5.7 3′-0″	S3X5.7 3′-0″	S3X5.7 3′-0″	S4X9.5 3′-0″	S4X9.5 3′-0″	S4X9.5 3′-0″	S4X9.5 3′-0″	S4X9.5 3′-0″	S4X9.5 3′-0″
2′-6″				S3X5.7 3′-0″	S3X5.7 3′-0″	S3X5.7 3′-0″	S4X9.5 3′-0″	S4X9.5 3′-0″	S4X9.5 3′-0″	S4X9.5 3′-0″	S4X9.5 3′-0″	S4X9.5 3′-0″	S4X9.5 3′-0″	S4X9.5 3′-0″
3′-0″	3″Ø 3′-0″	3″Ø 3′-0″	4″Ø 3′-0″	S3X5.7 3′-0″	S3X5.7 3′-0″	S4X9.5 3′-0″	S4X9.5 3′-0″	S4X9.5 3′-0″	S4X9.5 3′-0″	S4X9.5 3′-0″	S4X9.5 3′-0″	S6X12.5 3′-6″	S6X12.5 3′-6″	S6X12.5 3′-6″
4′-0″	3″Ø 3′-6″	4″Ø 3′-6″	4″Ø 3′-6″	S4X9.5 3′-6″	S4X9.5 3′-6″	S4X9.5 3′-6″	S4X9.5 4′-0″	S4X9.5 4′-0″	S6X12.5 3′-6″	S6X12.5 3′-6″	S6X12.5 3′-6″	S6X12.5 3′-6″	S6X12.5 3′-6″	S6X12.5 3′-6″
5′-0″	4″Ø 3′-6″	4″Ø 3′-6″	5″Ø 3′-6″	S4X9.5 3′-6″	S4X9.5 4′-0″	S4X9.5 4′-0″	S6X12.5 4′-0″	S6X12.5 4′-0″	S6X12.5 4′-0″	S6X12.5 4′-0″	S6X12.5 4′-0″	S6X12.5 4′-0″	S6X12.5 4′-0″	S6X12.5 4′-0″
6′-0″	4″Ø 3′-0″	5″Ø 3′-6″	5″Ø 3′-6″	S4X9.5 4′-0″	S6X12.5 4′-0″	S6X12.5 4′-0″	S6X12.5 4′-0″	S6X12.5 4′-0″	S6X12.5 4′-0″	S6X12.5 4′-0″	S6X12.5 4′-0″	S6X17.5 4′-0″	S6X17.5 4′-6″	S8X18.4 4′-6″
7′-0″	4″Ø 3′-6″	5″Ø 3′-6″	5″Ø 3′-6″	S6X12.5 4′-0″	S6X12.5 4′-0″	S6X12.5 4′-0″	S6X12.5 4′-0″	S6X12.5 4′-0″	S6X12.5 4′-0″	S6X17.5 4′-0″	S6X17.5 4′-6″	S8X18.4 4′-6″	S8X18.4 4′-6″	S8X18.4 5′-0″
8′-0″	5″Ø 3′-6″	5″Ø 3′-6″	6″Ø 4′-0″	S6X12.5 4′-0″	S6X12.5 4′-0″	S6X12.5 4′-0″	S6X12.5 4′-0″	S6X12.5 4′-0″	S6X17.5 4′-6″	S8X18.4 4′-6″	S8X18.4 4′-6″	S8X18.4 5′-0″	S8X18.4 5′-0″	S8X18.4 5′-6″
9′-0″	5″Ø 3′-6″	6″Ø 4′-0″	6″Ø 4′-0″	S6X12.5 4′-0″	S6X12.5 4′-0″	S6X12.5 4′-0″	S6X17.5 4′-0″	S6X17.5 4′-6″	S8X18.4 4′-6″	S8X18.4 5′-0″	S8X18.4 5′-0″	S8X18.4 5′-6″	S8X18.4 5′-6″	S8X18.4 5′-6″
10′-0″	5″Ø 3′-6″	6″Ø 4′-0″	6″Ø 4′-6″	S6X12.5 4′-0″	S6X12.5 4′-0″	S6X17.5 4′-6″	S6X17.5 4′-6″	S8X18.4 5′-0″	S8X18.4 5′-0″	S8X18.4 5′-6″	S8X18.4 5′-6″	S8X18.4 6′-0″	W10X19.0 6′-0″	W10X19.0 6′-0″
11′-0″				S6X12.5 4′-0″	S6X17.5 4′-6″	S6X17.5 4′-6″	S8X18.4 5′-0″	S8X18.4 5′-0″	S8X18.4 5′-6″	S8X18.4 5′-6″	W10X19.0 6′-0″	W10X19.0 6′-0″	W10X19.0 6′-6″	W10X19.0 7′-0″
12′-0″				S6X12.5 4′-0″	S6X17.5 4′-6″	S6X18.4 4′-6″	S8X18.4 5′-0″	S8X18.4 5′-0″	S8X18.4 5′-6″	W10X19.0 6′-0″	W10X19.0 6′-0″	W10X19.0 6′-6″	W10X22.0 6′-6″	W10X22.0 7′-0″
13′-0″				S6X17.5 4′-0″	S8X18.4 4′-6″	S8X18.4 5′-0″	S8X18.4 5′-0″	S8X18.4 5′-6″	W10X19.0 6′-0″	W10X19.0 6′-0″	W10X19.0 6′-6″	W10X22.0 6′-6″	W10X22.0 7′-0″	W10X22.0 7′-0″
14′-0″				S6X17.5 4′-6″	S8X18.4 5′-0″	S8X18.4 5′-0″	S8X18.4 5′-6″	W10X19.0 6′-0″	W10X19.0 6′-0″	W10X19.0 6′-6″	W10X22.0 6′-6″	W10X22.0 7′-0″	W10X26.0 7′-6″	W10X26.0 7′-6″
15′-0″				S8X18.4 4′-6″	S8X18.4 5′-0″	S8X18.4 5′-6″	S8X18.4 5′-6″	W10X19.0 6′-0″	W10X19.0 6′-6″	W10X22.0 6′-6″	W10X22.0 7′-0″	W10X26.0 7′-6″	W10X30.0 7′-6″	W10X30.0 8′-0″
16′-0″				S8X18.4 5′-0″	S8X18.4 5′-0″	S8X18.4 5′-6″		W10X19.0 6′-6″	W10X22.0 6′-6″	W10X22.0 7′-0″	W10X26.0 7′-6″	W10X30.0 7′-6″	W10X30.0 8′-0″	W10X30.0 8′-6″
17′-0″				USE 10′ WIDTH IF SIZE FALLS IN THIS AREA										

SIGN HEIGHT (H)	THREE POSTS 17′-0″	THREE POSTS 18′-0″	THREE POSTS 19′-0″	THREE POSTS 20′-0″	THREE POSTS 21′-0″	THREE POSTS 22′-0″	THREE POSTS 23′-0″	THREE POSTS 24′-0″
1′-0″	S3X5.7 3′-0″	S3X5.7 3′-0″	S3X5.7 3′-0″	S3X5.7 3′-0″	S3X5.7 3′-0″	S3X5.7 3′-0″	S3X5.7 3′-0″	S3X5.7 3′-0″
1′-6″	S3X5.7 3′-0″	S3X5.7 3′-0″	S3X5.7 3′-0″	S3X5.7 3′-0″	S4X9.5 3′-0″	S4X9.5 3′-0″	S4X9.5 3′-0″	S4X9.5 3′-0″
2′-0″	S4X9.5 3′-0″	S4X9.5 3′-0″	S4X9.5 3′-0″	S4X9.5 3′-0″	S4X9.5 3′-0″	S4X9.5 3′-0″	S4X9.5 3′-0″	S4X9.5 3′-0″
2′-6″	S4X9.5 3′-0″	S4X9.5 3′-0″	S4X9.5 3′-0″	S4X9.5 3′-0″	S4X9.5 3′-0″	S4X9.5 3′-0″	S6X12.5 3′-0″	S6X12.5 3′-0″
3′-0″	S4X9.5 3′-0″	S4X9.5 3′-0″	S4X9.5 3′-0″	S6X12.5 3′-6″	S6X12.5 3′-6″	S6X12.5 3′-6″	S6X12.5 3′-6″	S6X12.5 3′-0″
4′-0″	S6X12.5 3′-6″	S6X12.5 3′-6″	S6X12.5 3′-6″	S6X12.5 3′-6″	S6X12.5 3′-6″	S6X12.5 3′-6″	S6X12.5 3′-6″	S6X12.5 3′-6″
5′-0″	S6X12.5 3′-6″	S6X12.5 3′-6″	S6X12.5 3′-6″	S6X12.5 3′-6″	S6X12.5 4′-0″	S6X12.5 4′-0″	S6X12.5 4′-0″	S6X17.5 4′-0″
6′-0″	S6X12.5 3′-6″	S6X12.5 4′-0″	S6X12.5 4′-0″	S6X17.5 4′-0″	S6X17.5 4′-0″	S6X17.5 4′-6″	S8X18.4 4′-6″	S8X18.4 4′-6″
7′-0″	S6X17.5 4′-0″	S6X17.5 4′-0″	S6X17.5 4′-6″	S8X18.4 4′-6″	S8X18.4 4′-6″	S8X18.4 5′-0″	S8X18.4 5′-0″	S8X18.4 5′-0″
8′-0″	S8X18.4 4′-6″	S8X18.4 4′-6″	S8X18.4 4′-6″	S8X18.4 5′-0″	S8X18.4 5′-0″	S8X18.4 5′-0″	S8X18.4 5′-6″	S8X18.4 5′-6″
9′-0″	S8X18.4 5′-0″	S8X18.4 5′-0″	S8X18.4 5′-0″	S8X18.4 5′-0″	S8X18.4 5′-6″	S8X18.4 5′-6″	W10X19.0 5′-6″	W10X19.0 6′-0″
10′-0″	S8X18.4 5′-6″	S8X18.4 5′-6″	S8X18.4 6′-0″	S8X18.4 6′-0″	W10X19.0 6′-0″	W10X19.0 6′-0″	W10X19.0 6′-6″	W10X19.0 6′-6″
11′-0″	S8X18.4 5′-6″	S8X18.4 5′-6″	W10X19.0 6′-0″	W10X19.0 6′-0″	W10X19.0 6′-6″	W10X19.0 6′-6″	W10X19.0 7′-0″	W10X22.0 7′-0″
12′-0″	W10X19.0 5′-6″	W10X19.0 6′-0″	W10X19.0 6′-0″	W10X19.0 6′-6″	W10X19.0 6′-6″	W10X22.0 6′-6″	W10X22.0 7′-0″	W10X22.0 7′-0″
13′-0″	W10X19.0 6′-0″	W10X19.0 6′-0″	W10X19.0 6′-6″	W10X22.0 6′-6″	W10X22.0 7′-0″	W10X22.0 7′-0″	W10X22.0 7′-0″	W10X22.0 7′-6″
14′-0″	W10X19.0 6′-6″	W10X22.0 6′-6″	W10X22.0 7′-0″	W10X22.0 7′-0″	W10X22.0 7′-0″	W10X26.0 7′-6″	W10X26.0 7′-6″	W10X30.0 8′-0″
15′-0″	W10X22.0 6′-6″	W10X22.0 7′-0″	W10X22.0 7′-0″	W10X26.0 7′-6″	W10X26.0 7′-6″	W10X26.0 7′-6″	W10X30.0 8′-0″	W10X30.0 8′-0″
16′-0″	W10X22.0 7′-0″	W10X22.0 7′-0″	W10X26.0 7′-6″	W10X26.0 7′-6″	W10X30.0 8′-0″	W10X30.0 8′-0″	W10X30.0 8′-6″	W10X30.0 8′-6″
17′-0″								

CHART EXPLANATION

TOP NUMBER: SIZE AND WEIGHT OF SUPPORT SECTION OR DIAMETER OF STANDARD PIPE COLUMNS. Ø DENOTES PIPE DIAMETER

BOTTOM NUMBER: MINIMUM REQUIRED DEPTH OF FOUNDATION

ONE POST
SIGN WIDTH 1′ TO 5′

TWO POST	
SIGN WIDTH	POST SPACING
W	A
6′	1′- 0″
7′	1′- 0″
8′	1′- 0″
9′	1′- 0″
10′	1′- 0″
11′	1′- 6″
12′	2′- 0″
13′	2′- 6″
14′	3′- 0′
15′	3′- 6″
16′	3′- 6″

THREE POSTS		
SIGN WIDTH	POST SPACING	
W	A	B
17′	1′- 0″	7′- 6″
18′	1′- 0″	8′- 0″
19′	1′- 0″	8′- 0″
20′	2′- 0″	8′- 0″
21′	2′- 6″	8′- 0″
22′	3′- 0′	8′- 0″
23′	3′- 6″	8′- 0″
24′	4′- 0″	8′- 0″

SEE NOTES 8,9

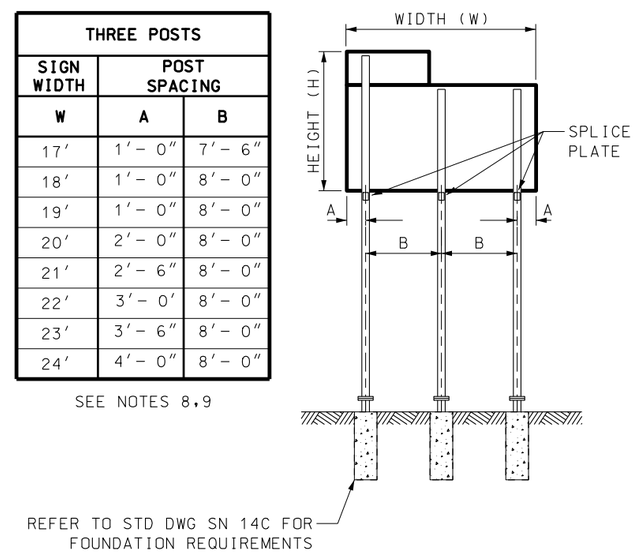

GENERAL NOTES FOR SN 14 SERIES STD DWGS:

1. CONFORM TO THE LATEST EDITION OF AASHTO STANDARD SPECIFICATIONS FOR STRUCTURAL SUPPORTS FOR HIGHWAY SIGNS, LUMINARIES AND TRAFFIC SIGNALS.
2. FABRICATE BASE, SLIP AND FUSE PLATE FROM STEEL MEETING THE REQUIREMENTS SPECIFIED FOR THE SIGN POST TO WHICH THEY ARE ATTACHED EXCEPT WHERE PIPE POSTS ARE USED, IN WHICH CASE CONFORM TO THE REQUIREMENTS OF ASTM A 36.
3. USE STRUCTURAL CARBON STEEL CONFORMING TO THE FOLLOWING ASTM DESIGNATION: STANDARD PIPE 3″ TO 8″ DIA PIPE: ASTM A 53 GRADE B, W AND S SHAPES: ASTM A 36.
4. USE BOLTS, NUTS AND WASHER CONFORMING TO ASTM A 325 UNLESS OTHERWISE NOTED.
5. WELD TO THE REQUIREMENTS OF THE AASHTO STANDARD SPECIFICATION FOR WELDING OF STRUCTURAL STEEL OF HIGHWAY BRIDGES.
6. SAW CUT OR SHEAR OF PLATES. NO FLAME CUTTING.
7. MEET AASHTO M 111 (ASTM 123) FOR GALVANIZING AFTER FABRICATION IS COMPLETED.
8. USE A MINIMUM OF 7 FEET BETWEEN POSTS WHEN POST WEIGHT EXCEEDS 18.4 POUNDS PER FOOT.
9. USE THE LOWER VALUE WHEN THE SIGN WIDTH FALLS BETWEEN TWO VALUES, FOR POST AND SPACING REQUIREMENTS.
10. REFER TO STD DWGS SN 7A AND 7B FOR SIGN HEIGHT AND SIGN OFFSET REQUIREMENTS.

REVISIONS

NO.	DATE	APPR.	REMARKS

UTAH DEPARTMENT OF TRANSPORTATION
STANDARD DRAWINGS FOR ROAD AND BRIDGE CONSTRUCTION
SALT LAKE CITY, UTAH

RECOMMENDED FOR APPROVAL — JAN.01,2008 DATE
CHAIRMAN STANDARDS COMMITTEE APPROVED — JAN.01,2008 DATE
DEPUTY DIRECTOR

FREEWAY SIGN POST REQUIREMENTS
STANDARD DRAWING TITLE

STD DWG
SN 14A

DGN Files:L:\Standard Drawings\Imperial\2008Approved\Signs (SN)\SN14A.dgn
18-DEC-2007