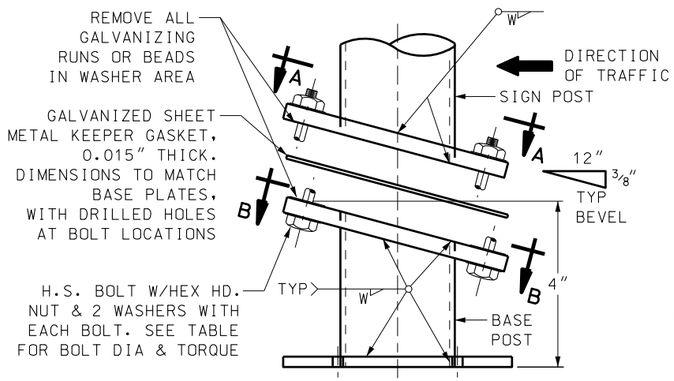

SIGN POST BASE ELEVATION FOR PIPE POSTS (B6A)

DO NOT USE INCLINE BASE WHERE THERE IS A POTENTIAL OF A BACKSIDE IMPACT

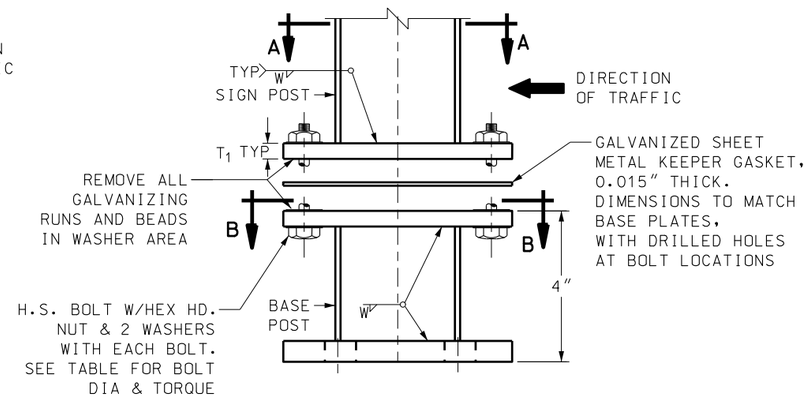

SIGN POST BASE ELEVATION FOR S (B6B) & W (B6C) SECTIONS

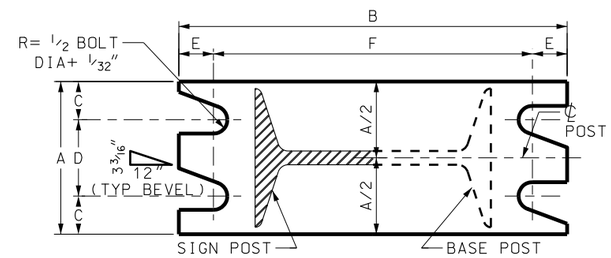

SECTION A–A SECTION B–B

(SEE TABLE FOR DIMENSIONS)

SECTIONS SHOWN ARE FOR INSTALLATIONS ON RIGHT SHOULDER AND IN GORE. PLATE SLOT BEVELS ARE OPPOSITE HAND FROM THAT SHOWN FOR INSTALLATION ON LEFT SHOULDER "S" POST IS SHOWN. PIPE POST SECTIONS ARE SIMILAR.

SIGN POST BOTTOM PLATE BASE POST TOP PLATE DETAIL

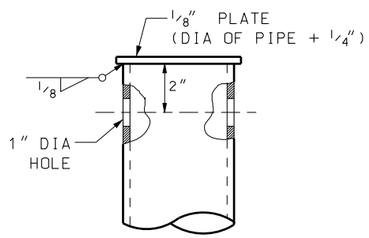

TOP OF PIPE DETAIL

BASE CONNECTION DATA TABLE									
POST SIZE	BOLT SIZE & TORQUE	A	B	C	D	E	F	T_1	W
S3 x 5.7	1/2" DIA x 2 1/2" 10 FT-LB TORQUE	3"	7 1/2"	3/4"	1 1/2"	3/4"	6"	5/8"	3/16"
S4 x 9.5		3 1/2"	7 1/2"	3/4"	2"	3/4"	6"	5/8"	1/4"
S6 x 12.5	5/8" DIA x 3" 24 FT-LB TORQUE	4 1/2"	10"	1 1/8"	2 1/4"	3/4"	8 1/2"	3/4"	5/16"
S6 x 17.5		4 1/2"	10"	1 1/8"	2 1/4"	3/4"	8 1/2"	3/4"	5/16"
S8 x 18.4		5"	12"	1 1/8"	2 3/4"	3/4"	10 1/2"	3/4"	5/16"
W10 x 19.0	3/4" DIA x 3 1/2" 38 FT-LB TORQUE	6"	1'-2 1/2"	1 1/4"	3 1/2"	7/8"	1'-0 3/4"	1"	5/16"
W10 x 22.0		7"	1'-3"	1 1/2"	4"	7/8"	1'-1 1/4"	1"	5/16"
W10 x 26.0		7"	1'-3"	1 1/2"	4"	7/8"	1'-1 1/4"	1"	5/16"
W10 x 30.0	1" DIA x 3 1/2" 51 FT-LB TORQUE	7"	1'-3"	1 1/2"	4"	7/8"	1'-1 1/4"	1 1/8"	5/16"
3" DIA STD PIPE	1/2" DIA x 2 1/2" 10 FT-LB TORQUE	4 1/2"	7 1/2"	1"	2 1/2"	3/4"	6"	3/4"	1/4"
4" DIA STD PIPE		5 1/2"	8 1/2"	1"	3 1/2"	3/4"	7"	3/4"	1/4"
5" DIA STD PIPE	5/8" DIA x 3 1/2" 24 FT-LB TORQUE	6 1/2"	10 1/4"	1 1/4"	4"	7/8"	8 1/2"	1"	1/4"
6" DIA STD PIPE		7 1/2"	11 1/2"	1 1/4"	5"	7/8"	9 3/4"	1"	5/16"
8" DIA STD PIPE		9 1/2"	1'-2"	1 1/4"	7"	7/8"	1'-0 1/4"	1"	5/16"

NOTES:

1. REFER TO STD DWG SN 14A FOR GENERAL NOTES.
2. TIGHTEN BOLT ONLY TO THE TORQUE LIMITS SHOWN IN THE TABLE. DO NOT OVER TIGHTEN.

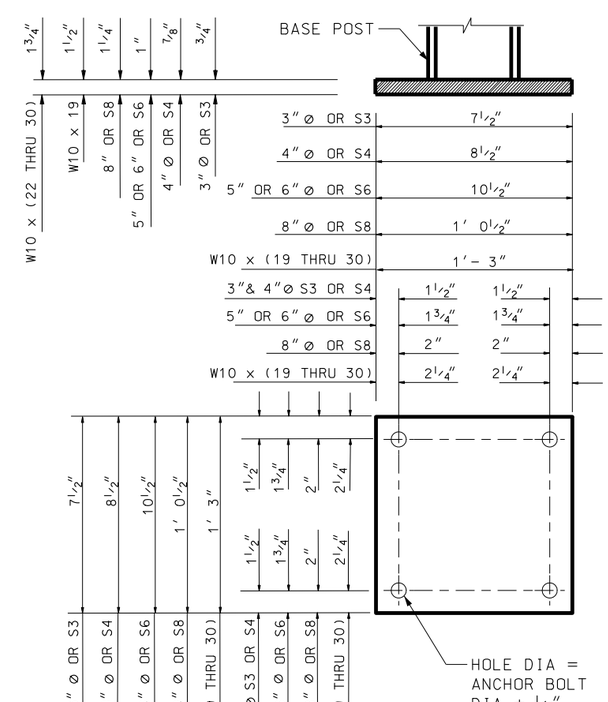

BASE POST BOTTOM PLATE DETAIL

NO.	DATE	APPR.	REMARKS

REVISIONS

UTAH DEPARTMENT OF TRANSPORTATION
STANDARD DRAWINGS FOR ROAD AND BRIDGE CONSTRUCTION
SALT LAKE CITY, UTAH

RECOMMENDED FOR APPROVAL — JAN.01,2008 DATE
CHAIRMAN STANDARDS COMMITTEE
APPROVED — JAN.01,2008 DATE
DEPUTY DIRECTOR

FREEWAY SIGN BASE AND POST REQUIREMENTS (B6A-B6B-B6C)

STANDARD DRAWING TITLE

STD DWG
SN 14B

DGN File:L:\Standard Drawings\Imperial\2008Approved\Signs (SN)\SN14B.dgn
18-DEC-2007