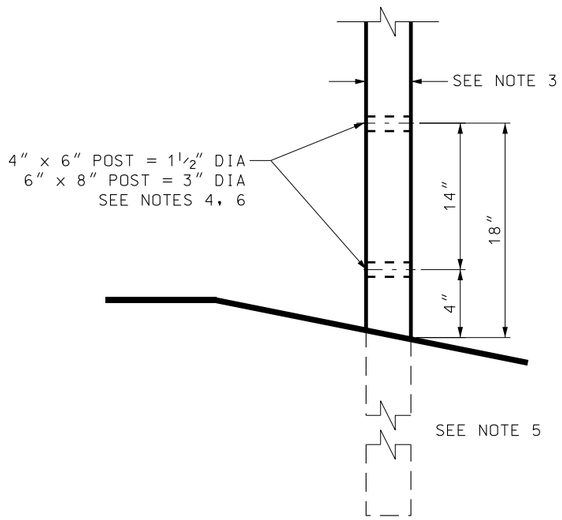

WEAKENED POST DETAIL

SEE NOTE 8

TIMBER SIGN POSTS (Nominal)

HORIZONTAL SIGN DIMENSION (inches)

VERTICAL SIGN DIMENSION (inches)	12	24	36	48	60	72	84	96	108	120	132	144
12	1 - 4x4 4	1 - 4x4 4	1 - 4x4 4	1 - 4x4 4	2 - 4x4 4	2 - 4x4 4	2 - 4x4 4	2 - 4x4 4	2 - 4x4 4	2 - 4x4 4	2 - 4x4 4	2 - 4x4 4
18	1 - 4x4 4	1 - 4x4 4	1 - 4x4 4	1- 4x6 4	2 - 4x4 4	2 - 4x4 4	2 - 4x4 4	2 - 4x6 4	2 - 4x6 4	2 - 4x6 4	2 - 4x6 4	2 - 4x6 4
24	1 - 4x4 4	1 - 4x4 4	1- 4x6 4	1- 4x6 4	2 - 4x4 4	2 - 4x6 4	2 - 4x6 4	2 - 4x6 4	2 - 4x6 4	2 - 4x6 4	2 - 4x6 4	2 - 4x6 4
30	1 - 4x4 4	1 - 4x4 4	1- 4x6 4	1- 4x6 4	2 - 4x6 4	2 - 4x6 4	2 - 4x6 4	2 - 4x6 4	2 - 4x6 4	2 - 4x6 4	3 - 4x6 4	3 - 4x6 4
36	1 - 4x4 4	1- 4x6 4	1- 4x6 4	1- 4x6 4	2 - 4x6 4	2 - 4x6 4	2 - 4x6 4	2 - 4x6 4	3 - 4x6 4	3 - 4x6 4	3 - 4x6 4	3 - 4x6 4
42	1 - 4x4 4	1- 4x6 4	1- 4x6 4	1- 4x6 4	2 - 4x6 4	2 - 4x6 4	2 - 4x6 4	3 - 4x6 4	3 - 4x6 4	3 - 4x6 4	2 - 6x8 5	2 - 6x8 5
48	1 - 4x4 4	1- 4x6 4	1- 4x6 4	2 - 4x6 4	2 - 4x6 4	2 - 4x6 4		3 - 4x6 4	3 - 4x6 4	2 - 6x8 4	2 - 6x8 5	2 - 6x8 5
54	1 - 4x4 4	1- 4x6 4	1- 6x8 5	2 - 4x6 4	2 - 4x6 4	1- 6x8 5		2 - 6x8 5	2 - 6x8 5	2 - 6x8 5	2 - 6x8 5	2 - 6x8 5
60	1- 4x6 4	1- 4x6 4	1- 6x8 5	2 - 4x6 4	1- 6x8 5	1- 6x8 5		2 - 6x8 5	2 - 6x8 5	2 - 6x8 5	2 - 6x8 5	2 - 6x8 5
66	1- 4x6 4	1- 4x6 4	1- 6x8 5	2 - 4x6 4	1- 6x8 5			2 - 6x8 5	2 - 6x8 5	2 - 6x8 5	2 - 6x8 5	
72	1- 4x6 4	1- 6x8 5	1- 6x8 5	1- 6x8 5	1- 6x8 5			2 - 6x8 5	2 - 6x8 5	2 - 6x8 5		

LEGEND 2 - 4x6 — NUMBER & SIZE (inch x inch) OF POSTS
5 — EMBEDMENT DEPTH IN FEET

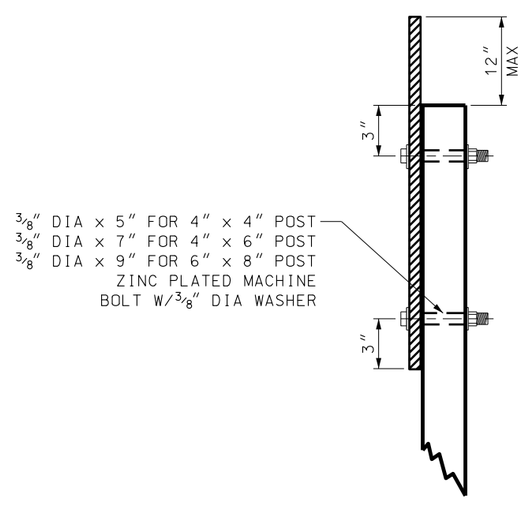

SIDE VIEW

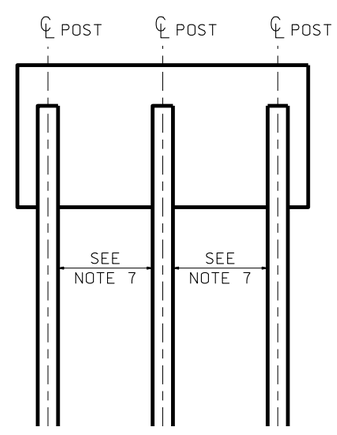

MULTIPLE POST SIGN

NOTES:

1. USE PERMITTED IN WORK ZONES.
   a. INSTALL AFTER NOTICE TO PROCEED IS GIVEN.
   b. REMOVE WHEN DIRECTED BY ENGINEER.
2. USE PERMITTED BY MAINTENANCE IN EMERGENCY SITUATIONS.
   a. USE FOR A MAXIMUM OF 90 DAYS.
3. NARROW POST DIMENSION TO FACE TRAFFIC.
4. USE ONE 4″x 6″ POST FOR MULTIPLE SIGN INSTALLATION ON SINGLE POST, EXCLUDING ROUTE MARKERS.
5. MINIMUM DEPTH OF EMBEDMENT: 4′ UNLESS 5′ IS SHOWN.
6. FIELD DRILL TWO HOLES IN THE CENTER OF THE POST. DRILL PERPENDICULAR TO THE CENTER LINE OF THE ROAD.
7. MINIMUM SPACING BETWEEN POST:

	POST SIZE	SPACING
FOR 3 OR MORE POSTS	4″ x 4″	= 4′
FOR 3 OR MORE POSTS	4″ x 6″	= 4′
FOR 2 OR MORE POSTS	6″ x 8″	= 7′

8. REFER TO STD DWG SN 7 SERIES FOR PLACEMENT OF GROUND MOUNTED SIGNS.
9. MEET STD SPEC SECTION 06055 TIMBER AND TIMBER TREATMENT.

REVISIONS

NO.	DATE	APPR.	REMARKS

UTAH DEPARTMENT OF TRANSPORTATION
STANDARD DRAWINGS FOR ROAD AND BRIDGE CONSTRUCTION
SALT LAKE CITY, UTAH

RECOMMENDED FOR APPROVAL — JAN.01,2008 DATE
CHAIRMAN STANDARDS COMMITTEE APPROVED — JAN.01,2008 DATE
DEPUTY DIRECTOR

TEMPORARY USE GROUND MOUNTED TIMBER SIGN POST

STANDARD DRAWING TITLE

STD DWG
SN 8A

DGN File:L:\Standard Drawings\Imperial\2008Approved\Signs (SN)\SN08A.dgn
18-DEC-2007