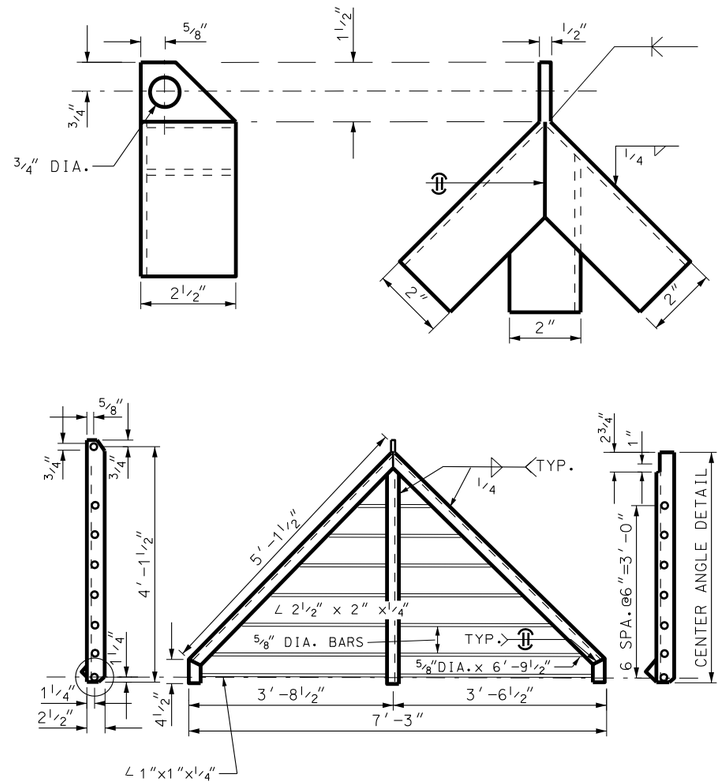

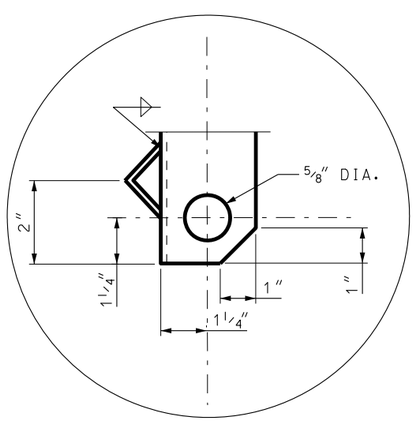

WELDED END GUARD UNIT
WT.W/BOLTS, U-CLAMP AND
PIPE POST 115 LBS
(2 REQUIRED)

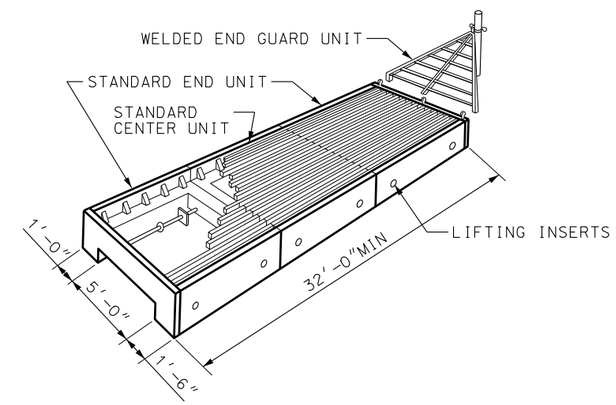

GENERAL NOTES:

1. USE COATED DEFORMED-CARBON REINFORCING STEEL BARS CONFORMING TO AASHTO M 284 OR M 111 AND M 31 GRADE 60.
2. USE STRUCTURAL STEEL CONFORMING TO AASHTO M 270 GRADE 36 AND GALVANIZE AFTER FABRICATION IN ACCORDANCE WITH AASHTO M 111 (ASTM A 123)
3. EXCAVATE SOIL 2'-0" AND BACKFILL WITH GRANULAR BACKFILL BORROW AND COMPACT.
4. ANY MODIFICATION REQUIRES APPROVAL BY THE ENGINEER.
5. USE CONCRETE CLASS AA(AE).

DESIGN DATA

HS-20 LOADING IN ACCORDANCE WITH AASHTO STANDARD SPECIFICATION
fc= 1400 psi
fs= 2,400 psi (REINFORCING STEEL)
fs= 20,000 psi (STRUCTURAL STEEL)
n=8

REVISIONS

NO.	DATE	APPR.	REMARKS

UTAH DEPARTMENT OF TRANSPORTATION
STANDARD DRAWINGS FOR ROAD AND BRIDGE CONSTRUCTION
SALT LAKE CITY, UTAH

RECOMMENDED FOR APPROVAL — JAN.01,2008 DATE
CHAIRMAN STANDARDS COMMITTEE
APPROVED — JAN.01,2008 DATE
DEPUTY DIRECTOR

WELDED END GUARD UNIT

STANDARD DRAWING TITLE

STD DWG
SW 1A

DGN File:L:\Standard.Drawings\Imperial\2008\Approved\Structures and Walls (SW)\SW01A.dgn
18-DEC-2007