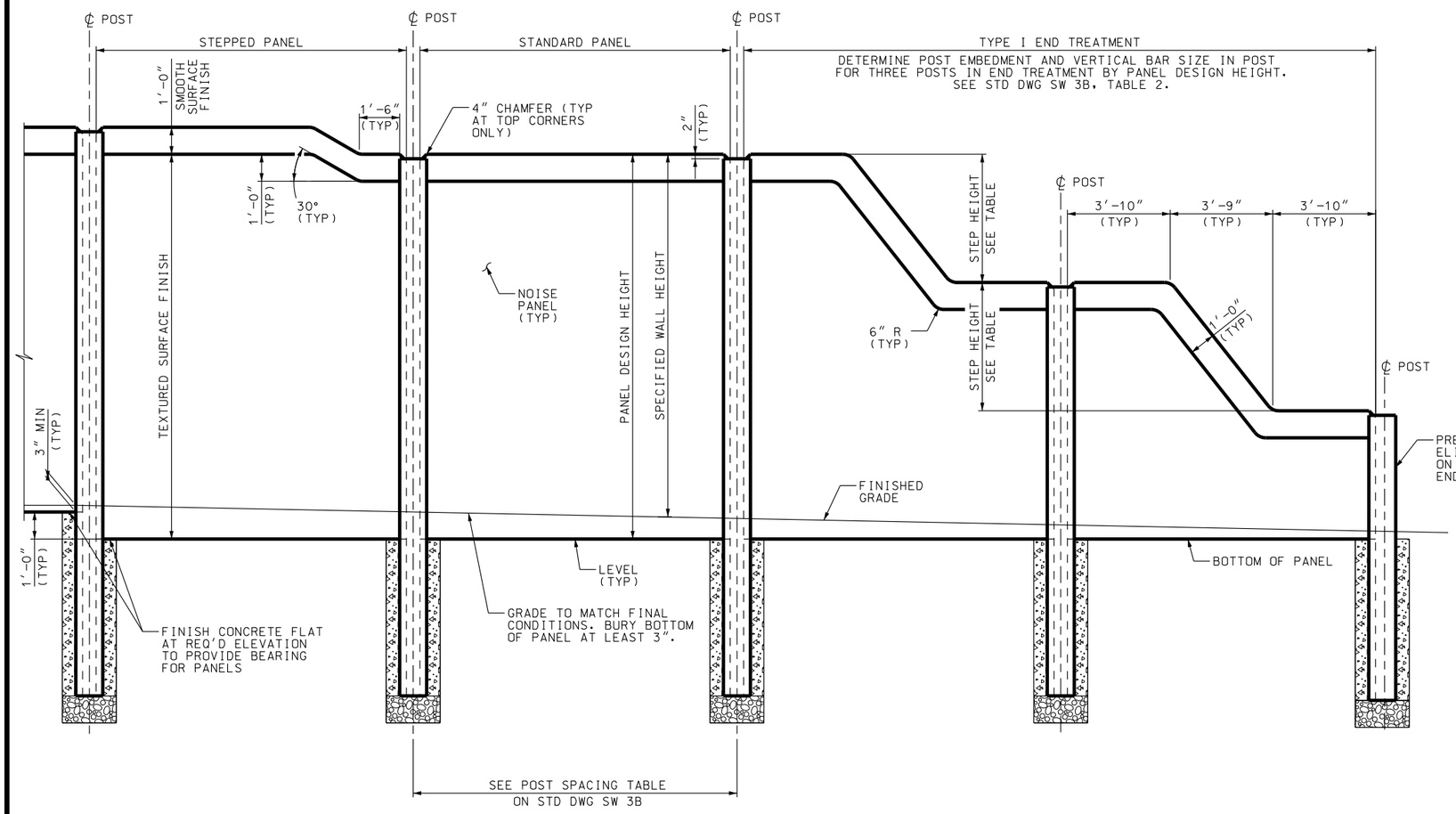

TYPICAL ELEVATION

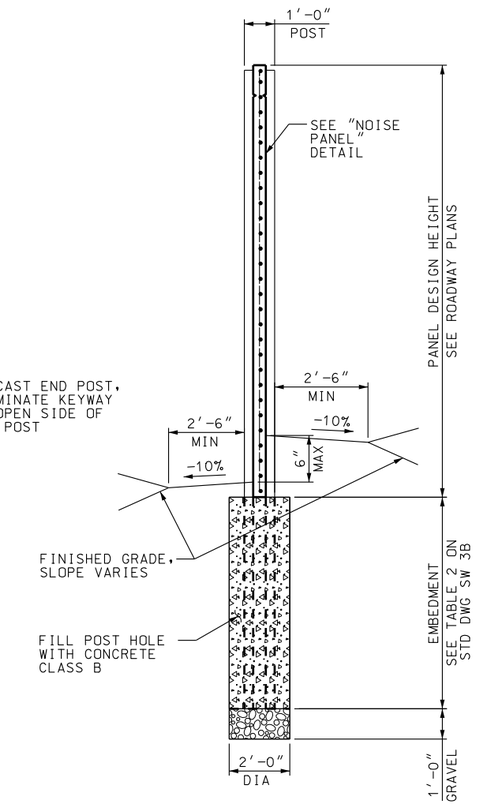

TYPICAL SECTION

DESIGN DATA

AASHTO GUIDE SPECIFICATIONS FOR STRUCTURAL DESIGN OF SOUND BARRIERS, 1989, WITH INTERIMS TO 2002.

AASHTO STANDARD SPECIFICATIONS FOR HIGHWAY BRIDGES, 2002.

PRECAST PANELS & POSTS: CONCRETE CLASS AA(AE) f′c= 5,000 psi;
Fs(REINF)=24,000 psi; n=8

POST HOLES: CONCRETE CLASS B f′c= 2,500 psi

NOTES:

1. CHAMFER EXPOSED CONCRETE CORNERS AS SHOWN.
2. SEE ROADWAY PLANS FOR LOCATION AND SPECIFIED HEIGHT OF PRECAST NOISE WALL.
3. ALL NOISE PANELS ARE:
   HEIGHT: 8′ MIN TO 17′ MAX (1′ INCREMENTS)
   LENGTH: 11′-5″ LONG
   THICKNESS: 7″
4. DETERMINE PANEL HEIGHTS AND LOCATIONS OF PANEL STEPS TO PROVIDE SPECIFIED MINIMUM WALL HEIGHT THROUGHOUT ENTIRE LENGTH OF WALL, EXCLUDING END TREATMENTS.
5. CHANGE ELEVATION AT TOP OF NOISE WALL WITH STEPPED PANEL AS SHOWN ON THIS SHEET.
6. BEGIN AND END NOISE WALL WITH END TREATMENT SPECIFIED ON THE PLANS. TYPE I END TREATMENT SHOWN ON THIS SHEET.
7. EVENLY SPACE PILASTER POSTS AT 200 FT MAXIMUM INTERVAL WHEN REQ'D. SEE STD DWG SW 5 FOR PRECAST PILASTER POST DETAILS. SEE ROADWAY PLANS FOR EXACT LOCATIONS.
8. FORM A TEXTURED SURFACE FINISH ON BOTH SIDES OF NOISE PANEL. SEE ROADWAY PLANS FOR PRESCRIBED TEXTURED SURFACE FINISHES.

TABLE 1

PANEL DESIGN HEIGHT	PANEL REINFORCING
6′ AND LESS	WWF 6x6 - W10xW10
7′	WWF 6x6 - W10xW10
8′	WWF 6x6 - W10xW10
9′	WWF 6x6 - W10xW10
10′	WWF 6x6 - W10xW10
11′	WWF 6x6 - W10xW10
12′	WWF 6x6 - W10xW10
13′	WWF 6x6 - W20xW20
14′	WWF 6x6 - W20xW20
15′	WWF 6x6 - W20xW20
16′	WWF 6x6 - W20xW20
17′	WWF 6x6 - W20xW20

TYPE I END TREATMENT DIMENSIONS

NOISE PANEL DESIGN HEIGHT	STEP HEIGHT	NUMBER OF STEPS
7′ AND LESS	NONE	NONE
8′	3′-0″	1
9′	4′-0″	1
10′	4′-0″	1
11′	5′-0″	1
12′	3′-6″	2
13′	4′-0″	2
14′	4′-6″	2
15′	4′-6″	2
16′	5′-0″	2
17′	5′-6″	2

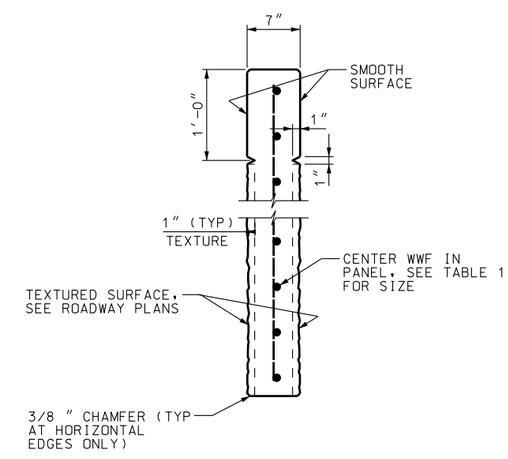

NOISE PANEL

NO.	DATE	APPR.	REMARKS

REVISIONS

UTAH DEPARTMENT OF TRANSPORTATION
STANDARD DRAWINGS FOR ROAD AND BRIDGE CONSTRUCTION
SALT LAKE CITY, UTAH

RECOMMENDED FOR APPROVAL — JAN.01,2008 DATE
CHAIRMAN STANDARDS COMMITTEE APPROVED — JAN.01,2008 DATE
DEPUTY DIRECTOR

PRECAST CONCRETE NOISE WALL 1 OF 2
STANDARD DRAWING TITLE

STD DWG
SW 3A

DGN Files:\Standard Drawings\Images\2008Images and Kalls (SW\SW03A.dgn
18-DEC-2007