POST SPACING

℄ POST TO ℄ POST	REQ'D SPACING
TYPE I TO TYPE I	12'-0"
TYPE I TO TYPE II	12'-2"
TYPE I TO TYPE III SIDE A	12'-0"
TYPE I TO TYPE III SIDE B	12'-4"
TYPE II TO TYPE II	12'-4"
TYPE II TO TYPE III SIDE A	12'-4"
TYPE II TO TYPE III SIDE B	12'-6"
TYPE III SIDE A TO TYPE III SIDE A	12'-0"
TYPE III SIDE A TO TYPE III SIDE B	12'-4"
TYPE III SIDE B TO TYPE III SIDE B	12'-8"

PILASTER POST IS TYPE I

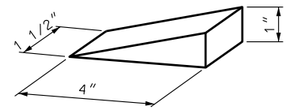

WOOD SHIM DETAIL

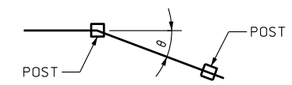

θ DETAIL

TABLE 2

PANEL DESIGN HEIGHT	POST	
	VERTICAL BAR SIZE	EMBEDMENT
6' OR LESS	#5	3'-0"
7'	#5	3'-6"
8'	#5	4'-0"
9'	#5	4'-6"
10'	#5	5'-0"
11'	#6	5'-6"
12'	#6	6'-0"
13'	#7	6'-6"
14'	#7	7'-0"
15'	#8	7'-6"
16'	#9	8'-0"
17'	#9	8'-6"

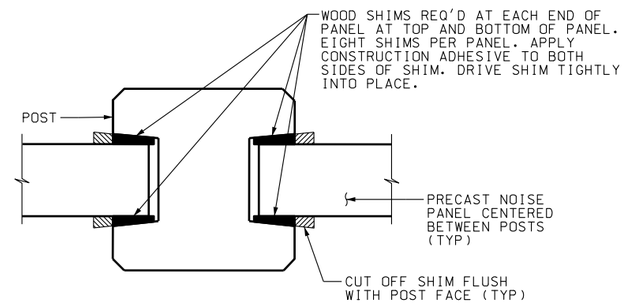

POST & NOISE PANEL DETAIL

TYPE I POST SHOWN
TYPE II AND III POSTS SIMILAR
PILASTER SIMILAR

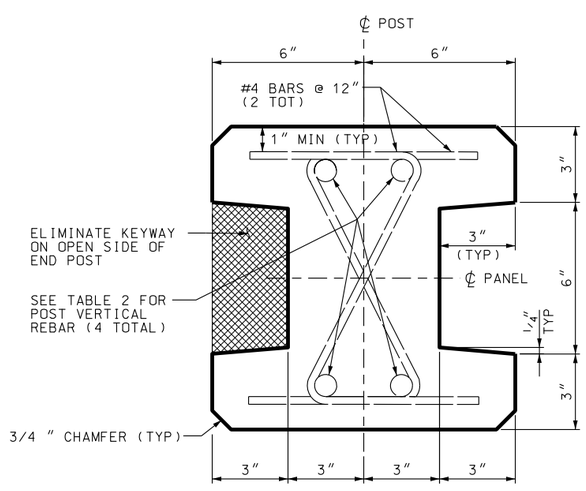

SECTION THRU TYPE I POST
θ = 0° TO 10°

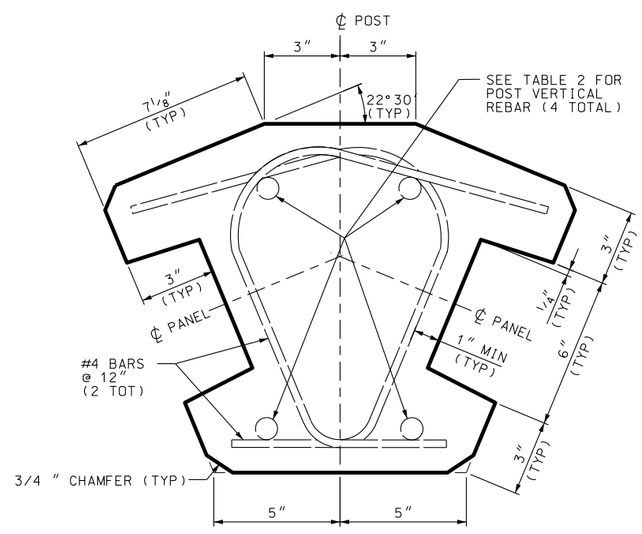

SECTION THRU TYPE II POST
θ = 35° TO 55°

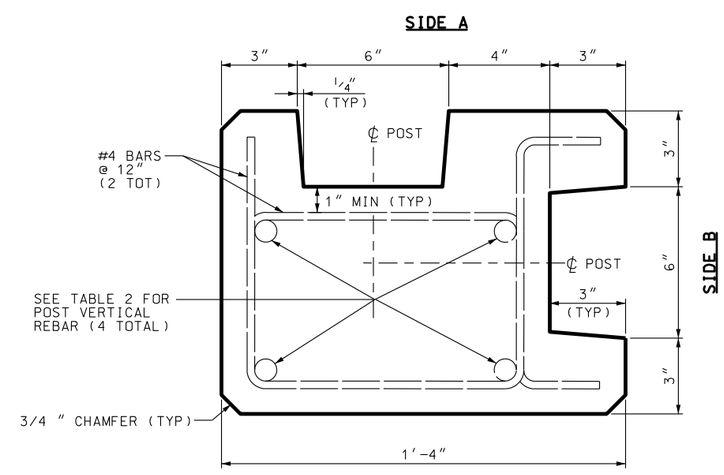

SECTION THRU TYPE III POST
θ = 80° TO 100°

REVISIONS

NO.	DATE	APPR.	REMARKS

UTAH DEPARTMENT OF TRANSPORTATION
STANDARD DRAWINGS FOR ROAD AND BRIDGE CONSTRUCTION
SALT LAKE CITY, UTAH

RECOMMENDED FOR APPROVAL — JAN.01,2008 DATE
CHAIRMAN STANDARDS COMMITTEE APPROVED — JAN.01,2008 DATE
DEPUTY DIRECTOR

PRECAST CONCRETE NOISE WALL 2 OF 2

STANDARD DRAWING TITLE

STD DWG
SW 3B

DGN File:L:\Standard Drawings\Imperial\2008\Approved\Structures and Walls (SW)\SW03B.dgn
18-DEC-2007