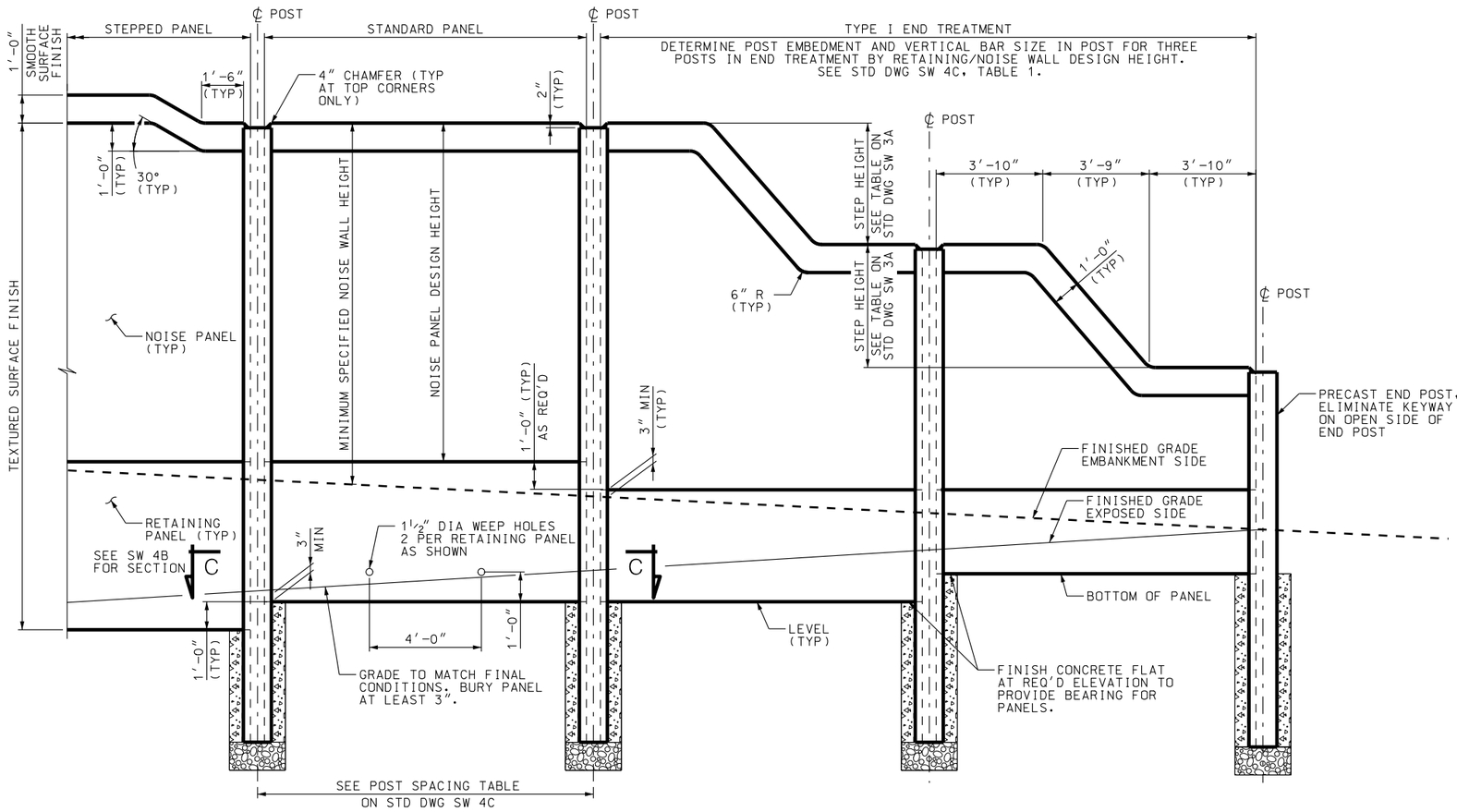

TYPICAL ELEVATION

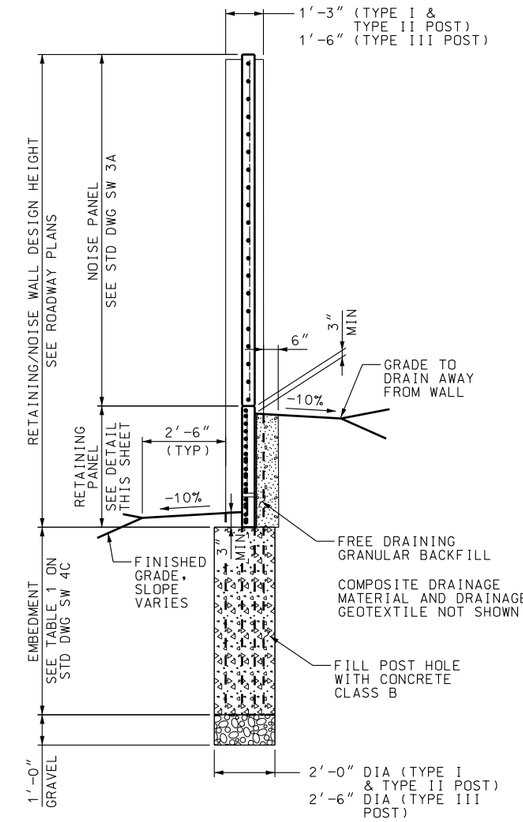

TYPICAL SECTION

DESIGN DATA

AASHTO GUIDE SPECIFICATIONS FOR STRUCTURAL DESIGN OF SOUND BARRIERS, 1989, WITH INTERIMS TO 2002.

AASHTO STANDARD SPECIFICATIONS FOR HIGHWAY BRIDGES, 2002.

PRECAST PANELS & POSTS: CONCRETE CLASS AA(AE) f'c= 5,000 psi;
Fs(REINF)=24,000 psi; n=8

POST HOLES: CONCRETE CLASS B f'c= 2,500 psi

NOTES:

1. CHAMFER EXPOSED CONCRETE CORNERS AS SHOWN.
2. SEE ROADWAY PLANS FOR LOCATION AND HEIGHT OF PRECAST RETAINING/NOISE WALL.
3. PROVIDE MINIMUM SPECIFIED NOISE WALL HEIGHT THROUGHOUT ENTIRE WALL LENGTH, EXCLUDING END TREATMENT.
4. ALL PANELS ARE:

	RETAINING PANEL	TRANSITION PANEL
HEIGHT:	7' MAX (1' INCREMENTS)	11' MAX (1' INCREMENTS)
LENGTH:	11'-5" LONG	11'-5" LONG
THICKNESS:	6"	7"

5. SEE STD DWG 4B FOR RETAINING PANEL DETAILS.
6. MAXIMUM HEIGHT OF RETAINING/NOISE WALL IS 19'-0".
7. SEE STD DWG 3A FOR NOISE PANEL DETAILS.
8. CHANGE ELEVATION AT TOP OF RETAINING/NOISE WALL WITH STEPPED NOISE PANEL SHOWN ON THIS SHEET.
9. BEGIN AND END RETAINING/NOISE WALL WITH END TREATMENT SPECIFIED ON THE PLANS. TYPE I END TREATMENT SHOWN ON THIS SHEET.
10. EVENLY SPACE PILASTER POSTS AT 200 FT MAXIMUM INTERVALS WHEN REQ'D. SEE STD DWG SW 5 FOR PRECAST PILASTER POST DETAILS. SEE ROADWAY PLANS FOR EXACT LOCATIONS.
11. FORM A TEXTURED SURFACE FINISH ON EXPOSED SIDE OF RETAINING PANEL. SEE ROADWAY PLANS FOR PRESCRIBED TEXTURED SURFACE FINISH.

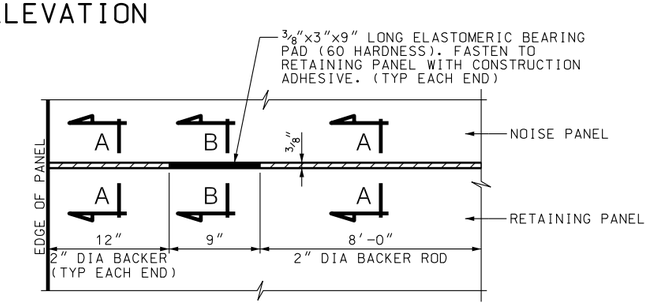

PANEL CONNECTION DETAIL

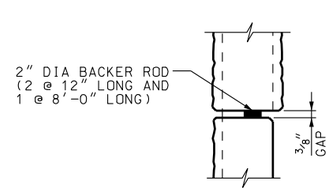

SECTION A-A

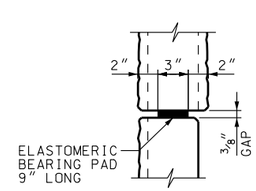

SECTION B-B

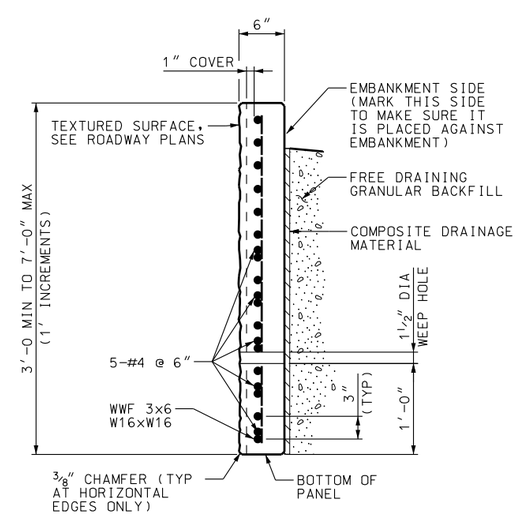

RETAINING PANEL

NO.	DATE	APPR.	REMARKS

REVISIONS

UTAH DEPARTMENT OF TRANSPORTATION
STANDARD DRAWINGS FOR ROAD AND BRIDGE CONSTRUCTION
SALT LAKE CITY, UTAH

RECOMMENDED FOR APPROVAL — JAN.01,2008 DATE
CHAIRMAN STANDARDS COMMITTEE APPROVED — JAN.01,2008 DATE
DEPUTY DIRECTOR

PRECAST CONCRETE RETAINING/NOISE WALL 1 OF 3

STANDARD DRAWING TITLE

STD DWG SW 4A

DGN: Eliot:\Standard Drawings\Interim\2008\Drawings\Structures and Walls (SW)\SW04A.dgn
18-DEC-2007