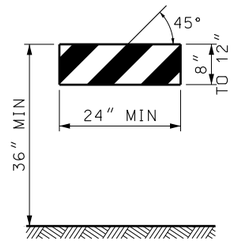

TYPE I BARRICADE

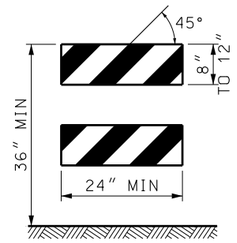

TYPE II BARRICADE

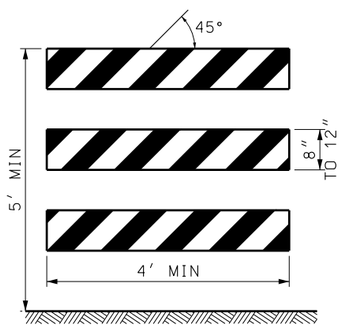

TYPE III BARRICADE

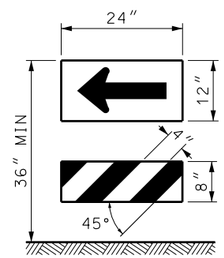

DIRECTION INDICATOR BARRICADE

BARRICADES

NOTES 1,2,6

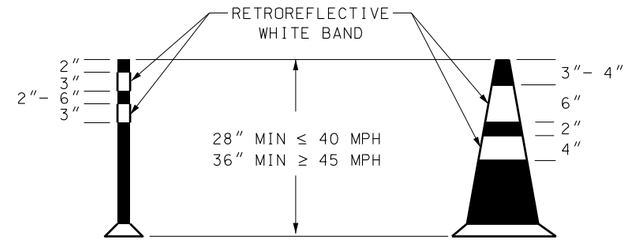

TUBULAR MARKERS

DAYLIGHT HOURS ONLY
SEE NOTE 5

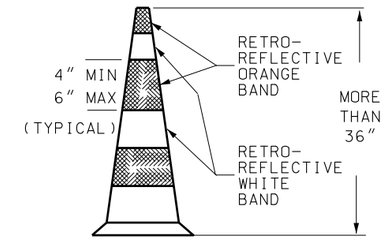

CONES

NOTES 5,7,8,9,10,11

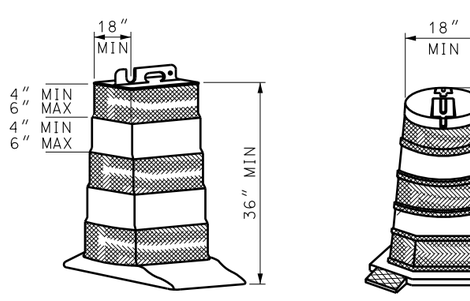

ONE-PIECE RECTANGULAR W/RETROREFLECTIVE BANDS

TWO-PIECE ROUND W/RETROREFLECTIVE BANDS

PLASTIC DRUMS

SEE NOTES 3,5,9

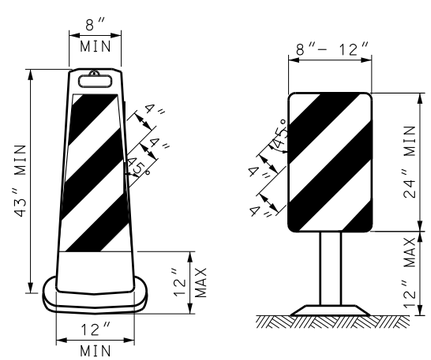

VERTICAL PANELS

SEE NOTE 1

NOTES:

1. USE A MINIMUM OF 270 SQUARE INCHES OF RETROREFLECTIVE MATERIAL PLACED A MINIMUM OF 12 INCHES ABOVE THE ROADWAY SURFACE ON BARRICADES AND VERTICAL PANELS WHEN USED ON FREEWAYS OR ROADWAYS WITH A POSTED SPEED GREATER THAN 45 MPH. PLACE BARRICADES AND VERTICAL PANELS IN SUCH A MANNER THAT THEY ARE VISIBLE TO APPROACHING TRAFFIC.

2. USE SANDBAGS WITH SAND OR OTHER COMPARABLE SOFT MATERIAL AS BALLAST. DO NOT PLACE BALLAST HIGHER THAN 12 INCHES ABOVE THE ROADWAY AND DO NOT COVER ANY REFLECTIVE AREA OF RAILS OR SIGNS.

3. USE PLASTIC DRUMS OR DIRECTIONAL BARRICADES AS LANE CLOSURE TAPER DEVICES FOR SPEEDS 50 MPH AND GREATER.

4 USE TUBULAR MARKERS FOR DAY-TIME USE ONLY.

5. WHEN DRUMS, CONES, OR TUBULAR MARKERS ARE USED TO CHANNELIZE PEDESTRIANS, LOCATE THEM SUCH THAT THERE ARE NO GAPS BETWEEN THE BASES OF THE DEVICES IN ORDER TO CREATE A CONTINUOUS BOTTOM, AND THE HEIGHT OF EACH INDIVIDUAL DRUM, CONE, OR TUBULAR MARKER IS NO LESS THAN 36 INCHES TO BE DETECTABLE TO USERS OF LONG CANES. WHEN BARRICADES ARE USED TO CHANNELIZE PEDESTRIANS, THE BOTTOM OF THE BOTTOM RAIL WILL BE NO HIGHER THAN 6 INCHES OFF THE GROUND IN ADDITION TO THE ABOVE REQUIREMENTS.

6. USE A DIRECTION INDICATOR BARRICADE WITH A ONE-DIRECTION LARGE ARROW (W1-6) SIGN MOUNTED ABOVE A DIAGONAL STRIPED, HORIZONTALLY ALIGNED, RETROREFLECTIVE RAIL.

7. USE REFLECTORIZED CONES DURING NIGHTTIME FOR MAXIMUM VISIBILITY.

8. PROVIDE RETROREFLECTORIZATION OF CONES THAT ARE 28 TO 36 INCHES IN HEIGHT BY USING A 6 INCH WIDE WHITE BAND LOCATED 3 TO 4 INCHES FROM THE TOP OF THE CONE AND AN ADDITIONAL 4 INCH WIDE WHITE BAND LOCATED APPROXIMATELY 2 INCHES BELOW THE 6 INCH BAND.

9. PROVIDE RETROREFLECTORIZATION OF CONES THAT ARE MORE THAN 36 INCHES IN HEIGHT BY USING HORIZONTAL, CIRCUMFERENTIAL, ALTERNATING ORANGE AND WHITE RETROREFLECTIVE STRIPES THAT ARE 4 TO 6 INCHES WIDE. USE A MINIMUM OF TWO ORANGE AND TWO WHITE STRIPES FOR EACH CONE, WITH THE TOP STRIPE BEING ORANGE. DO NOT EXCEED 3 INCHES IN WIDTH FOR ANY NON- RETROREFLECTIVE SPACES BETWEEN THE ORANGE AND WHITE STRIPES

10. DO NOT USE CONES DURING NIGHTTIME ON FREEWAYS, DIVIDED HIGHWAYS, OR ROADS WITH A SPEED OF 55 MPH OR GREATER. THIS RESTRICTION DOES NOT APPLY TO PAVEMENT MARKING OPERATIONS.

11. DO NOT USE CONES FOR LONG TERM STATIONARY OPERATIONS. CONES WILL BE REMOVED FROM THE ROADWAY AT THE END OF EACH WORKDAY, WITH THE FOLLOWING EXCEPTION:

    CONES MAY BE USED FOR UP TO 3 DAYS/2 NIGHTS FOR OPERATIONS WHERE WORKERS ARE CONTINUALLY PRESENT AND WORK IS ACTIVELY UNDERWAY. CONES WILL BE REPLACED WITH VERTICAL PANELS, DRUMS, AND/OR BARRICADES WHEN WORKERS ARE NO LONGER PRESENT, OR WHEN WORK EXTENDS THROUGH ADDITIONAL NIGHTS.

REVISIONS

NO.	DATE	APPR.	REMARKS

UTAH DEPARTMENT OF TRANSPORTATION
STANDARD DRAWINGS FOR ROAD AND BRIDGE CONSTRUCTION
SALT LAKE CITY, UTAH

RECOMMENDED FOR APPROVAL — JAN.01,2008 DATE
CHAIRMAN STANDARDS COMMITTEE APPROVED — JAN.01,2008 DATE
DEPUTY DIRECTOR

WORK ZONE CHANNELIZATION DEVICES

STANDARD DRAWING TITLE

STD DWG
TC 2A

DGN File:L:\Standard_Drawings\Imperial\2008Approved\Traffic Control (TC)\TC02A.dgn
18-DEC-2007