STRAIGHT
METAL DELINEATOR

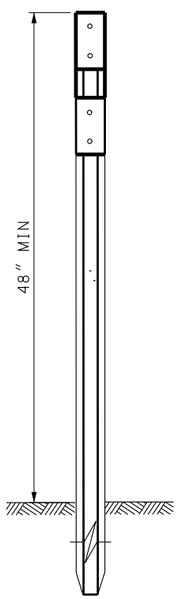

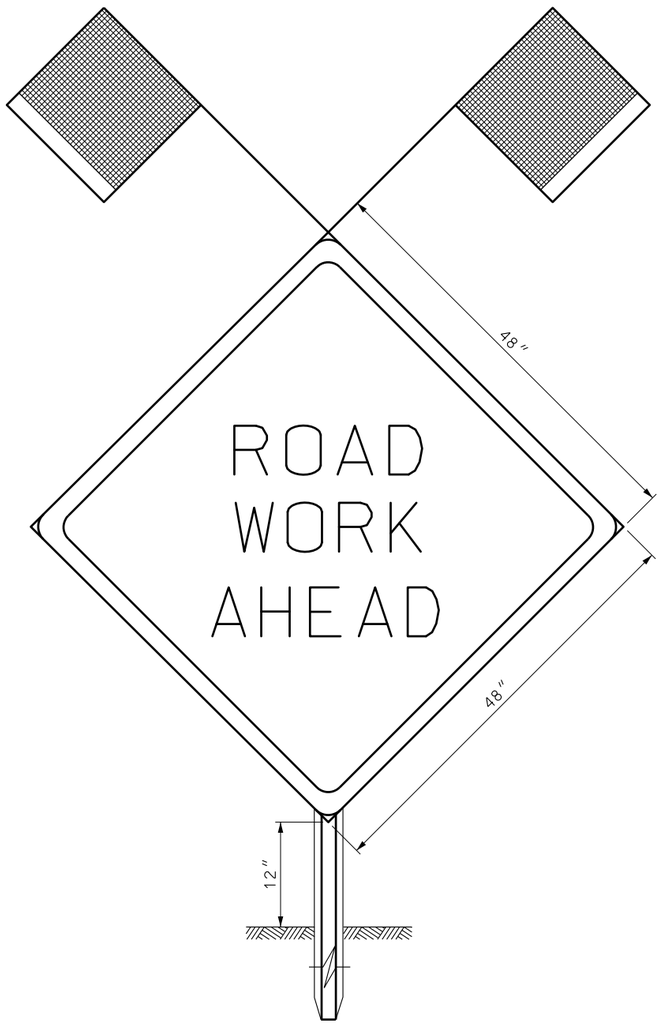

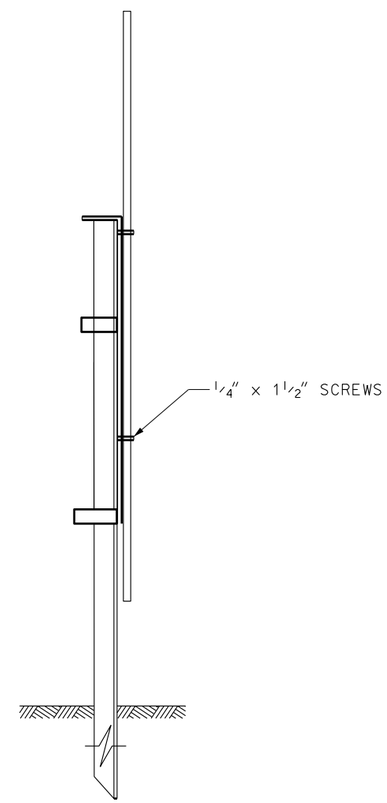

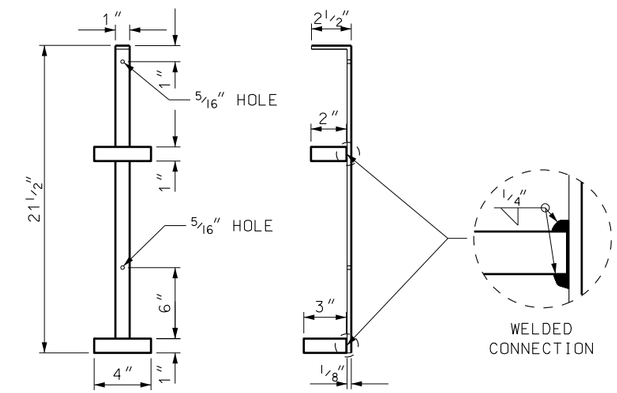

MOUNTED SIGN
BRACKET

NOTES:

1. USE WITH FABRIC OR FLEXIBLE SIGN SUBSTRATE ONLY. DO NOT USE ALUMINUM, PLYWOOD, OR COMPOSITE SUBSTRATE.
2. USE DURING DAYLIGHT PERIOD ONLY.
3. REMOVE BRACKET AND SIGN PRIOR TO NIGHTTIME.
4. USE ON METAL DELINEATOR POST ONLY.
5. USE ASTM A 36 STEEL FOR BRACKET. WELD SQUARE LOOPS ONTO VERTICAL METAL PIECE. PAINT OR GALVANIZE SIGN BRACKET AFTER WELDING IS COMPLETED.
6. USE SCREWS TO ATTACH TRAFFIC CONTROL SIGN TO BRACKET THROUGH THE TWO 5/16" HOLES.

REVISIONS

NO.	DATE	APPR.	REMARKS

UTAH DEPARTMENT OF TRANSPORTATION
STANDARD DRAWINGS FOR ROAD AND BRIDGE CONSTRUCTION
SALT LAKE CITY, UTAH

RECOMMENDED FOR APPROVAL — JAN.01,2008 DATE
CHAIRMAN STANDARDS COMMITTEE APPROVED — JAN.01,2008 DATE
DEPUTY DIRECTOR

DELINEATOR MOUNTED
WORK ZONE
SIGN BRACKET
STANDARD DRAWING TITLE

STD DWG
TC 2D

DGN File:L:\Standard Drawings\Imperial\2008Approved\Traffic Control (TC)\TC02D.dgn
18-DEC-2007