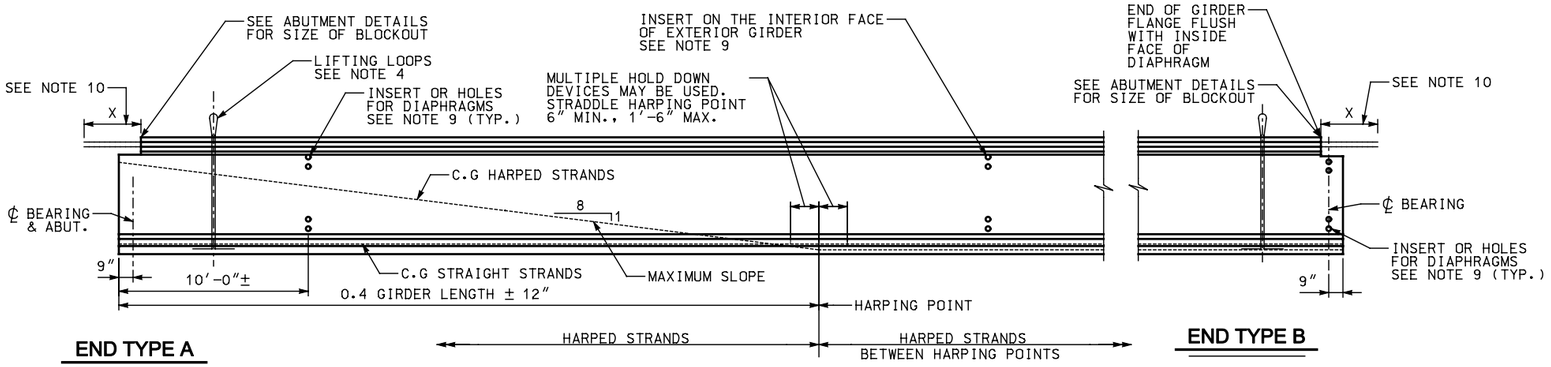

1 GIRDER ELEVATION

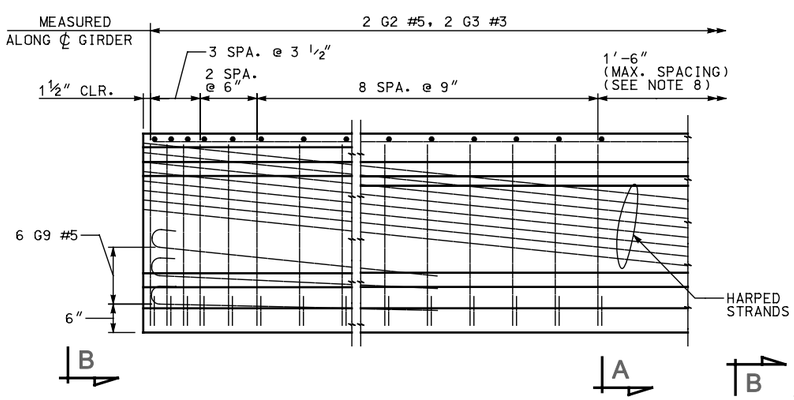

TYPICAL END ELEVATION

END TYPE A SHOWN. TYPE B SIMILAR

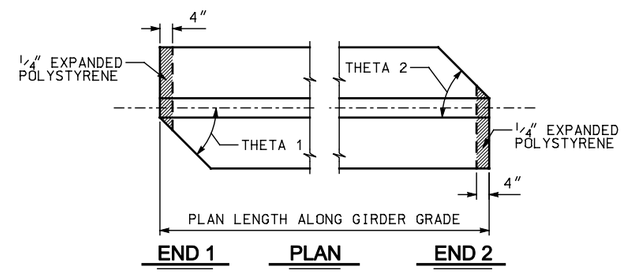

3 SKEWED END DETAILS

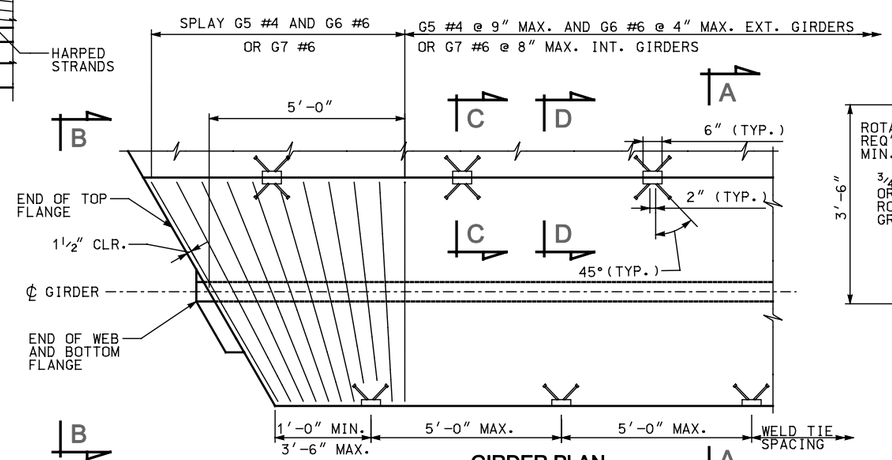

GIRDER PLAN

OMIT WELD TIES ON EXTERIOR EDGE OF EXTERIOR GIRDER. (STRANDS AND LONGITUDINAL BARS NOT SHOWN)

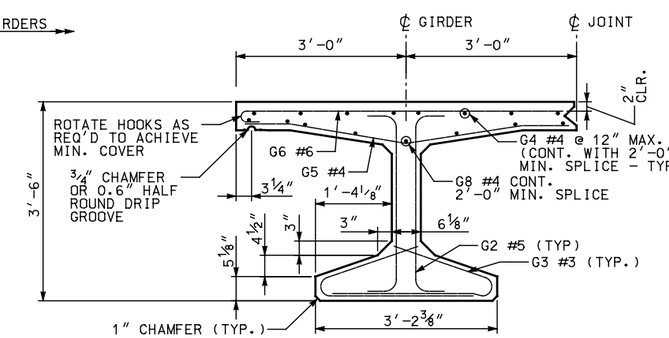

SECTION A

NOTE: TOP FLANGE DESIGNED FOR 42" SINGLE SLOPE CONCRETE PARAPET. PARAPET REINFORCING NOT SHOWN.

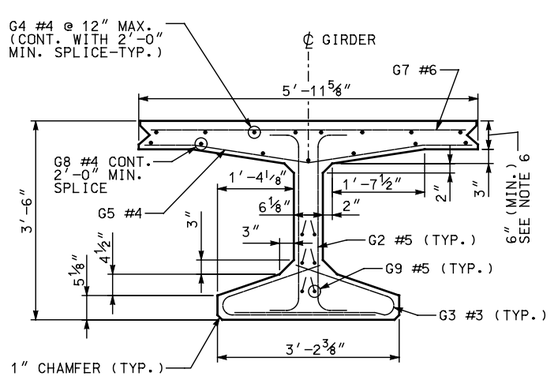

VIEW B

DIAPHRAGM TYPE	END TYPE	X
INTEGRAL ABUTMENT	A	–
CANTILEVER ABUTMENT	B	0"

MARK	LOCATION	SIZE	BENDING DIAGRAM (ALL DIMENSIONS ARE OUT TO OUT)
G2	GIRDER STIRRUPS	5	
G3*	BOTTOM FLANGE TIES	3	
G4*	TOP OF TOP FLANGE - LONGIT.	4	STR.
G5*	BOT. OF TOP FLANGE - TRANSV.	4	STR.
G6*	TOP TRANSV. - EXT. GIRDER	6	
G7*	TOP TRANSV. - INT. GIRDER	6	STR.
G8*	BOT. OF TOP FLANGE - LONGIT.	4	STR.
G9	GIRDER LONGITUDINAL	5	STR.

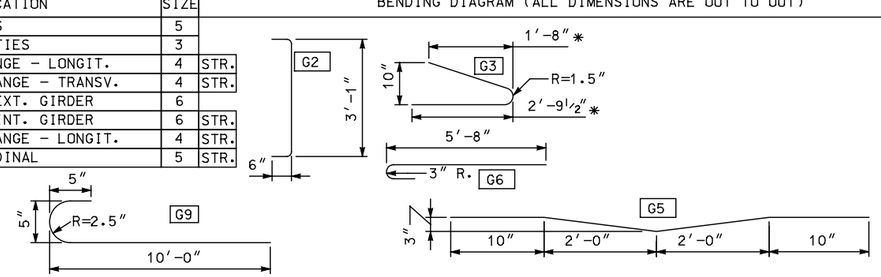

* = VARIES FOR SKEWED ENDS

NOTES

1. INCREASE PLAN LENGTH AS NECESSARY TO COMPENSATE FOR SHORTENING DUE TO PRESTRESS AND SHRINKAGE.
2. ALL PRETENSIONED AND TEMPORARY STRANDS TO BE [0.6" DIA.] LOW RELAXATION STRANDS (AASHTO M203 GRADE 270.)
3. FOR GIRDER ENDS REQUIRING BAR OR STRAND EXTENSION SEE SUPLEMENTAL DETAILS. FOR END TYPE 'B', CUT ALL STRANDS BELOW CONCRETE SURFACE AND GROUT WITH AN APPROVED EPOXY GROUT.
4. CONTRACTOR TO DESIGN AND INSTALL LIFTING EMBEDMENTS IN ACCORDANCE WITH THE STANDARD SPECIFICATIONS.
5. CAUTION TO BE EXERCISED IN HANDLING AND PLACING GIRDERS. ALL GIRDERS TO BE CHECKED BY THE CONTRACTOR TO ENSURE THAT THEY ARE BRACED ADEQUATELY TO PREVENT TIPPING AND TO CONTROL LATERAL BENDING DURING SHIPPING. ONCE ERECTED, ALL GIRDERS TO BE BRACED LATERALLY TO PREVENT TIPPING UNTIL THE DIAPHRAGMS HAVE BEEN INSTALLED.
6. THICKEN FLANGE TO COMPENSATE FOR CAMBER. SEE "GIRDER FLANGE THICKENING" DETAIL.
7. FOR DIAPHRAGM NOTES SEE SHEET BT-4.
8. DESIGN GIRDER STIRRUP SPACING IN THIS REGION.
9. SEE FRAMING PLAN FOR DIAPHRAGM LOCATIONS AND SEE DIAPHRAGM DETAILS FOR CONNECTION REQUIREMENTS.
10. FIELD BENDING MAY BE REQUIRED TO OBTAIN 1 1/2" CONCRETE COVER IN CLOSURE POUR.

NO.	DATE	BY	REMARKS

REVISIONS

UTAH DEPARTMENT OF TRANSPORTATION
SALT LAKE CITY, UTAH
STRUCTURES DIVISION

DESIGN — CHECK
DRAWN — CHECK
QUANT. — CHECK

APPROVAL RECOMM. — DATE — SENIOR DESIGN ENGR.
APPROVED FOR USE BY UDOT — DATE — UDOT BRIDGE ENGR.

TYPICAL DETAIL SHEET
PRETENSIONED DECK BULB TEE
UDBT42 GIRDER DETAILS 1

PROJECT NUMBER

COUNTY

UDBT42 - 1
DRG. NO.

SHT. OF

UDBT42G1.dgn
7/8/2009

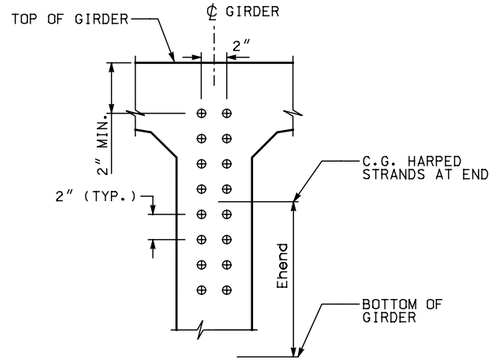

5 STRAND PATTERN AT GIRDER END

⊕ DENOTES HARPED STRAND

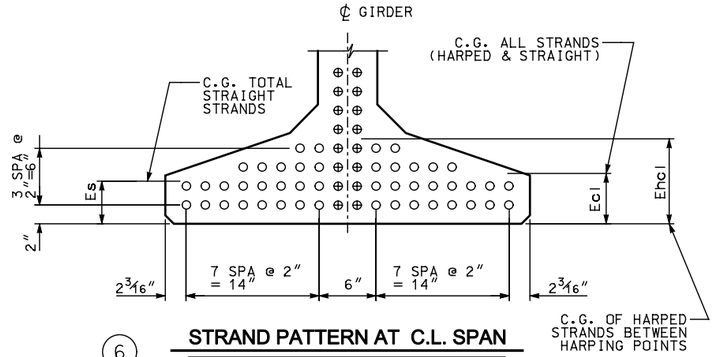

6 STRAND PATTERN AT C.L. SPAN

⊕ DENOTES HARPED STRAND

○ DENOTES STRAIGHT STRAND

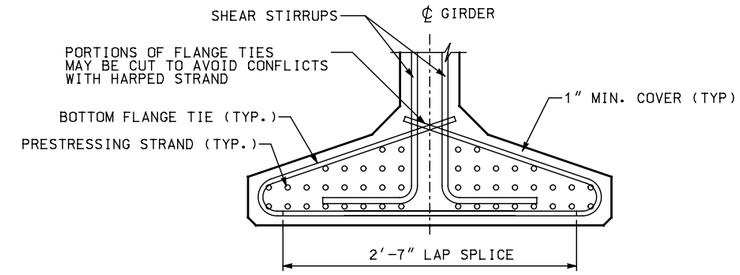

11 BOTTOM FLANGE REINFORCING

GIRDER END SHOWN, MIDDLE SECTION SIMILAR

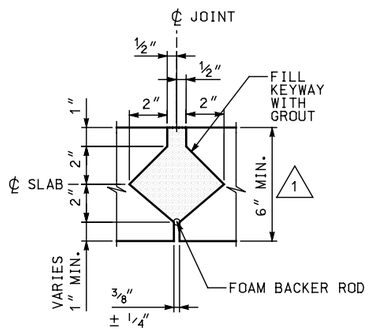

SECTION D

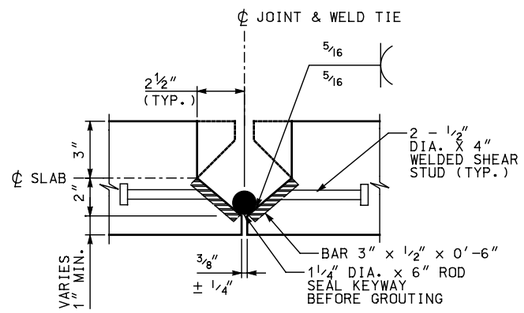

SECTION C

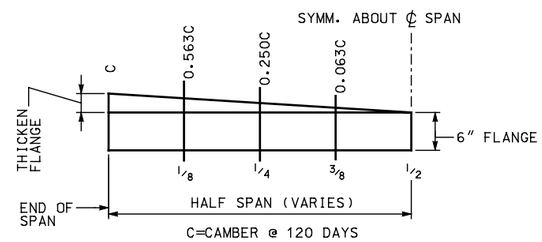

GIRDER FLANGE THICKENING **

** THICKEN FLANGE TO COMPENSATE FOR CAMBER DUE TO PRESTRESS. GIRDERS WITH FINAL CAMBER VALUES SMALLER THAN 3/4″ ARE EXEMPT FROM THIS REQUIREMENT. FLANGE THICKENING SHALL BE USED ONLY IF NEEDED BY DESIGN.

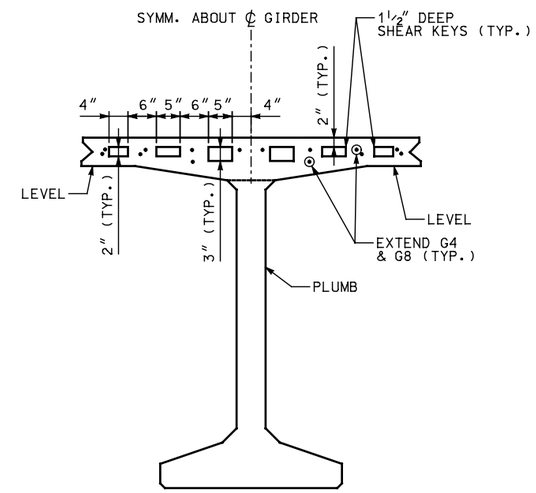

GIRDER END

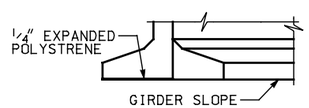

ELEVATION

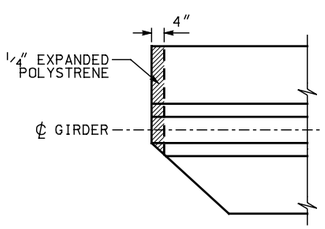

PLAN

10 BOTTOM FLANGE SPALL PROTECTION DETAIL

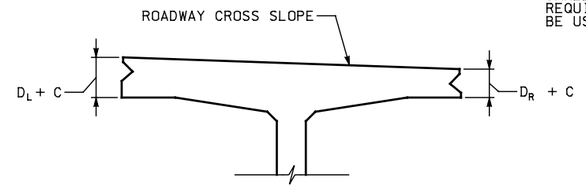

12 CROSS SLOPE DETAIL 1

NOTE: ADJUST D_L AND D_R TO PROVIDE ROADWAY CROSS SLOPE (6″ MIN.)

GIRDER SCHEDULE

SPAN	GIRDER	THETA 1 DEG. (3)	THETA 2 DEG. (3)	PLAN LENGTH (ALONG GIRDER GRADE)	MIN. CONC. COMPR. STRENGTH		HARPED*		STRAIGHT		LOCATION OF C.G. STRANDS				CAMBER = C			TOP FLANGE CROSS SLOPE	
					F'CI KSI	F'C KSI	NO. OF STRANDS	JACKING FORCE (KIPS)	NO. OF STRANDS	JACKING FORCE (KIPS)	Ecl (6)	Es (6)	Ehcl (6)	Ehend (5)	RELEASE △	30 △	120 △	D_L (12)	D_R (12)
-	-	-	-		-	-	-	-	-	-	-	-	-	-	-	-	-	-	-
-	-	-	-		-	-	-	-	-	-	-	-	-	-	-	-	-	-	-
-	-	-	-		-	-	-	-	-	-	-	-	-	-	-	-	-	-	-
-	-	-	-		-	-	-	-	-	-	-	-	-	-	-	-	-	-	-

1

* THE NUMBER OF HARPED STRANDS SHOULD NOT EXCEED 1/2 OF THE NUMBER OF STRAIGHT STRANDS.

NOTE:
DIMENSIONS SHALL BE SHOWN IN US CUSTOMARY UNITS TO THE NEAREST 1/8 INCH.

NO.	DATE	BY	REMARKS
1	05/18/09	MPC	MODIFIED CALLOUTS FOR TOP FLANGE THICKNESS. ADDED DL AND DR VALUES TO SCHEDULE

REVISIONS

UTAH DEPARTMENT OF TRANSPORTATION
SALT LAKE CITY, UTAH
STRUCTURES DIVISION

DESIGN — CHECK
DRAWN — CHECK
QUANT. — CHECK
SENIOR DESIGN ENGR. — APPROVAL RECOMM. — DATE
UDOT BRIDGE ENGR. — APPROVED FOR USE BY UDOT — DATE

TYPICAL DETAIL SHEET
PRETENSIONED DECK BULB TEE
UDBT42 GIRDER DETAILS 2

PROJECT NUMBER

COUNTY
UDBT42-2
DRG. NO.
SHT. OF

UDBT42G2.dgn
7/8/2009

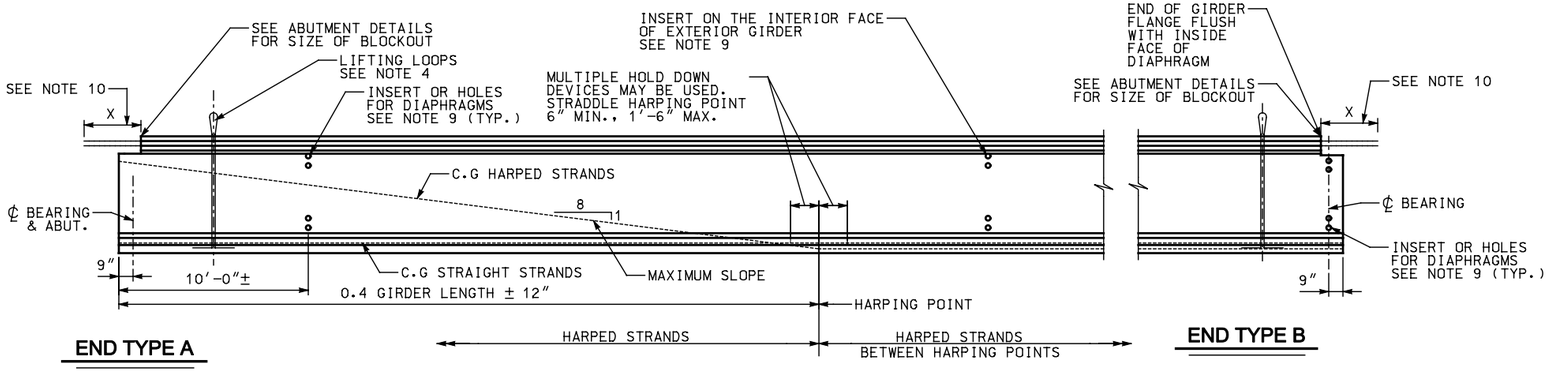

1 GIRDER ELEVATION

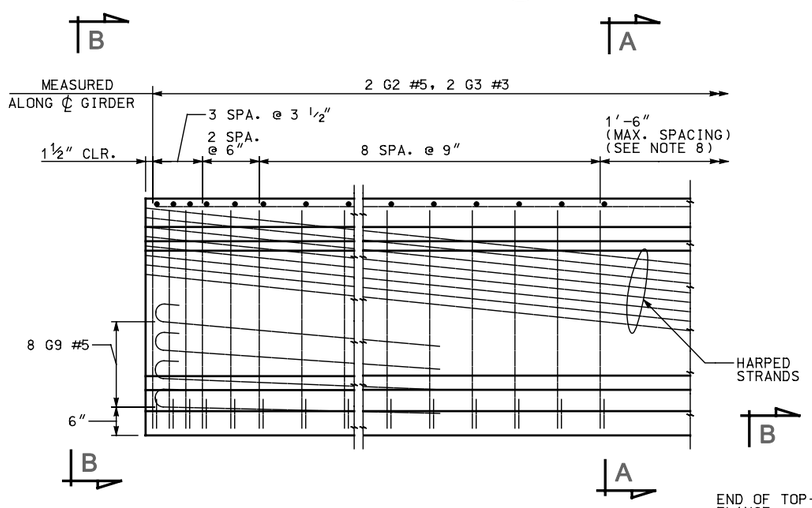

TYPICAL END ELEVATION

END TYPE A SHOWN, TYPE B SIMILAR

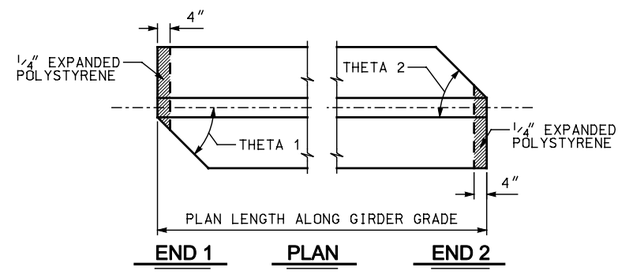

3 SKEWED END DETAILS

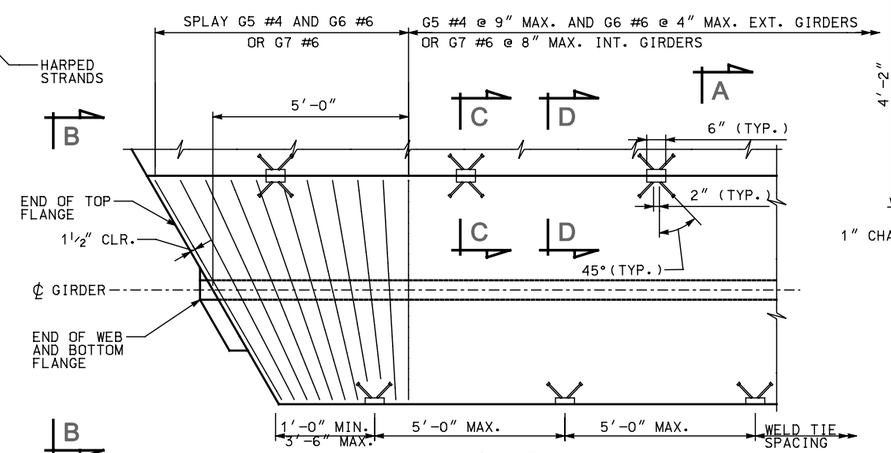

GIRDER PLAN

OMIT WELD TIES ON EXTERIOR EDGE OF EXTERIOR GIRDER. (STRANDS AND LONGITUDINAL BARS NOT SHOWN

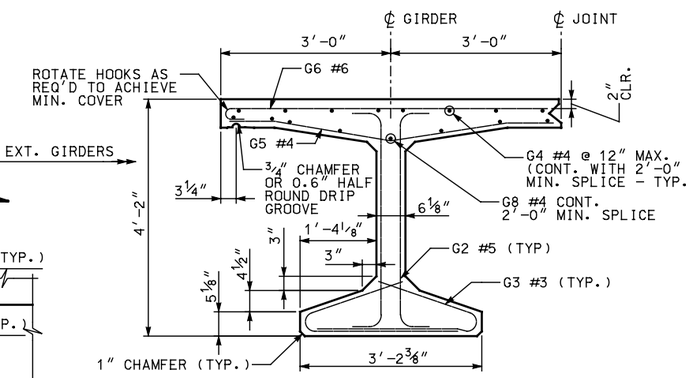

SECTION A

NOTE: TOP FLANGE DESIGNED FOR 42" SINGLE SLOPE CONCRETE PARAPET. PARAPET REINFORCING NOT SHOWN.

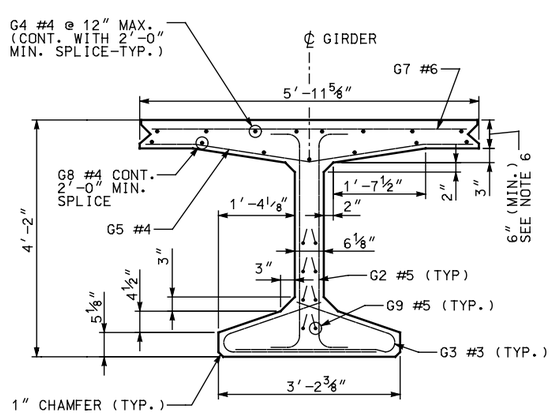

VIEW B

DIAPHRAGM TYPE	END TYPE	X
INTEGRAL ABUTMENT	A	
CANTILEVER ABUTMENT	B	0"

MARK	LOCATION	SIZE	
G2	GIRDER STIRRUPS	5	
G3*	BOTTOM FLANGE TIES	3	
G4*	TOP OF TOP FLANGE - LONGIT.	4	STR.
G5*	BOT. OF TOP FLANGE - TRANSV.	4	STR.
G6*	TOP TRANSV. - EXT. GIRDER	6	
G7*	TOP TRANSV. - INT. GIRDER	6	STR.
G8*	BOT. OF TOP FLANGE - LONGIT.	4	STR.
G9	GIRDER LONGITUDINAL	5	STR.

BENDING DIAGRAM (ALL DIMENSIONS ARE OUT TO OUT)

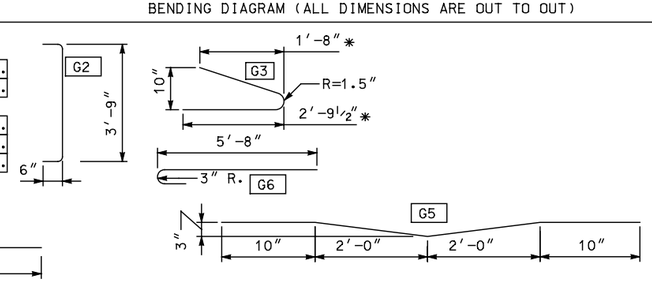

* = VARIES FOR SKEWED ENDS

NOTES

1. INCREASE PLAN LENGTH AS NECESSARY TO COMPENSATE FOR SHORTENING DUE TO PRESTRESS AND SHRINKAGE.
2. ALL PRETENSIONED AND TEMPORARY STRANDS TO BE [0.6" DIA.] LOW RELAXATION STRANDS (AASHTO M203 GRADE 270.)
3. FOR GIRDER ENDS REQUIRING BAR OR STRAND EXTENSION SEE SUPLEMENTAL DETAILS. FOR END TYPE 'B', CUT ALL STRANDS BELOW CONCRETE SURFACE AND GROUT WITH AN APPROVED EPOXY GROUT.
4. CONTRACTOR TO DESIGN AND INSTALL LIFTING EMBEDMENTS IN ACCORDANCE WITH THE STANDARD SPECIFICATIONS.
5. CAUTION TO BE EXERCISED IN HANDLING AND PLACING GIRDERS. ALL GIRDERS TO BE CHECKED BY THE CONTRACTOR TO ENSURE THAT THEY ARE BRACED ADEQUATELY TO PREVENT TIPPING AND TO CONTROL LATERAL BENDING DURING SHIPPING. ONCE ERECTED, ALL GIRDERS TO BE BRACED LATERALLY TO PREVENT TIPPING UNTIL THE DIAPHRAGMS HAVE BEEN INSTALLED.
6. THICKEN FLANGE TO COMPENSATE FOR CAMBER. SEE "GIRDER FLANGE THICKENING" DETAIL.
7. FOR DIAPHRAGM NOTES SEE SHEET BT-4.
8. DESIGN GIRDER STIRRUP SPACING IN THIS REGION.
9. SEE FRAMING PLAN FOR DIAPHRAGM LOCATIONS AND SEE DIAPHRAGM DETAILS FOR CONNECTION REQUIREMENTS.
10. FIELD BENDING MAY BE REQUIRED TO OBTAIN 1 1/2" CONCRETE COVER IN CLOSURE POUR.

NO.	DATE	BY	REMARKS

REVISIONS

UTAH DEPARTMENT OF TRANSPORTATION
SALT LAKE CITY, UTAH
STRUCTURES DIVISION

DESIGN CHECK | DRAWN CHECK | QUANT. CHECK

APPROVAL RECOMM. DATE SENIOR DESIGN ENGR.
APPROVED FOR USE BY UDOT DATE UDOT BRIDGE ENGR.

TYPICAL DETAIL SHEET
PRETENSIONED DECK BULB TEE
UDBT50 GIRDER DETAILS 1

PROJECT NUMBER

COUNTY

UDBT50 - 1
DRG. NO.

SHT. OF

UDBT50G1.dgn

7/8/2009

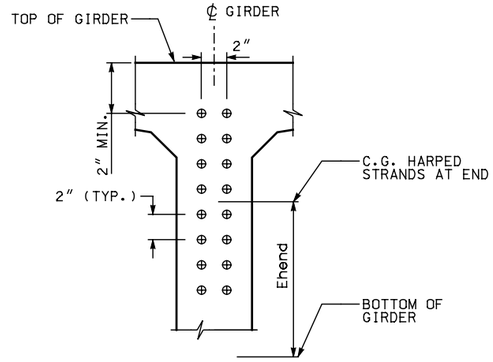

5 **STRAND PATTERN AT GIRDER END**

⊕ DENOTES HARPED STRAND

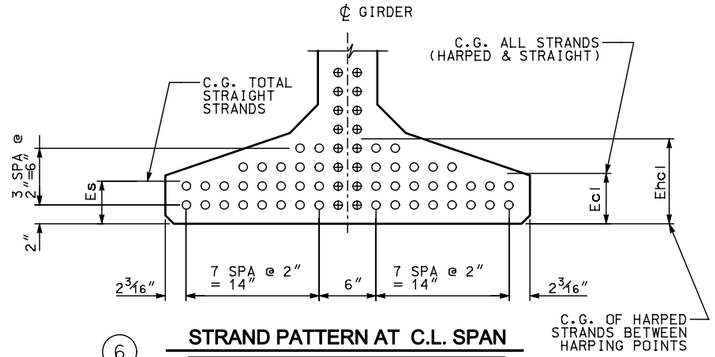

6 **STRAND PATTERN AT C.L. SPAN**

⊕ DENOTES HARPED STRAND

○ DENOTES STRAIGHT STRAND

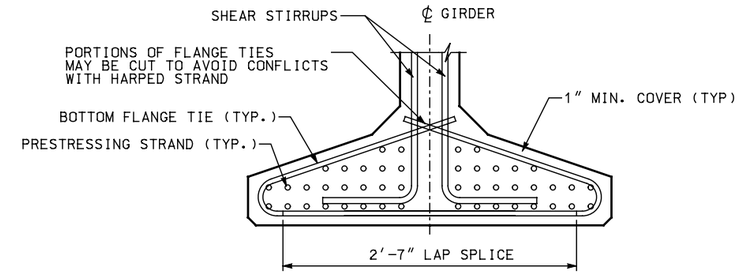

11 **BOTTOM FLANGE REINFORCING**

GIRDER END SHOWN, MIDDLE SECTION SIMILAR

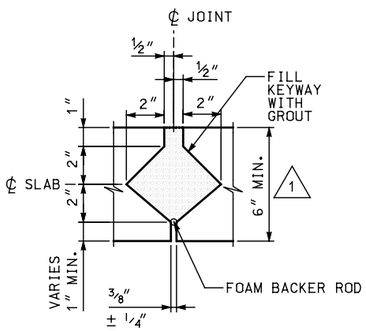

SECTION D

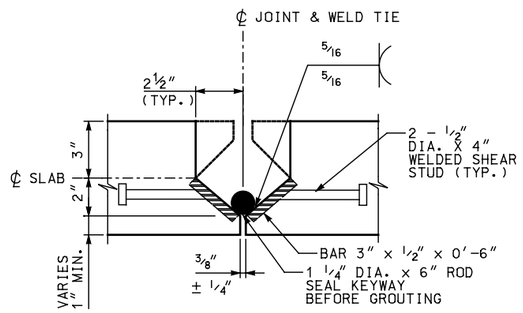

SECTION C

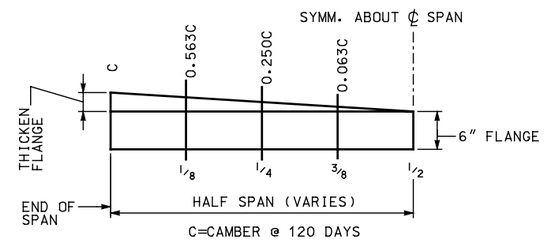

GIRDER FLANGE THICKENING **

** THICKEN FLANGE TO COMPENSATE FOR CAMBER DUE TO PRESTRESS. GIRDERS WITH FINAL CAMBER VALUES SMALLER THAN 3/4″ ARE EXEMPT FROM THIS REQUIREMENT. FLANGE THICKENING SHALL BE USED ONLY IF NEEDED BY DESIGN.

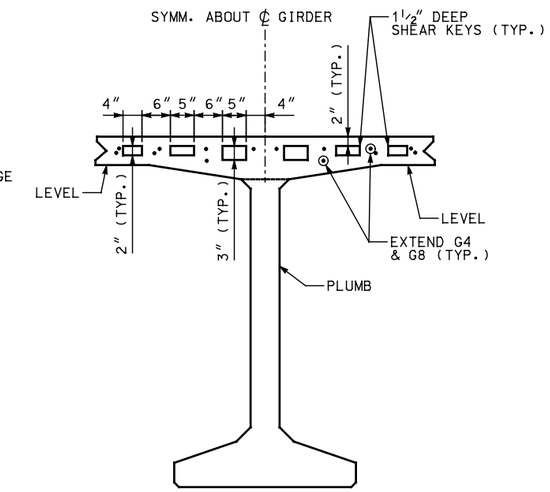

GIRDER END

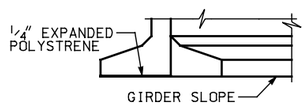

ELEVATION

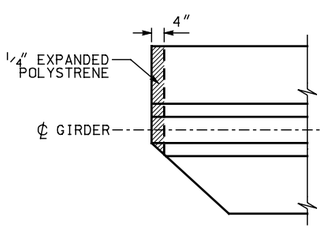

PLAN

10 **BOTTOM FLANGE SPALL PROTECTION DETAIL**

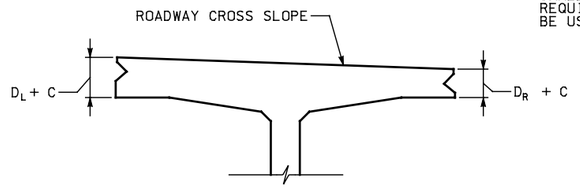

12 **CROSS SLOPE DETAIL** 1

NOTE: ADJUST D_L AND D_R TO PROVIDE ROADWAY CROSS SLOPE (6″ MIN.)

GIRDER SCHEDULE

SPAN	GIRDER	THETA 1 DEG. (3)	THETA 2 DEG. (3)	PLAN LENGTH (ALONG GIRDER GRADE)	MIN. CONC. COMPR. STRENGTH		HARPED*		STRAIGHT		LOCATION OF C.G. STRANDS				CAMBER = C			TOP FLANGE CROSS SLOPE	
					F'CI KSI	F'C KSI	NO. OF STRANDS	JACKING FORCE (KIPS)	NO. OF STRANDS	JACKING FORCE (KIPS)	Ecl (6)	Es (6)	Ehcl (6)	Ehend (5)	RELEASE △	30 △	120 △	D_L (12)	D_R (12)
-	-	-	-		-	-	-	-	-	-	-	-	-	-	-	-	-	-	-
-	-	-	-		-	-	-	-	-	-	-	-	-	-	-	-	-	-	-
-	-	-	-		-	-	-	-	-	-	-	-	-	-	-	-	-	-	-
-	-	-	-		-	-	-	-	-	-	-	-	-	-	-	-	-	-	-

1

* THE NUMBER OF HARPED STRANDS SHOULD NOT EXCEED 1/2 OF THE NUMBER OF STRAIGHT STRANDS.

NOTE:
DIMENSIONS SHALL BE SHOWN IN US CUSTOMARY UNITS TO THE NEAREST 1/8 INCH.

NO.	DATE	BY	REMARKS
1	08/18/09	MPC	MODIFIED CALLOUTS FOR TOP FLANGE THICKNESS. ADDED DL AND DR VALUES TO SCHEDULE

REVISIONS

UTAH DEPARTMENT OF TRANSPORTATION
SALT LAKE CITY, UTAH
STRUCTURES DIVISION

CHECK ___ CHECK ___ CHECK ___
DESIGN ___ DRAWN ___ QUANT. ___
APPROVAL RECOMM. ___ DATE ___ SENIOR DESIGN ENGR. ___
APPROVED FOR USE BY UDOT ___ DATE ___ UDOT BRIDGE ENGR. ___

TYPICAL DETAIL SHEET
PRETENSIONED DECK BULB TEE
UDBT50 GIRDER DETAILS 2

PROJECT NUMBER

COUNTY
UDBT50-2
DRG. NO.
SHT. OF

UDBT50G2.dgn
7/8/2009

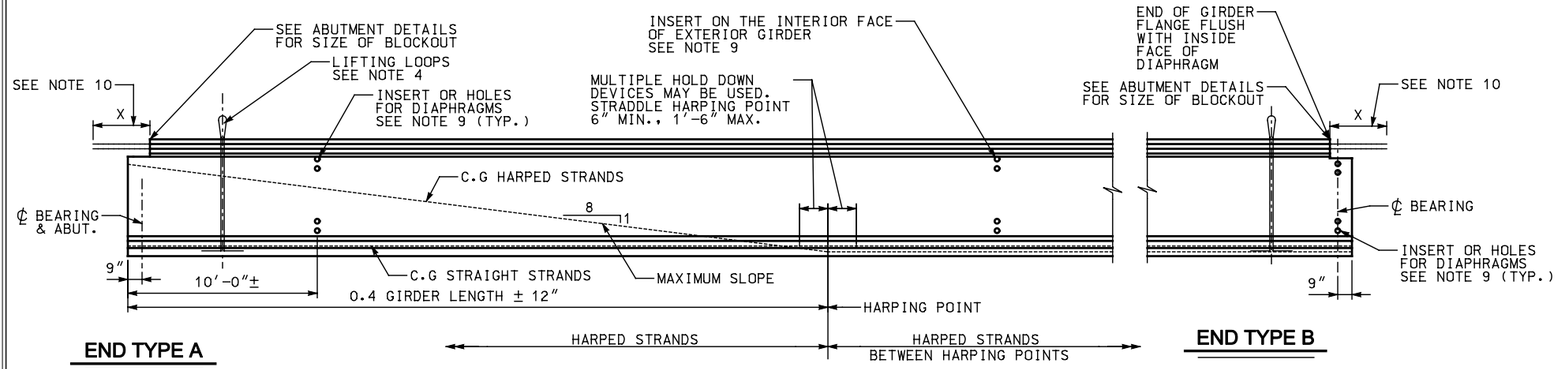

1 GIRDER ELEVATION

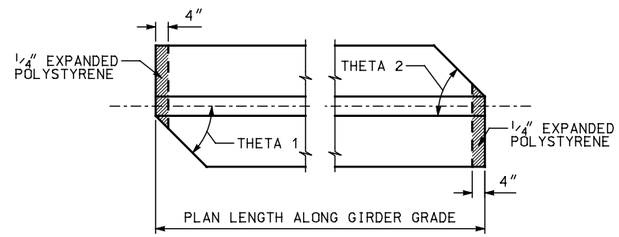

3 SKEWED END DETAILS

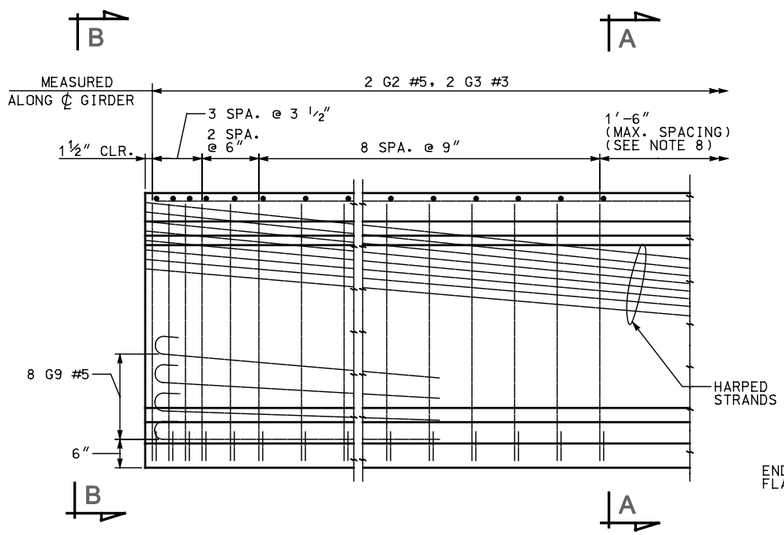

TYPICAL END ELEVATION

END TYPE A SHOWN. TYPE B SIMILAR

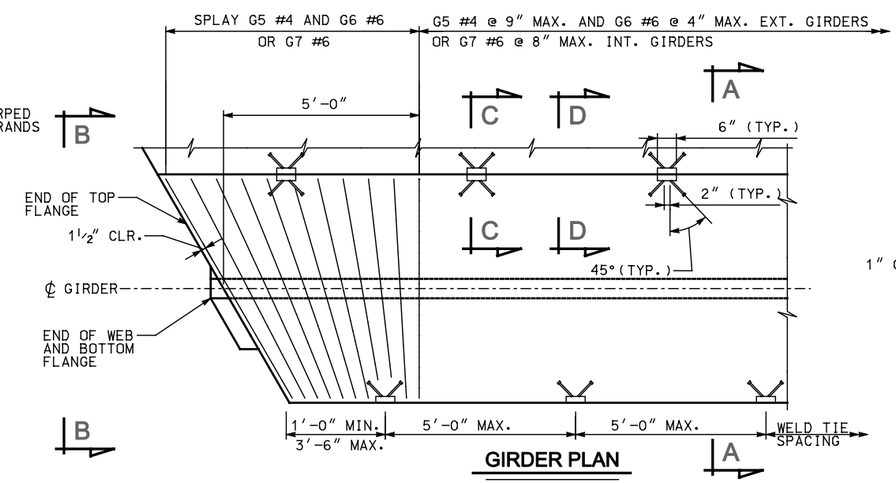

GIRDER PLAN

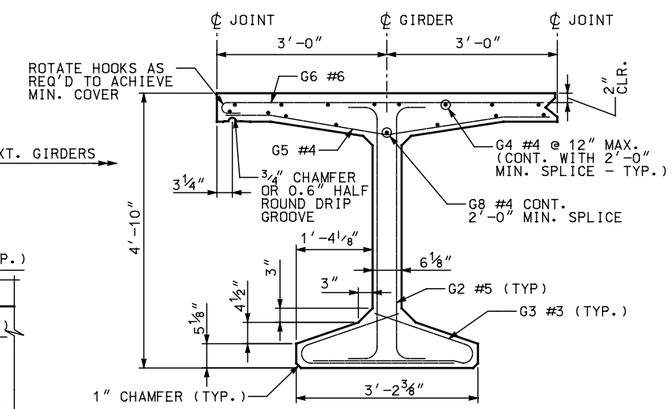

SECTION A

NOTE: TOP FLANGE DESIGNED FOR 42" SINGLE SLOPE CONCRETE PARAPET. PARAPET REINFORCING NOT SHOWN.

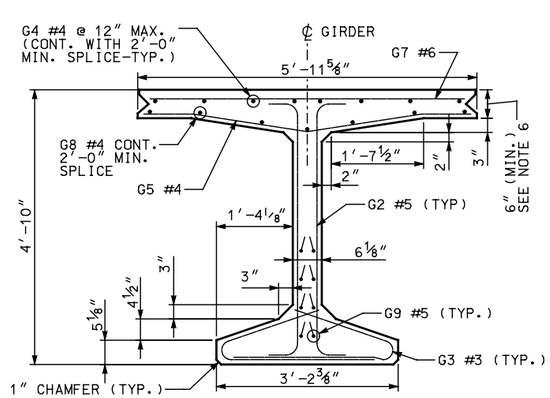

VIEW B

OMIT WELD TIES ON EXTERIOR EDGE OF EXTERIOR GIRDER. (STRANDS AND LONGITUDINAL BARS NOT SHOWN)

MARK	LOCATION	SIZE	
G2	GIRDER STIRRUPS	5	
G3*	BOTTOM FLANGE TIES	3	
G4*	TOP OF TOP FLANGE - LONGIT.	4	STR.
G5*	BOT. OF TOP FLANGE - TRANSV.	4	STR.
G6*	TOP TRANSV. - EXT. GIRDER	6	
G7*	TOP TRANSV. - INT. GIRDER	6	STR.
G8*	BOT. OF TOP FLANGE - LONGIT.	4	STR.
G9	GIRDER LONGITUDINAL	5	STR.

BENDING DIAGRAM (ALL DIMENSIONS ARE OUT TO OUT)

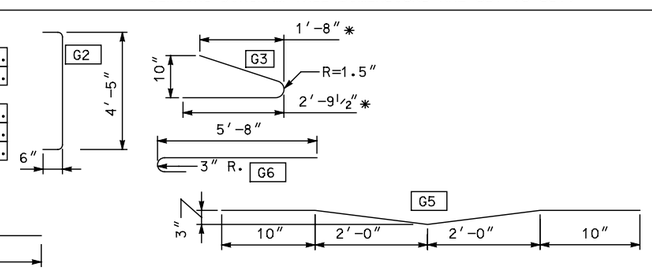

* = VARIES FOR SKEWED ENDS

DIAPHRAGM TYPE	END TYPE	X
INTEGRAL ABUTMENT	A	
CANTILEVER ABUTMENT	B	0"

NOTES

1. INCREASE PLAN LENGTH AS NECESSARY TO COMPENSATE FOR SHORTENING DUE TO PRESTRESS AND SHRINKAGE.
2. ALL PRETENSIONED AND TEMPORARY STRANDS TO BE [0.6" DIA.] LOW RELAXATION STRANDS (AASHTO M203 GRADE 270.)
3. FOR GIRDER ENDS REQUIRING BAR OR STRAND EXTENSION SEE SUPLEMENTAL DETAILS. FOR END TYPE 'B', CUT ALL STRANDS BELOW CONCRETE SURFACE AND GROUT WITH AN APPROVED EPOXY GROUT.
4. CONTRACTOR TO DESIGN AND INSTALL LIFTING EMBEDMENTS IN ACCORDANCE WITH THE STANDARD SPECIFICATIONS.
5. CAUTION TO BE EXERCISED IN HANDLING AND PLACING GIRDERS. ALL GIRDERS TO BE CHECKED BY THE CONTRACTOR TO ENSURE THAT THEY ARE BRACED ADEQUATELY TO PREVENT TIPPING AND TO CONTROL LATERAL BENDING DURING SHIPPING. ONCE ERECTED, ALL GIRDERS TO BE BRACED LATERALLY TO PREVENT TIPPING UNTIL THE DIAPHRAGMS HAVE BEEN INSTALLED.
6. THICKEN FLANGE TO COMPENSATE FOR CAMBER. SEE "GIRDER FLANGE THICKENING" DETAIL.
7. FOR DIAPHRAGM NOTES SEE SHEET BT-4.
8. DESIGN GIRDER STIRRUP SPACING IN THIS REGION.
9. SEE FRAMING PLAN FOR DIAPHRAGM LOCATIONS AND SEE DIAPHRAGM DETAILS FOR CONNECTION REQUIREMENTS.
10. FIELD BENDING MAY BE REQUIRED TO OBTAIN 1 1/2" CONCRETE COVER IN CLOSURE POUR.

NO.	DATE	BY	REMARKS

REVISIONS

UTAH DEPARTMENT OF TRANSPORTATION
SALT LAKE CITY, UTAH
STRUCTURES DIVISION

DESIGN CHECK
DRAWN CHECK
QUANT. CHECK
APPROVAL RECOMM. DATE SENIOR DESIGN ENGR.
APPROVED FOR USE BY UDOT DATE UDOT BRIDGE ENGR.

TYPICAL DETAIL SHEET
PRETENSIONED DECK BULB TEE
UDBT58 GIRDER DETAILS 1

PROJECT NUMBER

COUNTY
UDBT58 - 1
DRG. NO.
SHT. OF

UDBT5931.dgn
7/8/2009

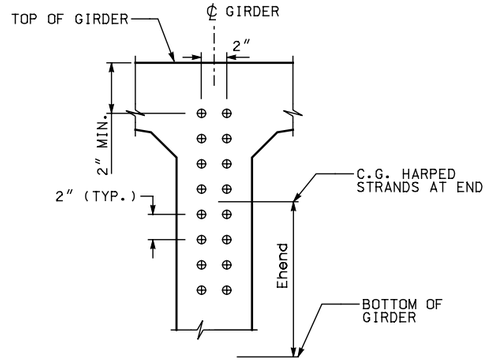

5 **STRAND PATTERN AT GIRDER END**

⊕ DENOTES HARPED STRAND

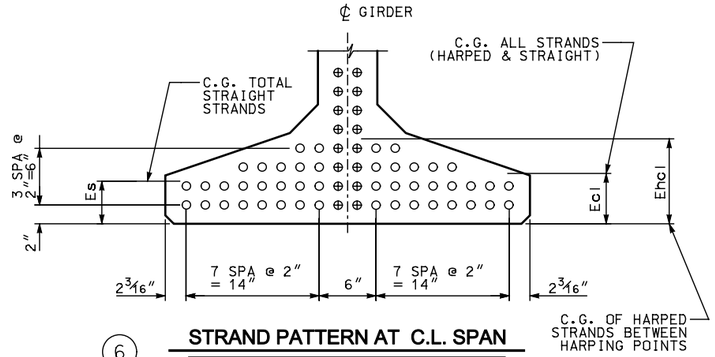

6 **STRAND PATTERN AT C.L. SPAN**

⊕ DENOTES HARPED STRAND

○ DENOTES STRAIGHT STRAND

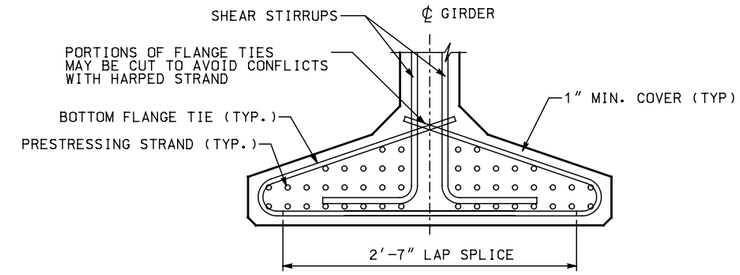

11 **BOTTOM FLANGE REINFORCING**

GIRDER END SHOWN, MIDDLE SECTION SIMILAR

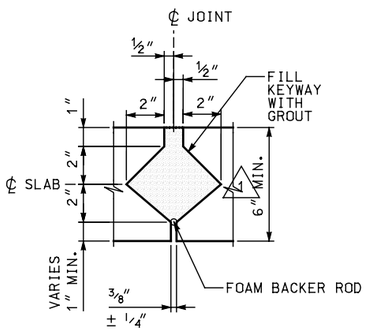

SECTION D

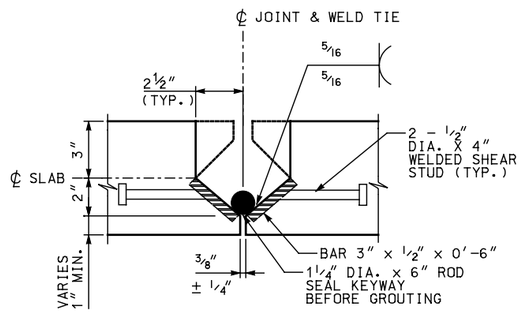

SECTION C

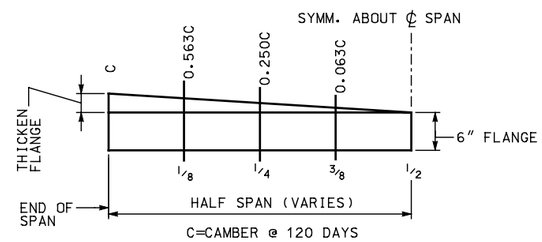

GIRDER FLANGE THICKENING **

** THICKEN FLANGE TO COMPENSATE FOR CAMBER DUE TO PRESTRESS. GIRDERS WITH FINAL CAMBER VALUES SMALLER THAN 3/4″ ARE EXEMPT FROM THIS REQUIREMENT. FLANGE THICKENING SHALL BE USED ONLY IF NEEDED BY DESIGN.

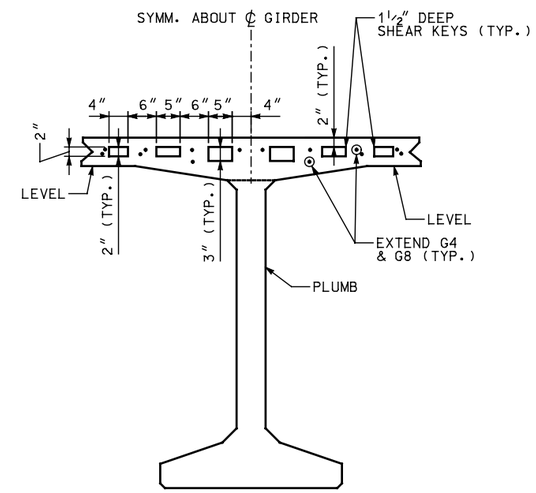

GIRDER END

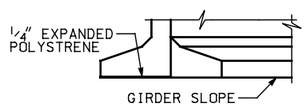

ELEVATION

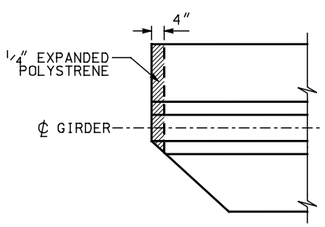

PLAN

10 **BOTTOM FLANGE SPALL PROTECTION DETAIL**

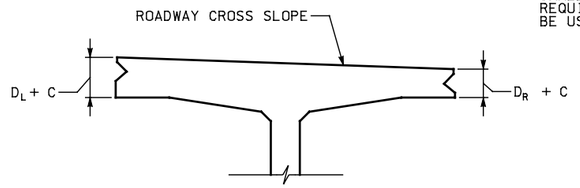

12 **CROSS SLOPE DETAIL** △1

NOTE: ADJUST D_L AND D_R TO PROVIDE ROADWAY CROSS SLOPE (6″ MIN.)

GIRDER SCHEDULE

SPAN	GIRDER	THETA 1 DEG. ③	THETA 2 DEG. ③	PLAN LENGTH (ALONG GIRDER GRADE)	MIN. CONC. COMPR. STRENGTH F′CI KSI	MIN. CONC. COMPR. STRENGTH F′C KSI	HARPED* NO. OF STRANDS	HARPED* JACKING FORCE (KIPS)	STRAIGHT NO. OF STRANDS	STRAIGHT JACKING FORCE (KIPS)	LOCATION OF C.G. STRANDS Ecl ⑥	LOCATION OF C.G. STRANDS Es ⑥	LOCATION OF C.G. STRANDS Ehcl ⑥	LOCATION OF C.G. STRANDS Ehend ⑤	CAMBER = C RELEASE △	CAMBER = C 30 △	CAMBER = C 120 △	TOP FLANGE CROSS SLOPE D_L ⑫	TOP FLANGE CROSS SLOPE D_R ⑫
-	-	-	-		-	-	-	-	-	-	-	-	-	-	-	-	-	-	-
-	-	-	-		-	-	-	-	-	-	-	-	-	-	-	-	-	-	-
-	-	-	-		-	-	-	-	-	-	-	-	-	-	-	-	-	-	-
-	-	-	-		-	-	-	-	-	-	-	-	-	-	-	-	-	-	-

△1

* THE NUMBER OF HARPED STRANDS SHOULD NOT EXCEED 1/2 OF THE NUMBER OF STRAIGHT STRANDS.

NOTE:
DIMENSIONS SHALL BE SHOWN IN US CUSTOMARY UNITS TO THE NEAREST 1/8 INCH.

NO.	DATE	BY	REMARKS
1	06/18/09	MPC	MODIFIED CALLOUTS FOR TOP FLANGE THICKNESS. ADDED DL AND DR VALUES TO SCHEDULE

REVISIONS

UTAH DEPARTMENT OF TRANSPORTATION
SALT LAKE CITY, UTAH
STRUCTURES DIVISION

CHECK ____ CHECK ____ CHECK ____
DESIGN ____ DRAWN ____ QUANT. ____
APPROVAL RECOMM. ____ DATE ____ SENIOR DESIGN ENGR. ____
APPROVED FOR USE BY UDOT ____ DATE ____ UDOT BRIDGE ENGR. ____

TYPICAL DETAIL SHEET
PRETENSIONED DECK BULB TEE
UDBT58 GIRDER DETAILS 2

PROJECT NUMBER

COUNTY
UDBT58-2
DRG. NO.
SHT. OF

UDBT58c2.dgn
7/8/2009

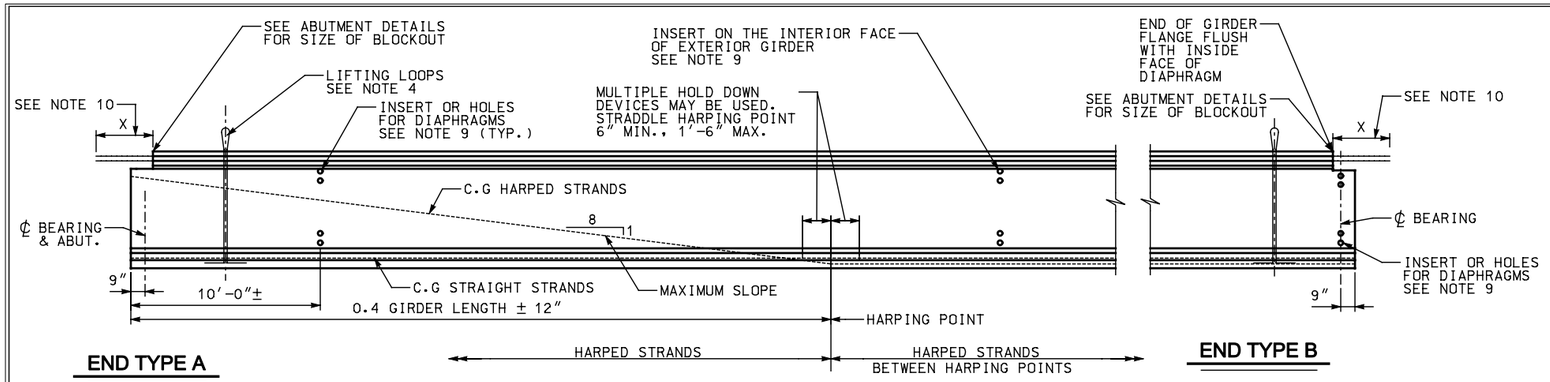

1 **GIRDER ELEVATION**

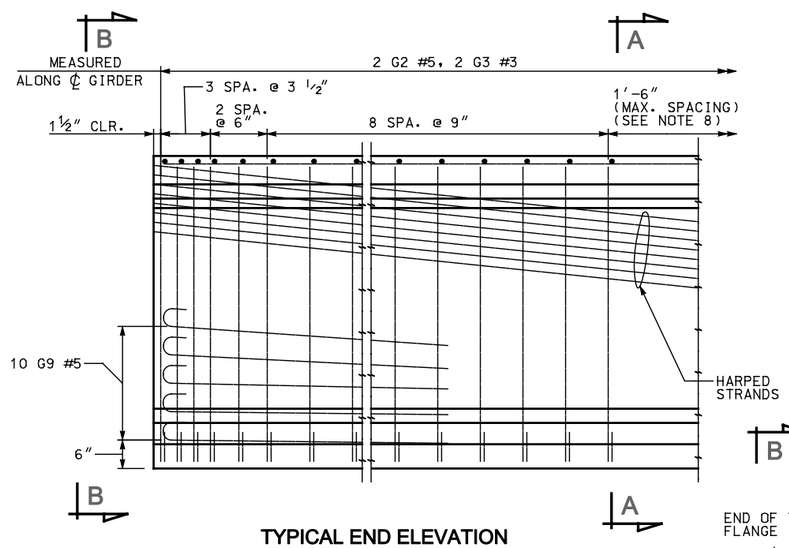

TYPICAL END ELEVATION

END TYPE A SHOWN, TYPE B SIMILAR

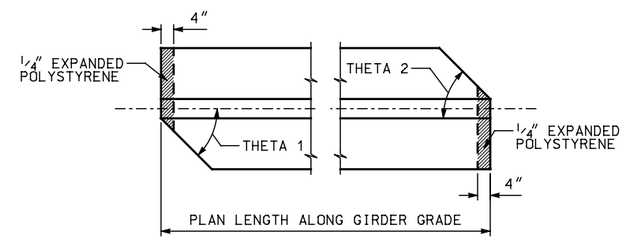

3 **SKEWED END DETAILS**

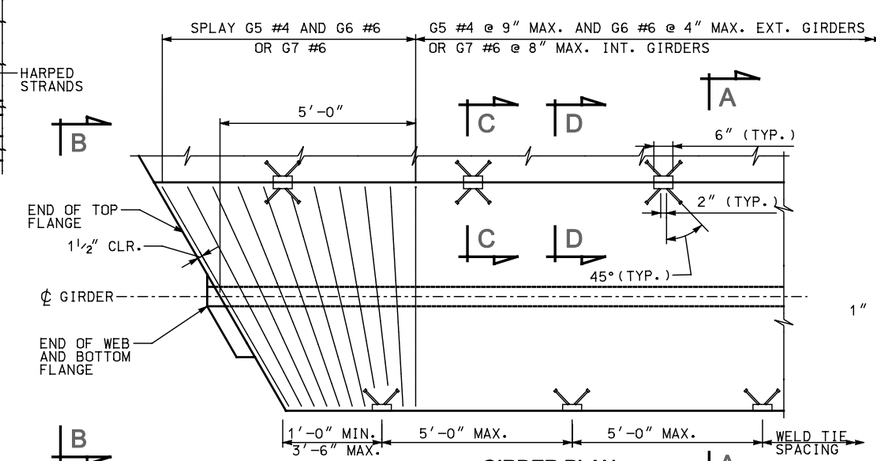

GIRDER PLAN

OMIT WELD TIES ON EXTERIOR EDGE OF EXTERIOR GIRDER. (STRANDS AND LONGITUDINAL BARS NOT SHOWN)

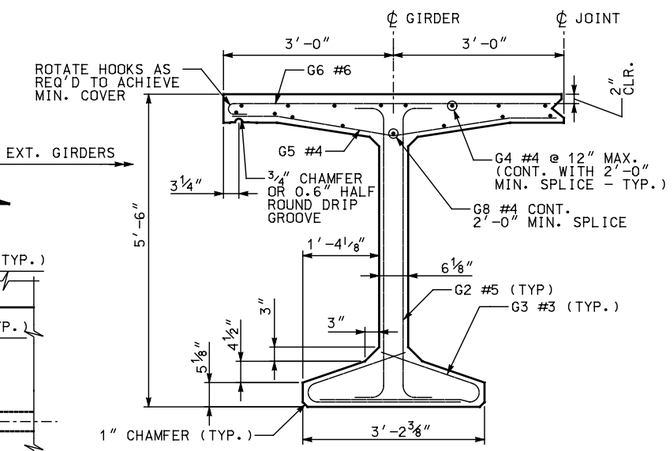

SECTION A

NOTE: TOP FLANGE DESIGNED FOR 42″ SINGLE SLOPE CONCRETE PARAPET. PARAPET REINFORCING NOT SHOWN.

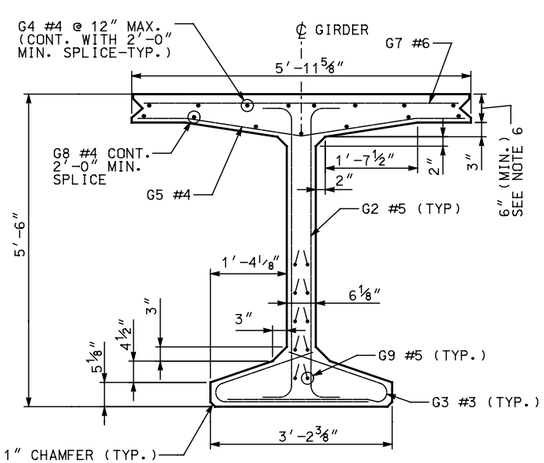

VIEW B

DIAPHRAGM TYPE	END TYPE	X
INTEGRAL ABUTMENT	A	
CANTILEVER ABUTMENT	B	0″

MARK	LOCATION	SIZE	BENDING DIAGRAM (ALL DIMENSIONS ARE OUT TO OUT)
G2	GIRDER STIRRUPS	5	
G3✱	BOTTOM FLANGE TIES	3	
G4✱	TOP OF TOP FLANGE - LONGIT.	4	STR.
G5✱	BOT. OF TOP FLANGE - TRANSV.	4	STR.
G6✱	TOP TRANSV. - EXT. GIRDER	6	
G7✱	TOP TRANSV. - INT. GIRDER	6	STR.
G8✱	BOT. OF TOP FLANGE - LONGIT.	4	STR.
G9	GIRDER LONGITUDINAL	5	STR.

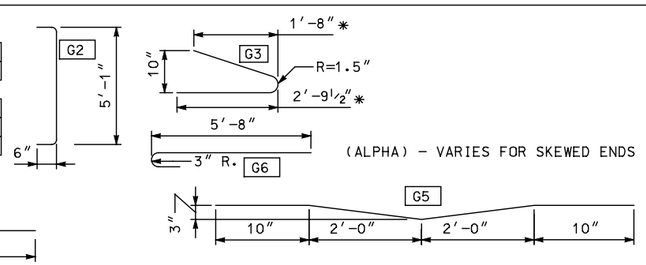

✱ = VARIES FOR SKEWED ENDS

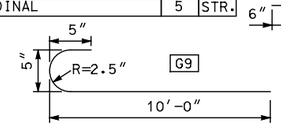

NOTES

1. INCREASE PLAN LENGTH AS NECESSARY TO COMPENSATE FOR SHORTENING DUE TO PRESTRESS AND SHRINKAGE.
2. ALL PRETENSIONED AND TEMPORARY STRANDS TO BE [0.6″ DIA.] LOW RELAXATION STRANDS (AASHTO M203 GRADE 270.)
3. FOR GIRDER ENDS REQUIRING BAR OR STRAND EXTENSION SEE SUPLEMENTAL DETAILS. FOR END TYPE 'B', CUT ALL STRANDS BELOW CONCRETE SURFACE AND GROUT WITH AN APPROVED EPOXY GROUT.
4. CONTRACTOR TO DESIGN AND INSTALL LIFTING EMBEDMENTS IN ACCORDANCE WITH THE STANDARD SPECIFICATIONS.
5. CAUTION TO BE EXERCISED IN HANDLING AND PLACING GIRDERS. ALL GIRDERS TO BE CHECKED BY THE CONTRACTOR TO ENSURE THAT THEY ARE BRACED ADEQUATELY TO PREVENT TIPPING AND TO CONTROL LATERAL BENDING DURING SHIPPING. ONCE ERECTED, ALL GIRDERS TO BE BRACED LATERALLY TO PREVENT TIPPING UNTIL THE DIAPHRAGMS HAVE BEEN INSTALLED.
6. THICKEN FLANGE TO COMPENSATE FOR CAMBER. SEE "GIRDER FLANGE THICKENING" DETAIL.
7. FOR DIAPHRAGM NOTES SEE SHEET BT-4.
8. DESIGN GIRDER STIRRUP SPACING IN THIS REGION.
9. SEE FRAMING PLAN FOR DIAPHRAGM LOCATIONS AND SEE DIAPHRAGM DETAILS FOR CONNECTION REQUIREMENTS.
10. FIELD BENDING MAY BE REQUIRED TO OBTAIN 1½″ CONCRETE COVER IN CLOSURE POUR.

NO.	DATE	BY	REMARKS

REVISIONS

UTAH DEPARTMENT OF TRANSPORTATION
SALT LAKE CITY, UTAH
STRUCTURES DIVISION

DESIGN — CHECK
DRAWN — CHECK
QUANT. — CHECK

APPROVAL RECOMM. — DATE — SENIOR DESIGN ENGR.
APPROVED FOR USE BY UDOT — DATE — UDOT BRIDGE ENGR.

TYPICAL DETAIL SHEET
PRETENSIONED DECK BULB TEE
UDBT66 GIRDER DETAILS 1

PROJECT NUMBER

COUNTY

UDBT66 - 1
DRG. NO.

SHT. OF

UDBT66G1.dgn
7/8/2009

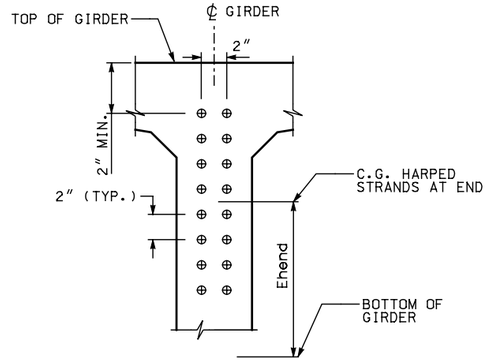

5 STRAND PATTERN AT GIRDER END

⊕ DENOTES HARPED STRAND

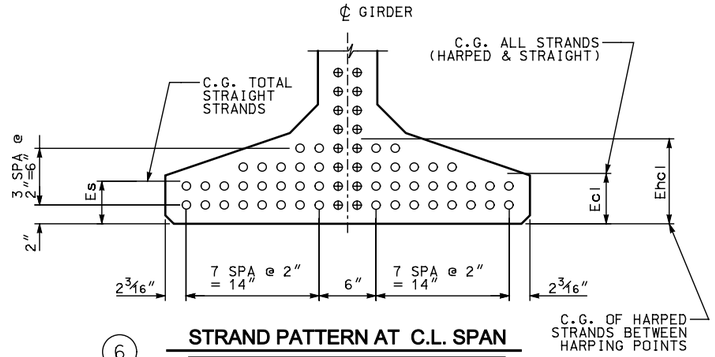

6 STRAND PATTERN AT C.L. SPAN

⊕ DENOTES HARPED STRAND

○ DENOTES STRAIGHT STRAND

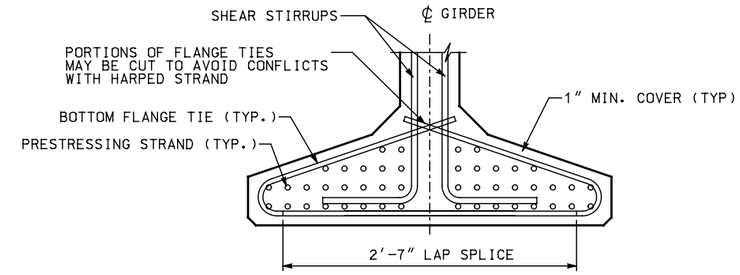

11 BOTTOM FLANGE REINFORCING

GIRDER END SHOWN, MIDDLE SECTION SIMILAR

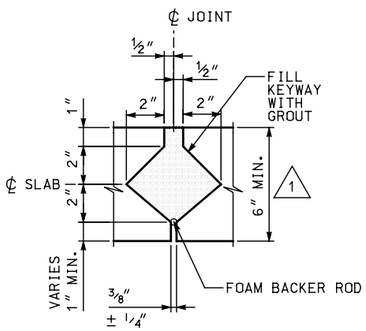

SECTION D

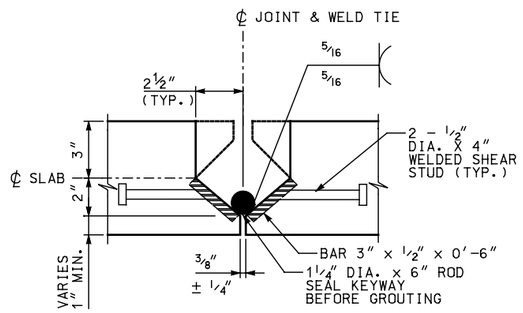

SECTION C

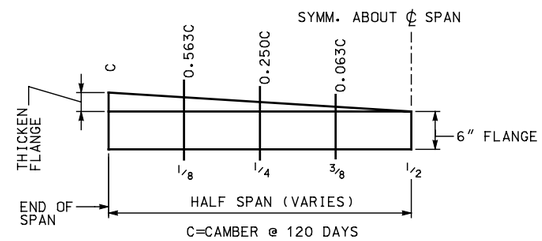

GIRDER FLANGE THICKENING **

** THICKEN FLANGE TO COMPENSATE FOR CAMBER DUE TO PRESTRESS. GIRDERS WITH FINAL CAMBER VALUES SMALLER THAN 3/4″ ARE EXEMPT FROM THIS REQUIREMENT. FLANGE THICKENING SHALL BE USED ONLY IF NEEDED BY DESIGN.

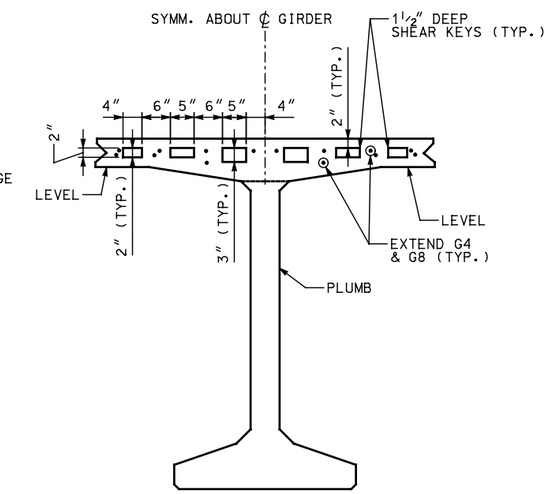

GIRDER END

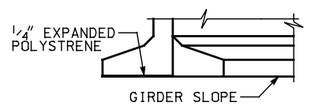

ELEVATION

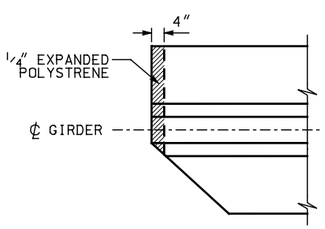

PLAN

10 BOTTOM FLANGE SPALL PROTECTION DETAIL

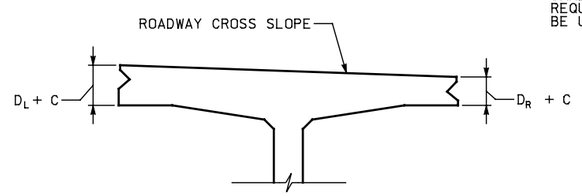

12 CROSS SLOPE DETAIL 1

NOTE: ADJUST D_L AND D_R TO PROVIDE ROADWAY CROSS SLOPE (6″ MIN.)

GIRDER SCHEDULE

SPAN	GIRDER	THETA 1 DEG. ③	THETA 2 DEG. ③	PLAN LENGTH (ALONG GIRDER GRADE)	MIN. CONC. COMPR. STRENGTH F'CI KSI	MIN. CONC. COMPR. STRENGTH F'C KSI	HARPED* NO. OF STRANDS	HARPED* JACKING FORCE (KIPS)	STRAIGHT NO. OF STRANDS	STRAIGHT JACKING FORCE (KIPS)	LOCATION OF C.G. STRANDS Ecl ⑥	Es ⑥	Ehcl ⑥	Ehend ⑤	CAMBER = C RELEASE △	30 △	120 △	TOP FLANGE CROSS SLOPE D_L ⑫	D_R ⑫
-	-	-	-		-	-	-	-	-	-	-	-	-	-	-	-	-	-	-
-	-	-	-		-	-	-	-	-	-	-	-	-	-	-	-	-	-	-
-	-	-	-		-	-	-	-	-	-	-	-	-	-	-	-	-	-	-
-	-	-	-		-	-	-	-	-	-	-	-	-	-	-	-	-	-	-

1

* THE NUMBER OF HARPED STRANDS SHOULD NOT EXCEED 1/2 OF THE NUMBER OF STRAIGHT STRANDS.

NOTE:
DIMENSIONS SHALL BE SHOWN IN US CUSTOMARY UNITS TO THE NEAREST 1/8 INCH.

NO.	DATE	BY	REMARKS
1	08/18/09	MPC	MODIFIED CALLOUTS FOR TOP FLANGE THICKNESS. ADDED DL AND DR VALUES TO SCHEDULE

REVISIONS

UTAH DEPARTMENT OF TRANSPORTATION
SALT LAKE CITY, UTAH
STRUCTURES DIVISION

CHECK ____ CHECK ____ CHECK ____
DESIGN ____ DRAWN ____ QUANT. ____
APPROVAL RECOMM. ____ DATE ____ SENIOR DESIGN ENGR. ____
APPROVED FOR USE BY UDOT ____ DATE ____ UDOT BRIDGE ENGR. ____

TYPICAL DETAIL SHEET
PRETENSIONED DECK BULB TEE
UDBT66 GIRDER DETAILS 2

PROJECT NUMBER

COUNTY
UDBT66-2
DRG. NO.
SHT. OF

UDBT66G2.dgn
7/8/2009

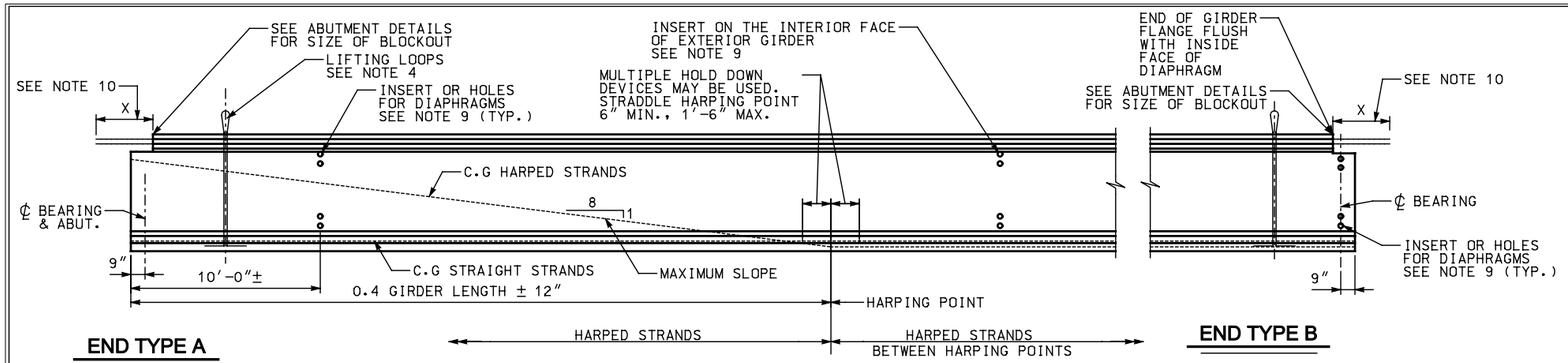

1 GIRDER ELEVATION

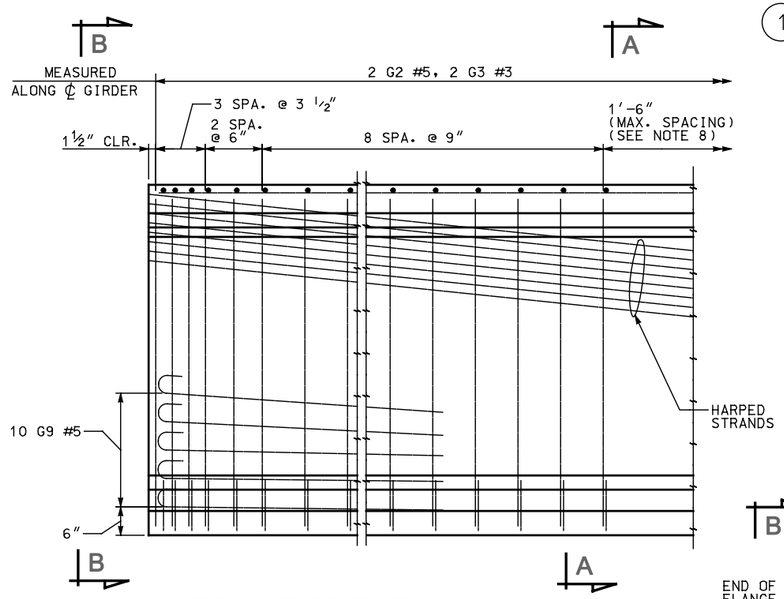

TYPICAL END ELEVATION

END TYPE A SHOWN, TYPE B SIMILAR

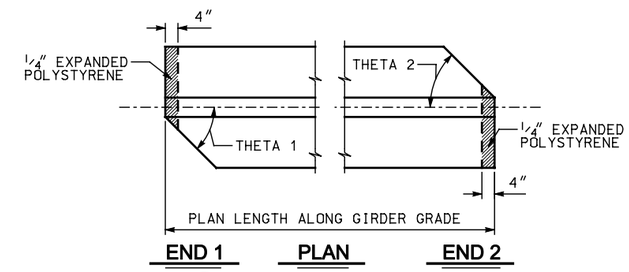

3 SKEWED END DETAILS

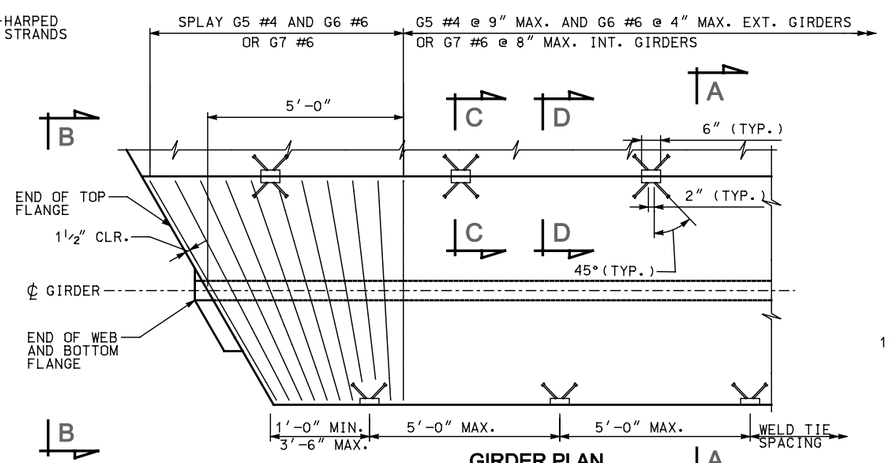

GIRDER PLAN

OMIT WELD TIES ON EXTERIOREDGE OF EXTERIOR GIRDER (STRANDS AND LONGITUDINAL BARS NOT SHOWN)

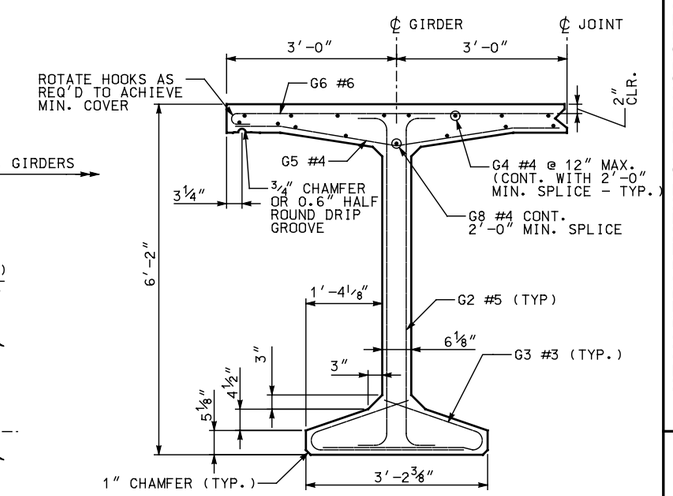

SECTION A

NOTE: TOP FLANGE DESIGNED FOR 42″ SINGLE SLOPE CONCRETE PARAPET. PARAPET REINFORCING NOT SHOWN.

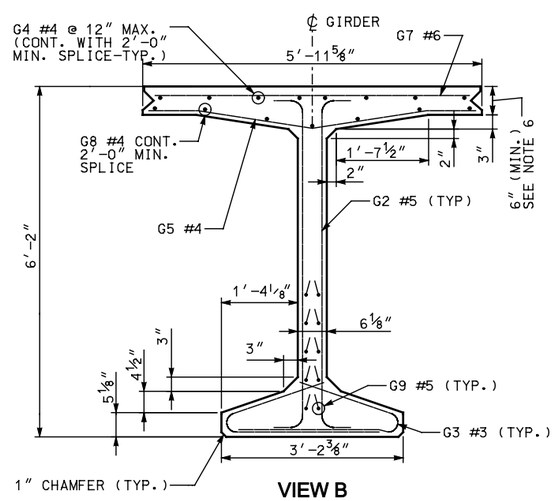

VIEW B

NOTES

1. INCREASE PLAN LENGTH AS NECESSARY TO COMPENSATE FOR SHORTENING DUE TO PRESTRESS AND SHRINKAGE.
2. ALL PRETENSIONED AND TEMPORARY STRANDS TO BE [0.6″ DIA.] LOW RELAXATION STRANDS (AASHTO M203 GRADE 270.)
3. FOR GIRDER ENDS REQUIRING BAR OR STRAND EXTENSION SEE SUPLEMENTAL DETAILS. FOR END TYPE 'B', CUT ALL STRANDS BELOW CONCRETE SURFACE AND GROUT WITH AN APPROVED EPOXY GROUT.
4. CONTRACTOR TO DESIGN AND INSTALL LIFTING EMBEDMENTS IN ACCORDANCE WITH THE STANDARD SPECIFICATIONS.
5. CAUTION TO BE EXERCISED IN HANDLING AND PLACING GIRDERS. ALL GIRDERS TO BE CHECKED BY THE CONTRACTOR TO ENSURE THAT THEY ARE BRACED ADEQUATELY TO PREVENT TIPPING AND TO CONTROL LATERAL BENDING DURING SHIPPING. ONCE ERECTED, ALL GIRDERS TO BE BRACED LATERALLY TO PREVENT TIPPING UNTIL THE DIAPHRAGMS HAVE BEEN INSTALLED.
6. THICKEN FLANGE TO COMPENSATE FOR CAMBER. SEE "GIRDER FLANGE THICKENING" DETAIL.
7. FOR DIAPHRAGM NOTES SEE SHEET BT-4.
8. DESIGN GIRDER STIRRUP SPACING IN THIS REGION.
9. SEE FRAMING PLAN FOR DIAPHRAGM LOCATIONS AND SEE DIAPHRAGM DETAILS FOR CONNECTION REQUIREMENTS.
10. FIELD BENDING MAY BE REQUIRED TO OBTAIN 1½″ CONCRETE COVER IN CLOSURE POUR.

DIAPHRAGM TYPE	END TYPE	X
INTEGRAL ABUTMENT	A	
CANTILEVER ABUTMENT	B	0″

MARK	LOCATION	SIZE	BENDING DIAGRAM (ALL DIMENSIONS ARE OUT TO OUT)
G2	GIRDER STIRRUPS	5	
G3*	BOTTOM FLANGE TIES	3	
G4*	TOP OF TOP FLANGE – LONGIT.	4 STR.	
G5*	BOT. OF TOP FLANGE – TRANSV.	4 STR.	
G6*	TOP TRANSV. – EXT. GIRDER	6	
G7*	TOP TRANSV. – INT. GIRDER	6 STR.	
G8*	BOT. OF TOP FLANGE – LONGIT.	4 STR.	
G9	GIRDER LONGITUDINAL	5 STR.	

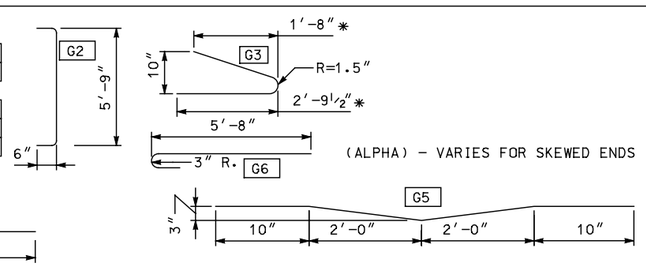

* = VARIES FOR SKEWED ENDS

NO.	DATE	BY	REMARKS

REVISIONS

UTAH DEPARTMENT OF TRANSPORTATION
SALT LAKE CITY, UTAH
STRUCTURES DIVISION

DESIGN — CHECK
DRAWN — CHECK
QUANT. — CHECK
APPROVAL RECOMM. — DATE — SENIOR DESIGN ENGR.
APPROVED FOR USE BY UDOT — DATE — UDOT BRIDGE ENGR.

TYPICAL DETAIL SHEET
PRETENSIONED DECK BULB TEE
UDBT74 GIRDER DETAILS 1

PROJECT NUMBER

COUNTY

UDBT74 - 1
DRG. NO.

SHT. OF

UDBT74G1.dgn
7/8/2009

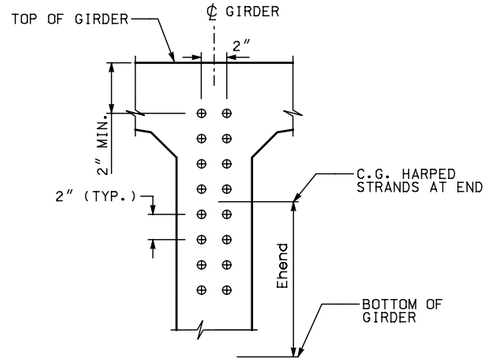

5 STRAND PATTERN AT GIRDER END

⊕ DENOTES HARPED STRAND

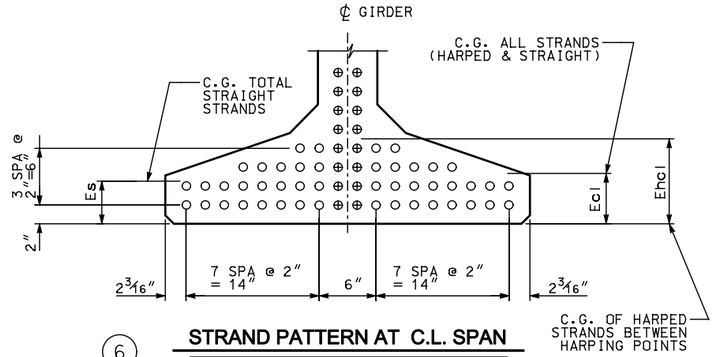

6 STRAND PATTERN AT C.L. SPAN

⊕ DENOTES HARPED STRAND

○ DENOTES STRAIGHT STRAND

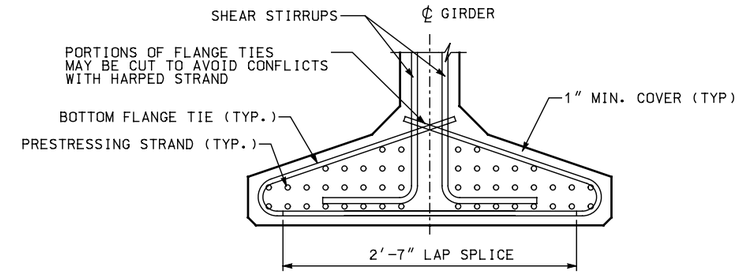

11 BOTTOM FLANGE REINFORCING

GIRDER END SHOWN, MIDDLE SECTION SIMILAR

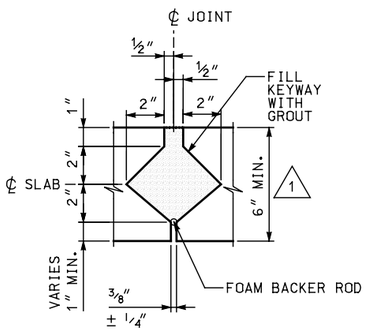

SECTION D

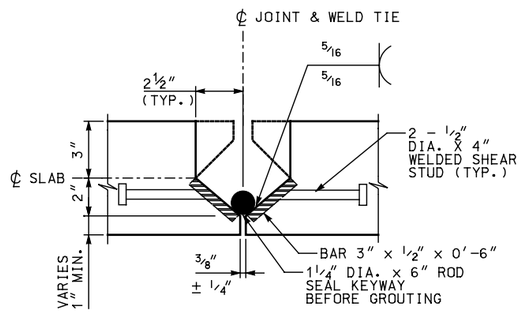

SECTION C

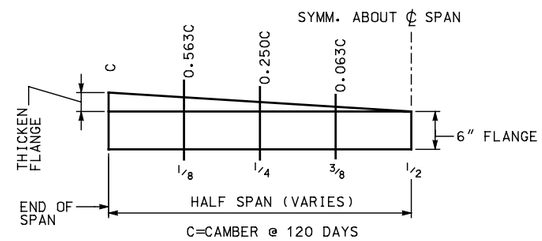

GIRDER FLANGE THICKENING **

** THICKEN FLANGE TO COMPENSATE FOR CAMBER DUE TO PRESTRESS. GIRDERS WITH FINAL CAMBER VALUES SMALLER THAN 3/4″ ARE EXEMPT FROM THIS REQUIREMENT. FLANGE THICKENING SHALL BE USED ONLY IF NEEDED BY DESIGN.

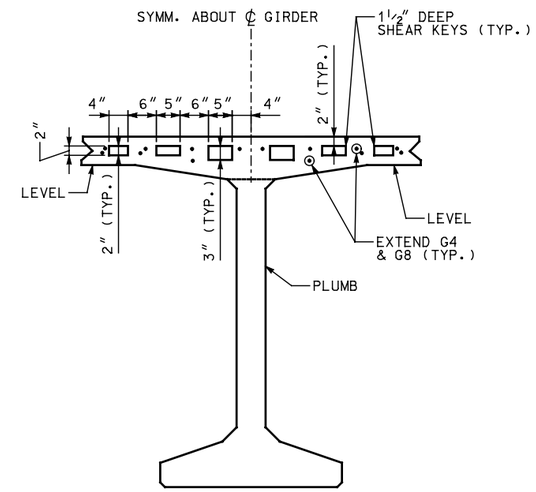

GIRDER END

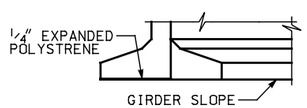

ELEVATION

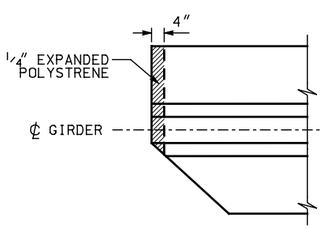

PLAN

10 BOTTOM FLANGE SPALL PROTECTION DETAIL

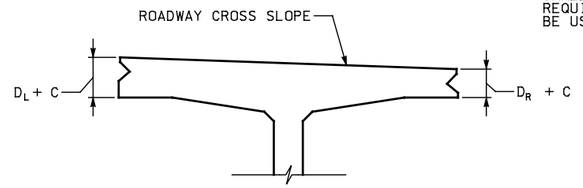

12 CROSS SLOPE DETAIL 1

NOTE: ADJUST D_L AND D_R TO PROVIDE ROADWAY CROSS SLOPE (6″ MIN.)

GIRDER SCHEDULE

SPAN	GIRDER	THETA 1 DEG. (3)	THETA 2 DEG. (3)	PLAN LENGTH (ALONG GIRDER GRADE)	MIN. CONC. COMPR. STRENGTH F'CI KSI	MIN. CONC. COMPR. STRENGTH F'C KSI	HARPED* NO. OF STRANDS	HARPED* JACKING FORCE (KIPS)	STRAIGHT NO. OF STRANDS	STRAIGHT JACKING FORCE (KIPS)	LOCATION OF C.G. STRANDS Ecl (6)	Es (6)	Ehcl (6)	Ehend (5)	CAMBER = C RELEASE △	30 △	120 △	TOP FLANGE CROSS SLOPE D_L (12)	D_R (12)
-	-	-	-		-	-	-	-	-	-	-	-	-	-	-	-	-	-	-
-	-	-	-		-	-	-	-	-	-	-	-	-	-	-	-	-	-	-
-	-	-	-		-	-	-	-	-	-	-	-	-	-	-	-	-	-	-
-	-	-	-		-	-	-	-	-	-	-	-	-	-	-	-	-	-	-

1

* THE NUMBER OF HARPED STRANDS SHOULD NOT EXCEED 1/2 OF THE NUMBER OF STRAIGHT STRANDS.

NOTE:
DIMENSIONS SHALL BE SHOWN IN US CUSTOMARY UNITS TO THE NEAREST 1/8 INCH.

NO.	DATE	BY	REMARKS
1	08/18/09	MPC	MODIFIED CALLOUTS FOR TOP FLANGE THICKNESS. ADDED DL AND DR VALUES TO SCHEDULE

REVISIONS

UTAH DEPARTMENT OF TRANSPORTATION
SALT LAKE CITY, UTAH
STRUCTURES DIVISION

CHECK ____ CHECK ____ CHECK ____
DESIGN ____ DRAWN ____ QUANT. ____
APPROVAL RECOMM. ____ DATE ____ SENIOR DESIGN ENGR. ____
APPROVED FOR USE BY UDOT ____ DATE ____ UDOT BRIDGE ENGR. ____

TYPICAL DETAIL SHEET
PRETENSIONED DECK BULB TEE
UDBT74 GIRDER DETAILS 2

PROJECT NUMBER

COUNTY
UDBT74-2
DRG. NO.
SHT. OF

UDBT74d2.dgn
7/8/2009

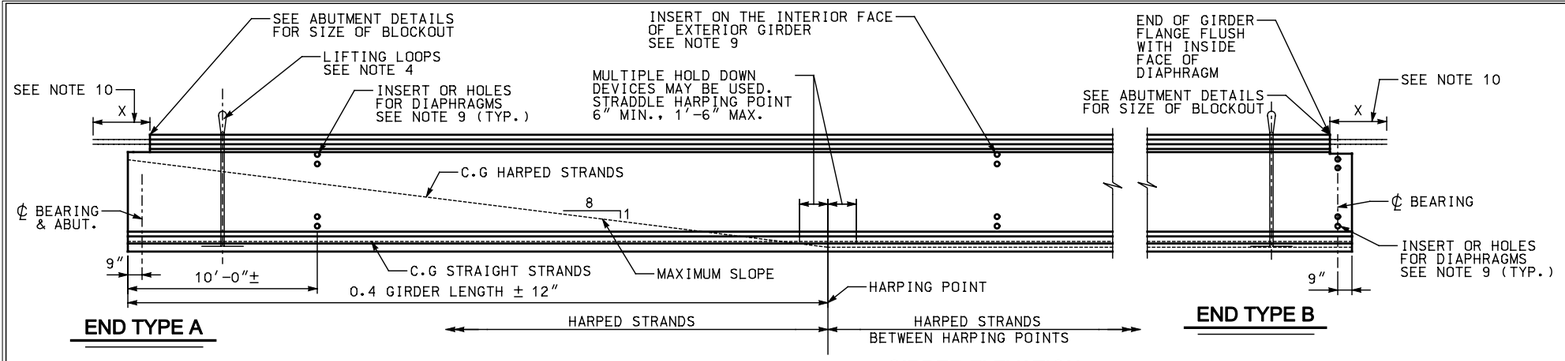

1 GIRDER ELEVATION

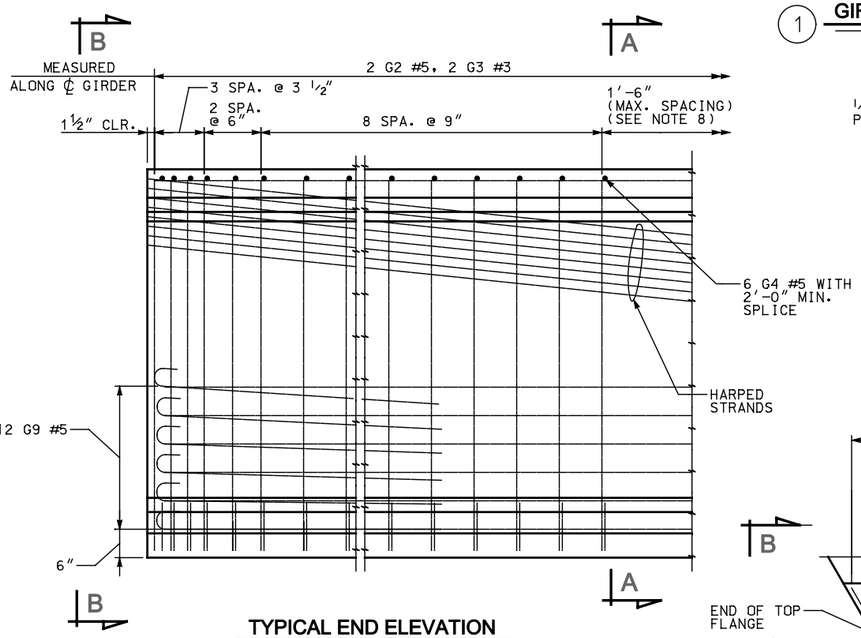

TYPICAL END ELEVATION

END TYPE A SHOWN, TYPE B SIMILAR

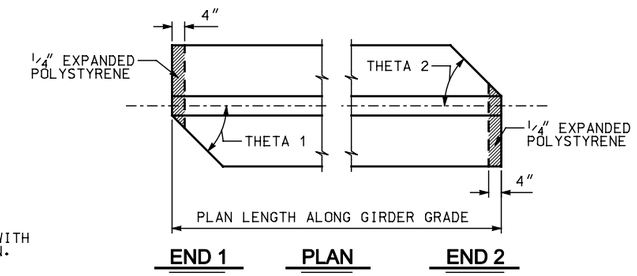

3 SKEWED END DETAILS

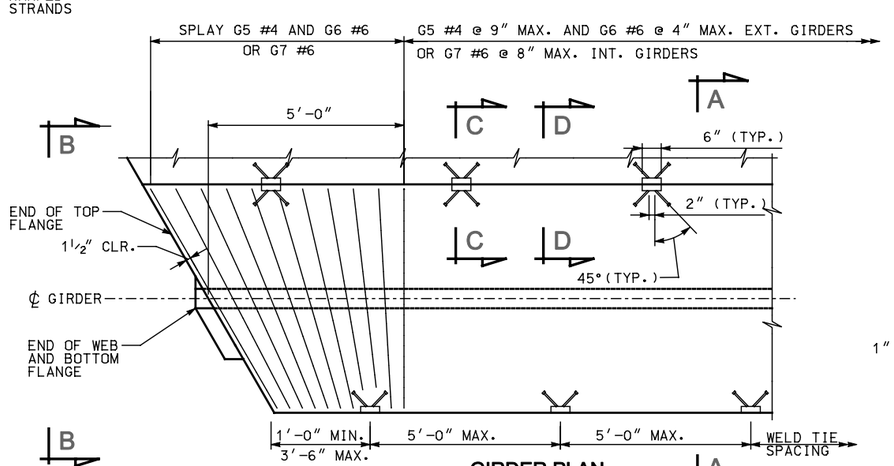

GIRDER PLAN

OMIT WELD TIES ON EXTERIOR EDGE OF EXTERIOR GIRDER. (STRANDS AND LONGITUDINAL BARS NOT SHOWN)

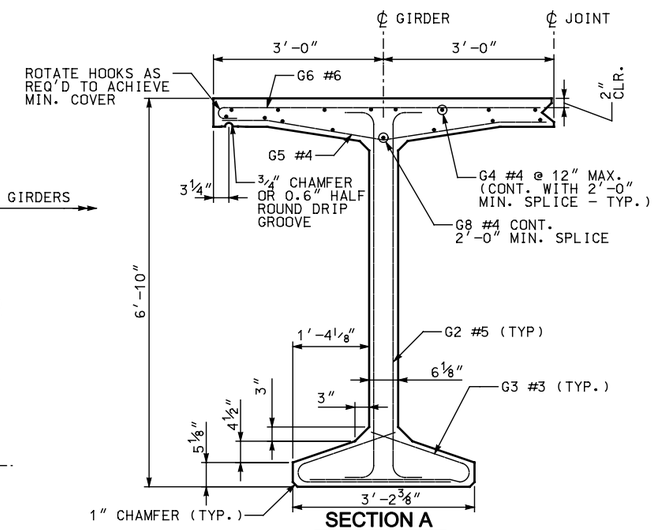

SECTION A

NOTE: TOP FLANGE DESIGNED FOR 42" SINGLE SLOPE CONCRETE PARAPET. PARAPET REINFORCING NOT SHOWN.

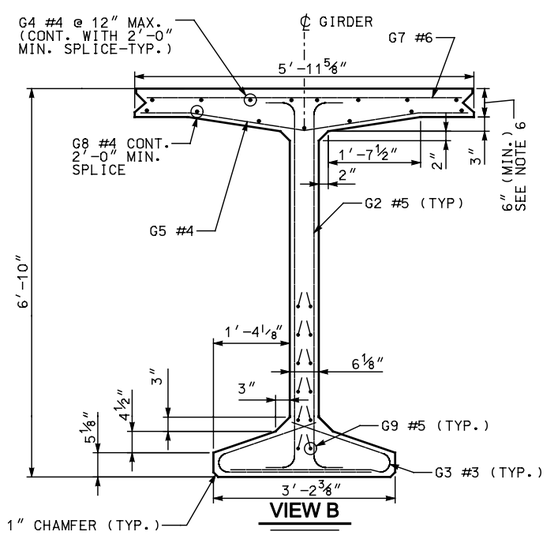

VIEW B

DIAPHRAGM TYPE	END TYPE	X
INTEGRAL ABUTMENT	A	
CANTILEVER ABUTMENT	B	0"

MARK	LOCATION	SIZE	
G2	GIRDER STIRRUPS	5	
G3*	BOTTOM FLANGE TIES	3	
G4*	TOP OF TOP FLANGE - LONGIT.	4	STR.
G5*	BOT. OF TOP FLANGE - TRANSV.	4	STR.
G6*	TOP TRANSV. - EXT. GIRDER	6	
G7*	TOP TRANSV. - INT. GIRDER	6	STR.
G8*	BOT. OF TOP FLANGE - LONGIT.	4	STR.
G9	GIRDER LONGITUDINAL	5	STR.

BENDING DIAGRAM (ALL DIMENSIONS ARE OUT TO OUT)

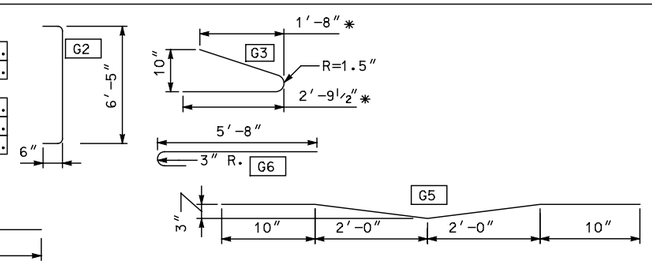

* = VARIES FOR SKEWED ENDS

NOTES

1. INCREASE PLAN LENGTH AS NECESSARY TO COMPENSATE FOR SHORTENING DUE TO PRESTRESS AND SHRINKAGE.
2. ALL PRETENSIONED AND TEMPORARY STRANDS TO BE [0.6" DIA.] LOW RELAXATION STRANDS (AASHTO M203 GRADE 270.)
3. FOR GIRDER ENDS REQUIRING BAR OR STRAND EXTENSION SEE SUPLEMENTAL DETAILS. FOR END TYPE 'B', CUT ALL STRANDS BELOW CONCRETE SURFACE AND GROUT WITH AN APPROVED EPOXY GROUT.
4. CONTRACTOR TO DESIGN AND INSTALL LIFTING EMBEDMENTS IN ACCORDANCE WITH THE STANDARD SPECIFICATIONS.
5. CAUTION TO BE EXERCISED IN HANDLING AND PLACING GIRDERS. ALL GIRDERS TO BE CHECKED BY THE CONTRACTOR TO ENSURE THAT THEY ARE BRACED ADEQUATELY TO PREVENT TIPPING AND TO CONTROL LATERAL BENDING DURING SHIPPING. ONCE ERECTED, ALL GIRDERS TO BE BRACED LATERALLY TO PREVENT TIPPING UNTIL THE DIAPHRAGMS HAVE BEEN INSTALLED.
6. THICKEN FLANGE TO COMPENSATE FOR CAMBER. SEE "GIRDER FLANGE THICKENING" DETAIL.
7. FOR DIAPHRAGM NOTES SEE SHEET BT-4.
8. DESIGN GIRDER STIRRUP SPACING IN THIS REGION.
9. SEE FRAMING PLAN FOR DIAPHRAGM LOCATIONS AND SEE DIAPHRAGM DETAILS FOR CONNECTION REQUIREMENTS.
10. FIELD BENDING MAY BE REQUIRED TO OBTAIN 1 1/2" CONCRETE COVER IN CLOSURE POUR.

NO.	DATE	BY	REMARKS

REVISIONS

UTAH DEPARTMENT OF TRANSPORTATION
SALT LAKE CITY, UTAH
STRUCTURES DIVISION

DESIGN — CHECK
DRAWN — CHECK
QUANT. — CHECK

APPROVAL RECOMM. — DATE — SENIOR DESIGN ENGR.
APPROVED FOR USE BY UDOT — DATE — UDOT BRIDGE ENGR.

TYPICAL DETAIL SHEET
PRETENSIONED DECK BULB TEE
UDBT82 GIRDER DETAILS 1

PROJECT NUMBER

COUNTY

UDBT82 - 1
DRG. NO.

SHT. OF

UDBT82G1.dgn
7/8/2009

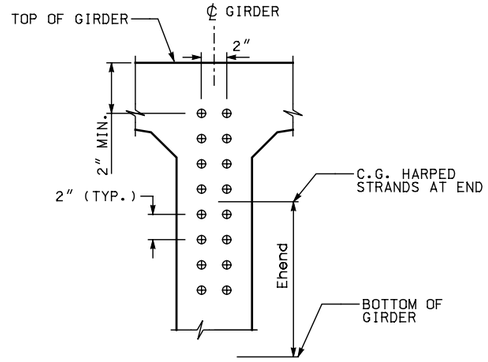

5 STRAND PATTERN AT GIRDER END

⊕ DENOTES HARPED STRAND

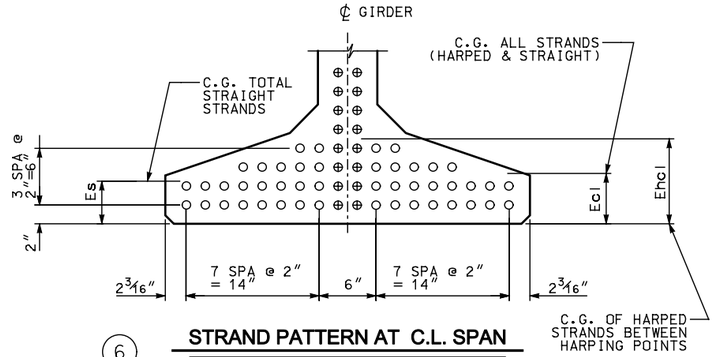

6 STRAND PATTERN AT C.L. SPAN

⊕ DENOTES HARPED STRAND

○ DENOTES STRAIGHT STRAND

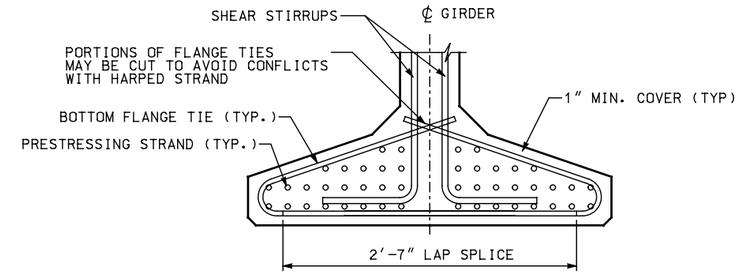

11 BOTTOM FLANGE REINFORCING

GIRDER END SHOWN, MIDDLE SECTION SIMILAR

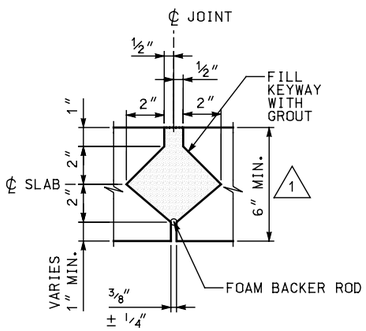

SECTION D

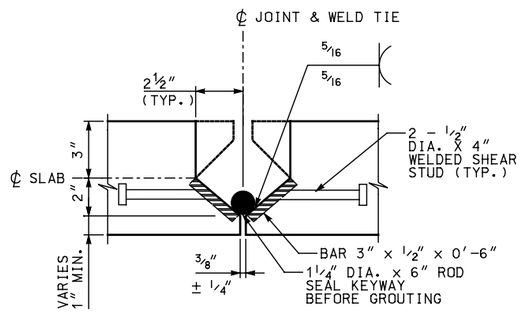

SECTION C

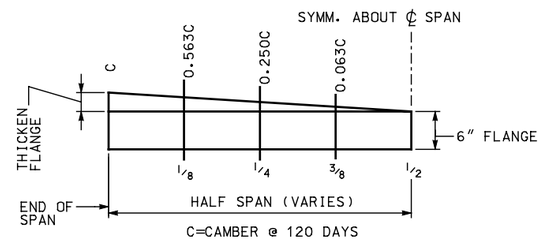

GIRDER FLANGE THICKENING **

** THICKEN FLANGE TO COMPENSATE FOR CAMBER DUE TO PRESTRESS. GIRDERS WITH FINAL CAMBER VALUES SMALLER THAN 3/4″ ARE EXEMPT FROM THIS REQUIREMENT. FLANGE THICKENING SHALL BE USED ONLY IF NEEDED BY DESIGN.

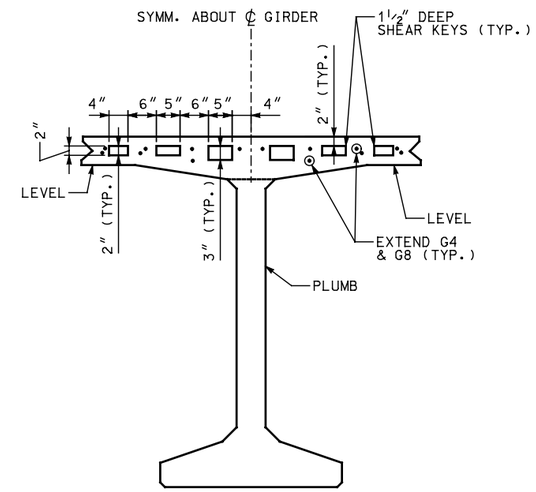

GIRDER END

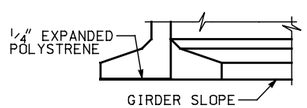

ELEVATION

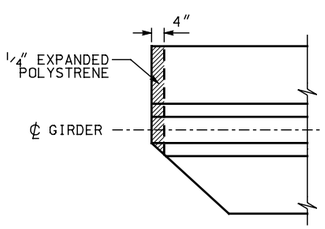

PLAN

10 BOTTOM FLANGE SPALL PROTECTION DETAIL

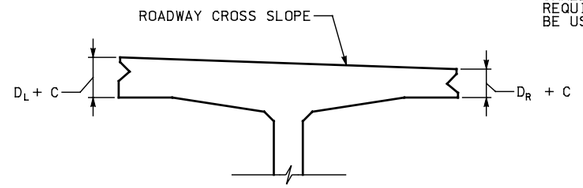

12 CROSS SLOPE DETAIL 1

NOTE: ADJUST D_L AND D_R TO PROVIDE ROADWAY CROSS SLOPE (6″ MIN.)

GIRDER SCHEDULE

SPAN	GIRDER	THETA 1 DEG. ③	THETA 2 DEG. ③	PLAN LENGTH (ALONG GIRDER GRADE)	MIN. CONC. COMPR. STRENGTH F'CI KSI	MIN. CONC. COMPR. STRENGTH F'C KSI	HARPED* NO. OF STRANDS	HARPED* JACKING FORCE (KIPS)	STRAIGHT NO. OF STRANDS	STRAIGHT JACKING FORCE (KIPS)	LOCATION OF C.G. STRANDS Ecl ⑥	Es ⑥	Ehcl ⑥	Ehend ⑤	CAMBER = C RELEASE △	30 △	120 △	TOP FLANGE CROSS SLOPE D_L ⑫	D_R ⑫
-	-	-	-		-	-	-	-	-	-	-	-	-	-	-	-	-	-	-
-	-	-	-		-	-	-	-	-	-	-	-	-	-	-	-	-	-	-
-	-	-	-		-	-	-	-	-	-	-	-	-	-	-	-	-	-	-
-	-	-	-		-	-	-	-	-	-	-	-	-	-	-	-	-	-	-

1

* THE NUMBER OF HARPED STRANDS SHOULD NOT EXCEED 1/2 OF THE NUMBER OF STRAIGHT STRANDS.

NOTE:
DIMENSIONS SHALL BE SHOWN IN US CUSTOMARY UNITS TO THE NEAREST 1/8 INCH.

NO.	DATE	BY	REMARKS
1	08/18/09	MPC	MODIFIED CALLOUTS FOR TOP FLANGE THICKNESS. ADDED DL AND DR VALUES TO SCHEDULE

REVISIONS

UTAH DEPARTMENT OF TRANSPORTATION
SALT LAKE CITY, UTAH
STRUCTURES DIVISION

CHECK ____ CHECK ____ CHECK ____
DESIGN ____ DRAWN ____ QUANT. ____
APPROVAL RECOMM. ____ DATE ____ SENIOR DESIGN ENGR. ____
APPROVED FOR USE BY UDOT ____ DATE ____ UDOT BRIDGE ENGR. ____

TYPICAL DETAIL SHEET
PRETENSIONED DECK BULB TEE
UDBT82 GIRDER DETAILS 2

PROJECT NUMBER

COUNTY
UDBT82-2
DRG. NO.
SHT. OF

UDBT82G2.dgn
7/8/2009

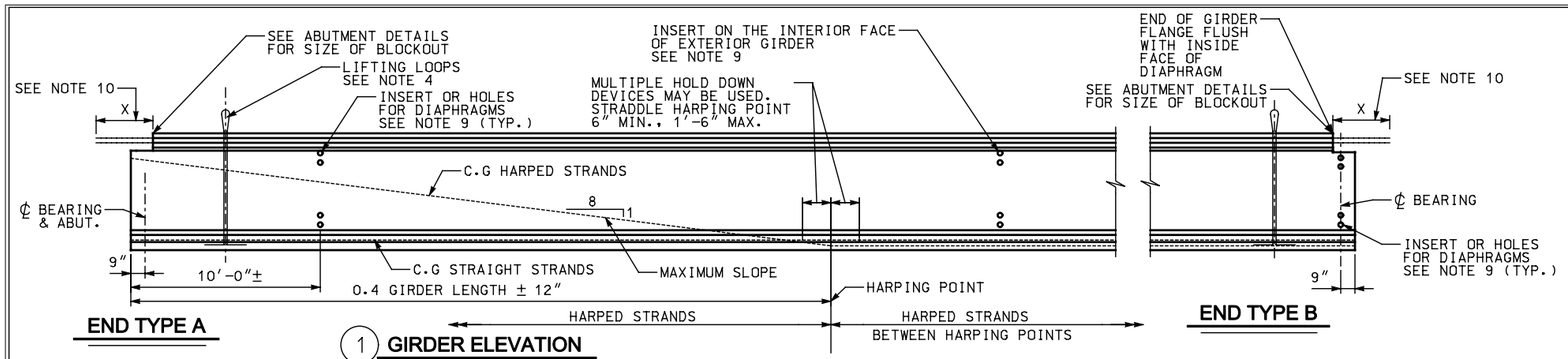

1 GIRDER ELEVATION

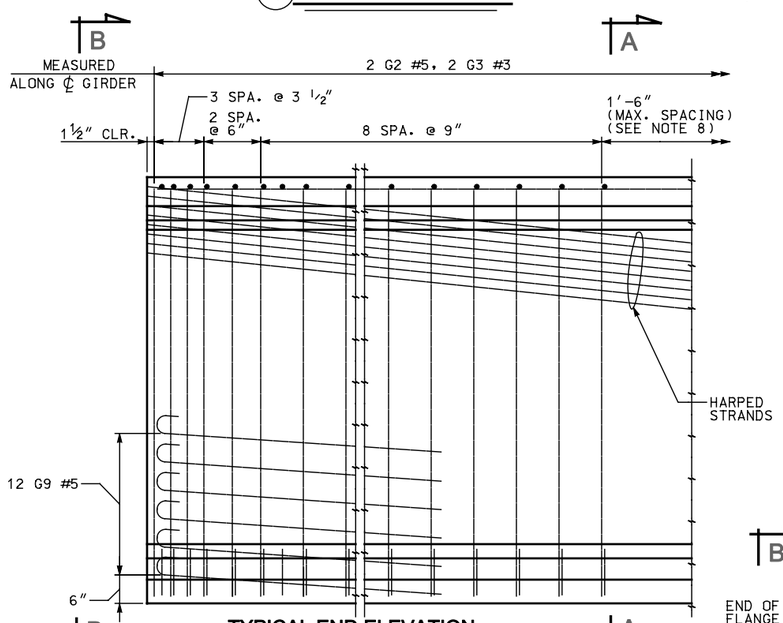

TYPICAL END ELEVATION

END TYPE A SHOWN, TYPE B SIMILAR

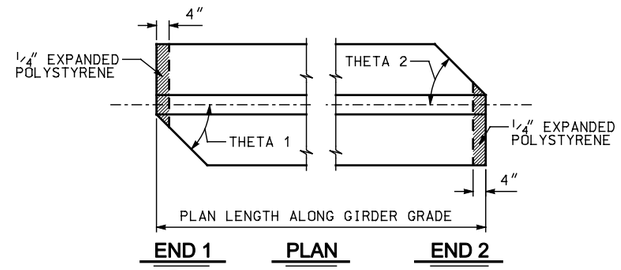

3 SKEWED END DETAILS

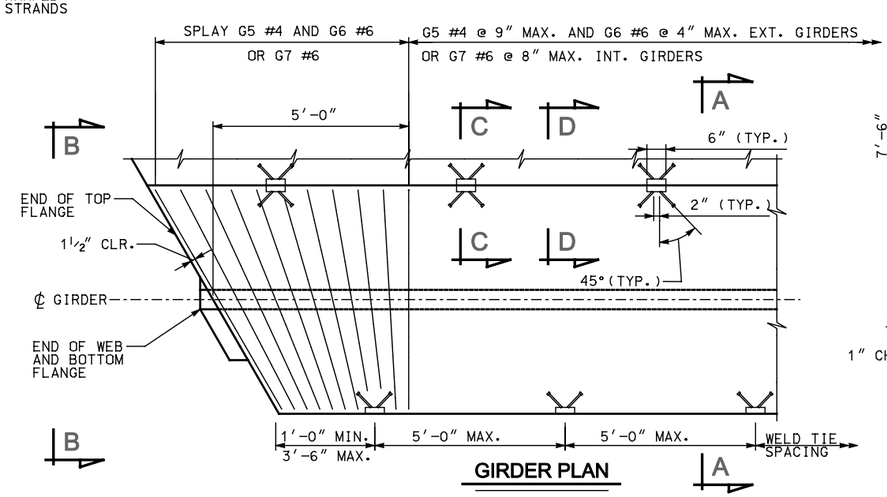

GIRDER PLAN

OMIT WELD TIES ON EXTERIOR EDGE OF EXTERIOR GIRDER. (STRANDS AND LONGITUDINAL BARS NOT SHOWN)

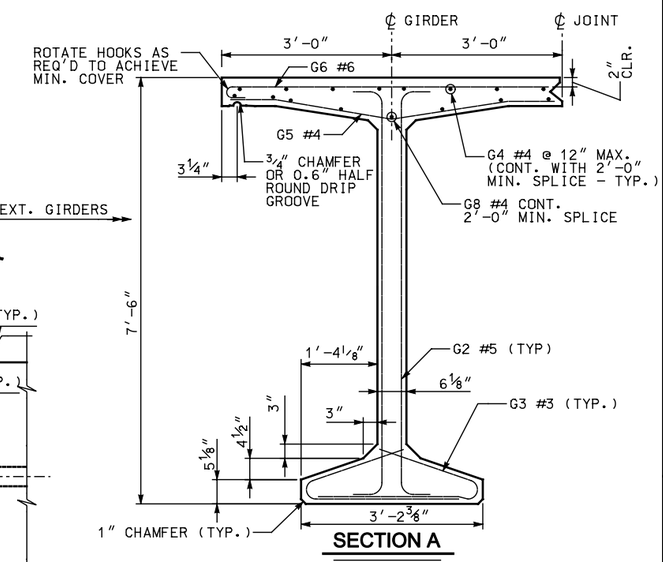

SECTION A

NOTE: TOP FLANGE DESIGNED FOR 42" SINGLE SLOPE CONCRETE PARAPET. PARAPET REINFORCING NOT SHOWN.

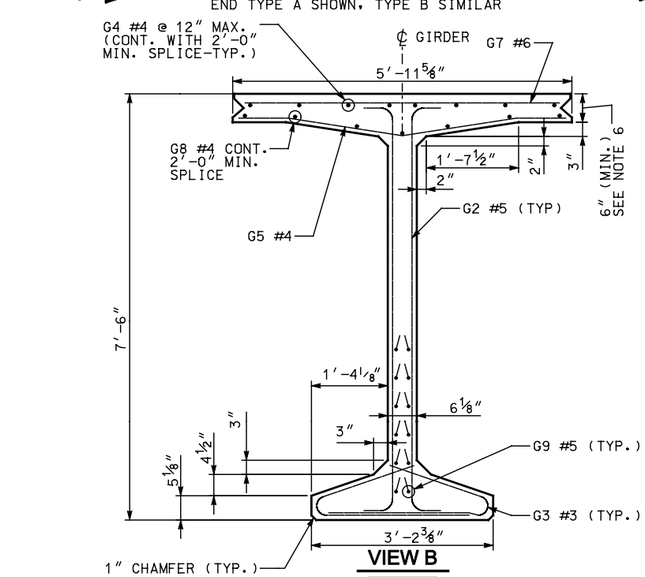

VIEW B

DIAPHRAGM TYPE	END TYPE	X
INTEGRAL ABUTMENT	A	
CANTILEVER ABUTMENT	B	0"

MARK	LOCATION	SIZE	BENDING DIAGRAM (ALL DIMENSIONS ARE OUT TO OUT)
G2	GIRDER STIRRUPS	5	
G3*	BOTTOM FLANGE TIES	3	
G4*	TOP OF TOP FLANGE - LONGIT.	4 STR.	
G5*	BOT. OF TOP FLANGE - TRANSV.	4 STR.	
G6*	TOP TRANSV. - EXT. GIRDER	6	
G7*	TOP TRANSV. - INT. GIRDER	6 STR.	
G8*	BOT. OF TOP FLANGE - LONGIT.	4 STR.	
G9	GIRDER LONGITUDINAL	5 STR.	

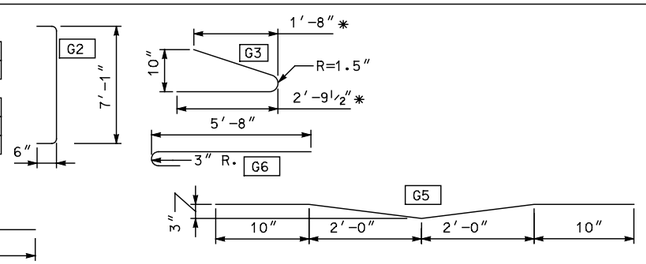

* = VARIES FOR SKEWED ENDS

NOTES

1. INCREASE PLAN LENGTH AS NECESSARY TO COMPENSATE FOR SHORTENING DUE TO PRESTRESS AND SHRINKAGE.
2. ALL PRETENSIONED AND TEMPORARY STRANDS TO BE [0.6" DIA.] LOW RELAXATION STRANDS (AASHTO M203 GRADE 270.)
3. FOR GIRDER ENDS REQUIRING BAR OR STRAND EXTENSION SEE SUPLEMENTAL DETAILS. FOR END TYPE 'B', CUT ALL STRANDS BELOW CONCRETE SURFACE AND GROUT WITH AN APPROVED EPOXY GROUT.
4. CONTRACTOR TO DESIGN AND INSTALL LIFTING EMBEDMENTS IN ACCORDANCE WITH THE STANDARD SPECIFICATIONS.
5. CAUTION TO BE EXERCISED IN HANDLING AND PLACING GIRDERS. ALL GIRDERS TO BE CHECKED BY THE CONTRACTOR TO ENSURE THAT THEY ARE BRACED ADEQUATELY TO PREVENT TIPPING AND TO CONTROL LATERAL BENDING DURING SHIPPING. ONCE ERECTED, ALL GIRDERS TO BE BRACED LATERALLY TO PREVENT TIPPING UNTIL THE DIAPHRAGMS HAVE BEEN INSTALLED.
6. THICKEN FLANGE TO COMPENSATE FOR CAMBER. SEE "GIRDER FLANGE THICKENING" DETAIL.
7. FOR DIAPHRAGM NOTES SEE SHEET BT-4.
8. DESIGN GIRDER STIRRUP SPACING IN THIS REGION.
9. SEE FRAMING PLAN FOR DIAPHRAGM LOCATIONS AND SEE DIAPHRAGM DETAILS FOR CONNECTION REQUIREMENTS.
10. FIELD BENDING MAY BE REQUIRED TO OBTAIN 1 1/2" CONCRETE COVER IN CLOSURE POUR.

NO.	DATE	BY	REMARKS

REVISIONS

UTAH DEPARTMENT OF TRANSPORTATION
SALT LAKE CITY, UTAH
STRUCTURES DIVISION

DESIGN CHECK
DRAWN CHECK
QUANT. CHECK

APPROVAL RECOMM. DATE SENIOR DESIGN ENGR.
APPROVED AS TO FORM BY UDOT DATE UDOT BRIDGE ENGR.

TYPICAL DETAIL SHEET
PRETENSIONED DECK BULB TEE
UDBT90 GIRDER DETAILS 1

PROJECT NUMBER

COUNTY

UDBT90 - 1
DRG. NO.

SHT. OF

UDBT90G1.dgn
7/8/2009

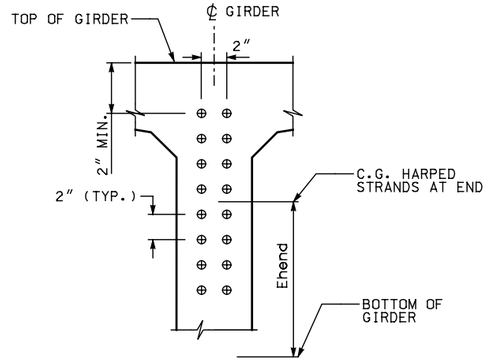

5 STRAND PATTERN AT GIRDER END

⊕ DENOTES HARPED STRAND

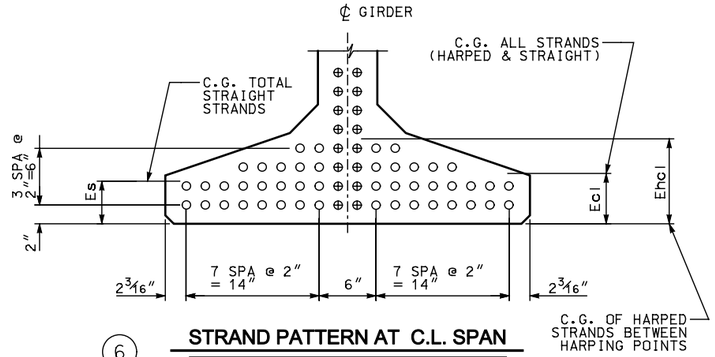

6 STRAND PATTERN AT C.L. SPAN

⊕ DENOTES HARPED STRAND

○ DENOTES STRAIGHT STRAND

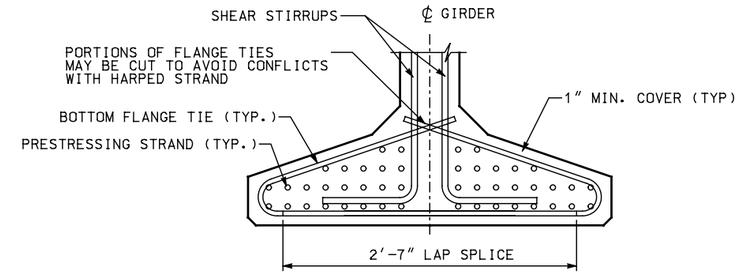

11 BOTTOM FLANGE REINFORCING

GIRDER END SHOWN, MIDDLE SECTION SIMILAR

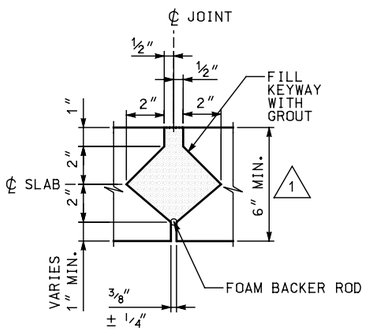

SECTION D

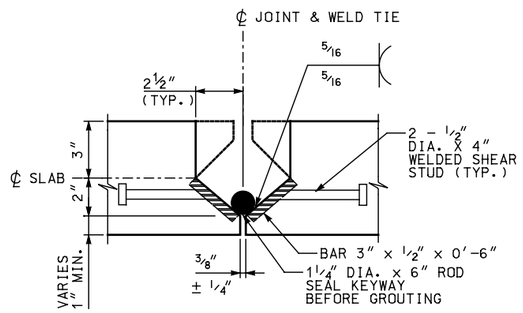

SECTION C

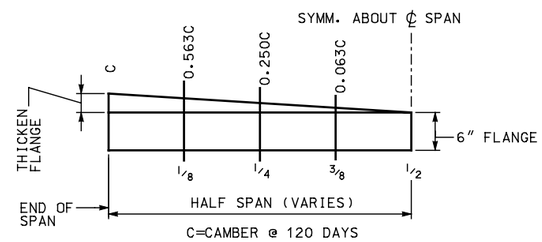

GIRDER FLANGE THICKENING **

** THICKEN FLANGE TO COMPENSATE FOR CAMBER DUE TO PRESTRESS. GIRDERS WITH FINAL CAMBER VALUES SMALLER THAN 3/4″ ARE EXEMPT FROM THIS REQUIREMENT. FLANGE THICKENING SHALL BE USED ONLY IF NEEDED BY DESIGN.

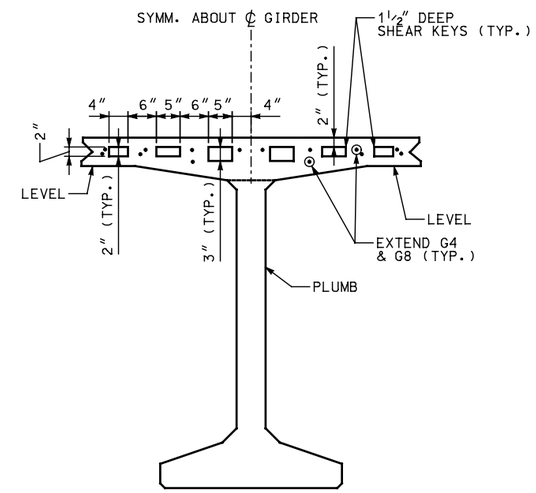

GIRDER END

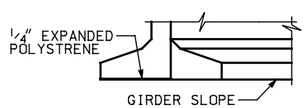

ELEVATION

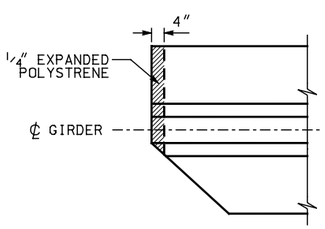

PLAN

10 BOTTOM FLANGE SPALL PROTECTION DETAIL

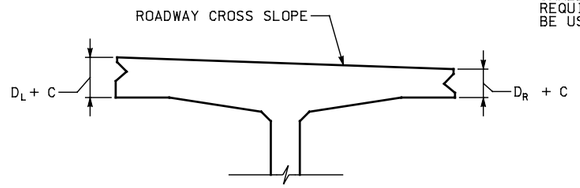

12 CROSS SLOPE DETAIL 1

NOTE: ADJUST D_L AND D_R TO PROVIDE ROADWAY CROSS SLOPE (6″ MIN.)

GIRDER SCHEDULE

SPAN	GIRDER	THETA 1 DEG. (3)	THETA 2 DEG. (3)	PLAN LENGTH (ALONG GIRDER GRADE)	MIN. CONC. COMPR. STRENGTH		HARPED*		STRAIGHT		LOCATION OF C.G. STRANDS				CAMBER = C			TOP FLANGE CROSS SLOPE	
					F'CI KSI	F'C KSI	NO. OF STRANDS	JACKING FORCE (KIPS)	NO. OF STRANDS	JACKING FORCE (KIPS)	Ecl (6)	Es (6)	Ehcl (6)	Ehend (5)	RELEASE △	30 △	120 △	D_L (12)	D_R (12)
-	-	-	-		-	-	-	-	-	-	-	-	-	-	-	-	-	-	-
-	-	-	-		-	-	-	-	-	-	-	-	-	-	-	-	-	-	-
-	-	-	-		-	-	-	-	-	-	-	-	-	-	-	-	-	-	-
-	-	-	-		-	-	-	-	-	-	-	-	-	-	-	-	-	-	-

1

* THE NUMBER OF HARPED STRANDS SHOULD NOT EXCEED 1/2 OF THE NUMBER OF STRAIGHT STRANDS.

NOTE:
DIMENSIONS SHALL BE SHOWN IN US CUSTOMARY UNITS TO THE NEAREST 1/8 INCH.

NO.	DATE	BY	REMARKS
1	08/18/09	MPC	MODIFIED CALLOUTS FOR TOP FLANGE THICKNESS. ADDED DL AND DR VALUES TO SCHEDULE

REVISIONS

UTAH DEPARTMENT OF TRANSPORTATION
SALT LAKE CITY, UTAH
STRUCTURES DIVISION

DESIGN — CHECK
DRAWN — CHECK
QUANT. — CHECK
SENIOR DESIGN ENGR. — APPROVAL RECOMM. — DATE
UDOT BRIDGE ENGR. — APPROVED FOR USE BY UDOT — DATE

TYPICAL DETAIL SHEET
PRETENSIONED DECK BULB TEE
UDBT90 GIRDER DETAILS 2

PROJECT NUMBER

COUNTY
UDBT90-2
DRG. NO.
SHT. OF

UDBT90G2.dgn
7/8/2009

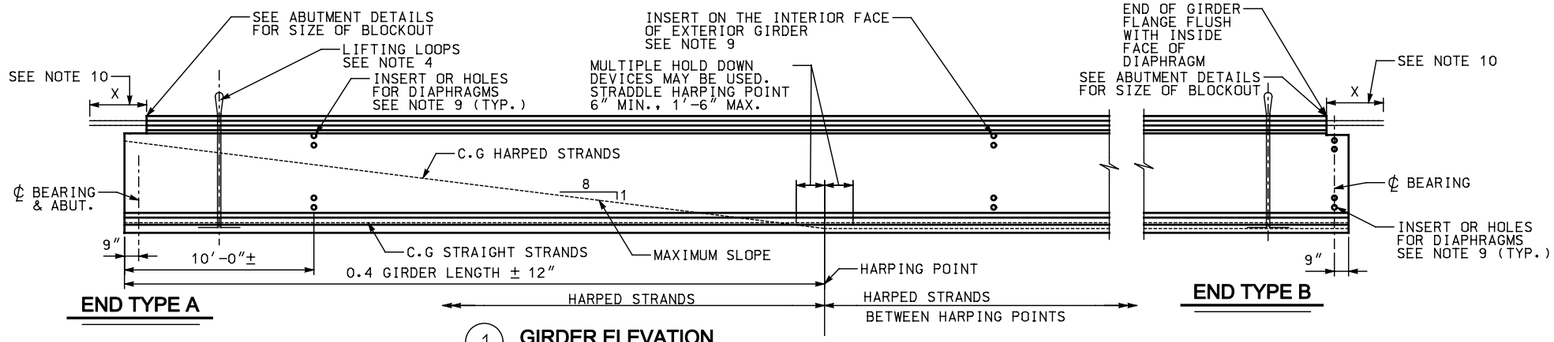

1 GIRDER ELEVATION

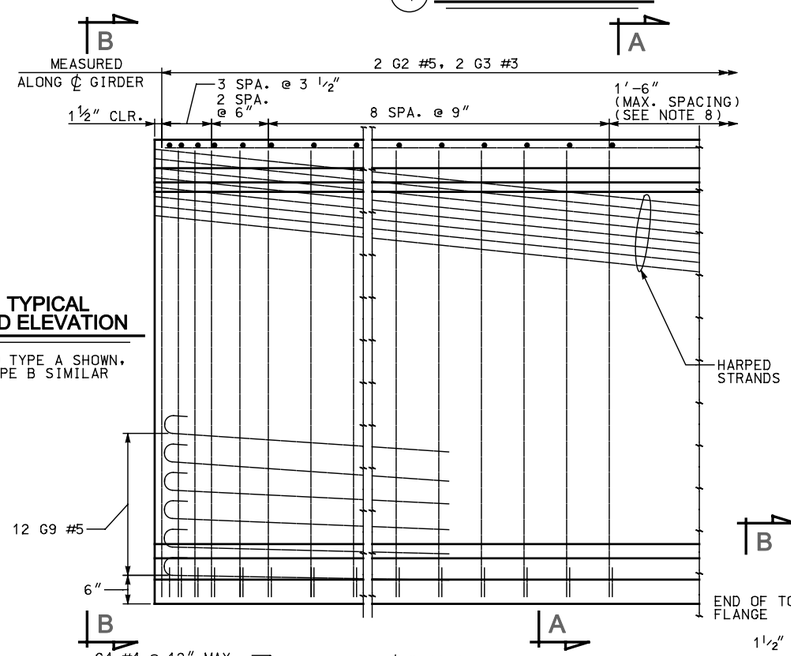

TYPICAL END ELEVATION

END TYPE A SHOWN, TYPE B SIMILAR

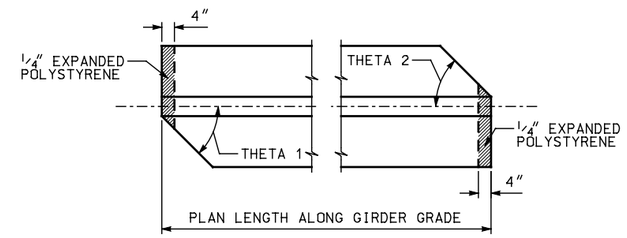

3 SKEWED END DETAILS

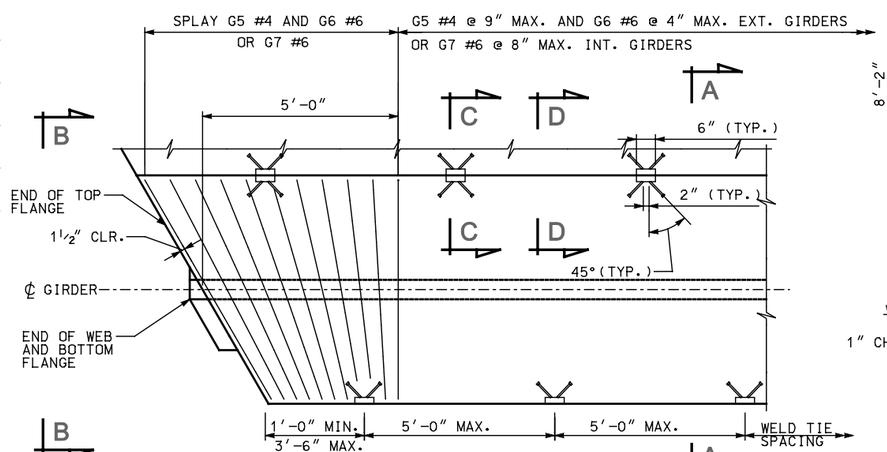

GIRDER PLAN

OMIT WELD TIES ON EXTERIOR EDGE OF EXTERIOR GIRDER. (STRANDS AND LONGITUDINAL BARS NOT SHOWN)

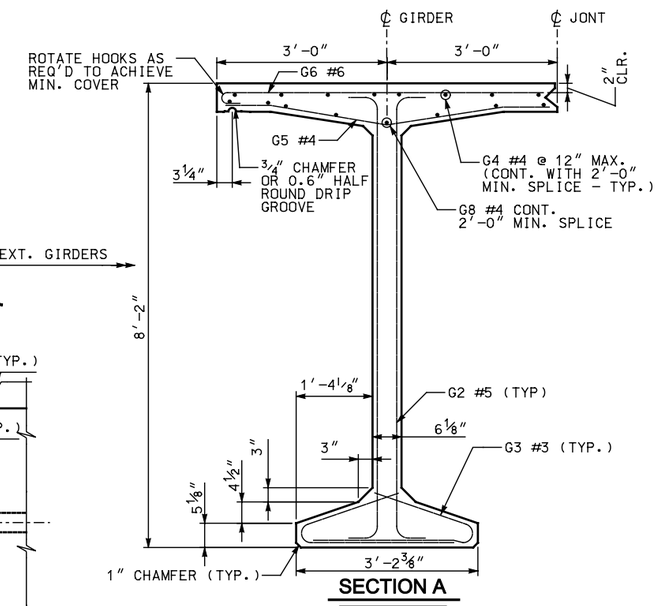

SECTION A

NOTE: TOP FLANGE DESIGNED FOR 42" SINGLE SLOPE CONCRETE PARAPET. PARAPET REINFORCING NOT SHOWN.

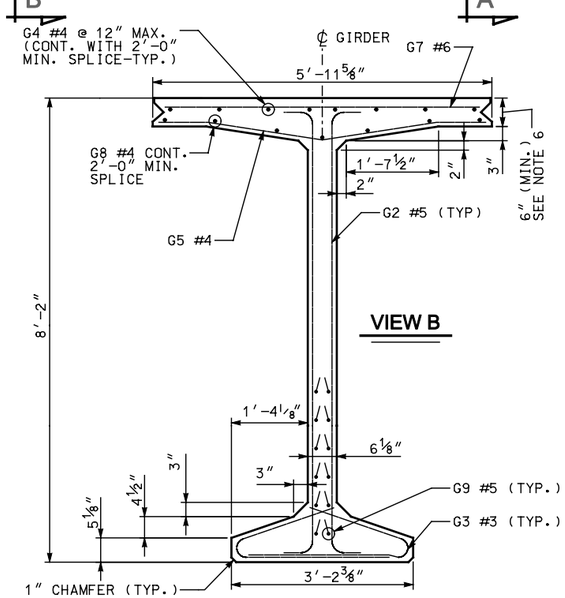

VIEW B

NOTES

1. INCREASE PLAN LENGTH AS NECESSARY TO COMPENSATE FOR SHORTENING DUE TO PRESTRESS AND SHRINKAGE.
2. ALL PRETENSIONED AND TEMPORARY STRANDS TO BE [0.6" DIA.] LOW RELAXATION STRANDS (AASHTO M203 GRADE 270.)
3. FOR GIRDER ENDS REQUIRING BAR OR STRAND EXTENSION SEE SUPLEMENTAL DETAILS. FOR END TYPE 'B', CUT ALL STRANDS BELOW CONCRETE SURFACE AND GROUT WITH AN APPROVED EPOXY GROUT.
4. CONTRACTOR TO DESIGN AND INSTALL LIFTING EMBEDMENTS IN ACCORDANCE WITH THE STANDARD SPECIFICATIONS.
5. CAUTION TO BE EXERCISED IN HANDLING AND PLACING GIRDERS. ALL GIRDERS TO BE CHECKED BY THE CONTRACTOR TO ENSURE THAT THEY ARE BRACED ADEQUATELY TO PREVENT TIPPING AND TO CONTROL LATERAL BENDING DURING SHIPPING. ONCE ERECTED, ALL GIRDERS TO BE BRACED LATERALLY TO PREVENT TIPPING UNTIL THE DIAPHRAGMS HAVE BEEN INSTALLED.
6. THICKEN FLANGE TO COMPENSATE FOR CAMBER. SEE "GIRDER FLANGE THICKENING" DETAIL.
7. FOR DIAPHRAGM NOTES SEE SHEET BT-4.
8. DESIGN GIRDER STIRRUP SPACING IN THIS REGION.
9. SEE FRAMING PLAN FOR DIAPHRAGM LOCATIONS AND SEE DIAPHRAGM DETAILS FOR CONNECTION REQUIREMENTS.
10. FIELD BENDING MAY BE REQUIRED TO OBTAIN 1 1/2" CONCRETE COVER IN CLOSURE POUR.

DIAPHRAGM TYPE	END TYPE	X
INTEGRAL ABUTMENT	A	
CANTILEVER ABUTMENT	B	0"

MARK	LOCATION	SIZE	BENDING DIAGRAM (ALL DIMENSIONS ARE OUT TO OUT)
G2	GIRDER STIRRUPS	5	
G3*	BOTTOM FLANGE TIES	3	
G4*	TOP OF TOP FLANGE - LONGIT.	4 STR.	
G5*	BOT. OF TOP FLANGE - TRANSV.	4 STR.	
G6*	TOP TRANSV. - EXT. GIRDER	6	
G7*	TOP TRANSV. - INT. GIRDER	6 STR.	
G8*	BOT. OF TOP FLANGE - LONGIT.	4 STR.	
G9	GIRDER LONGITUDINAL	5 STR.	

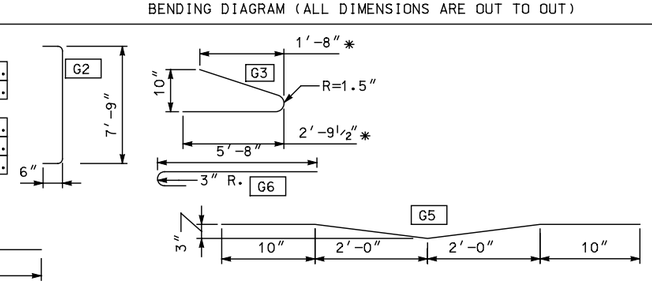

* = VARIES FOR SKEWED ENDS

NO.	DATE	BY	REMARKS

REVISIONS

UTAH DEPARTMENT OF TRANSPORTATION
SALT LAKE CITY, UTAH
STRUCTURES DIVISION

DESIGN — CHECK
DRAWN — CHECK
QUANT. — CHECK

APPROVAL RECOMM. — DATE — SENIOR DESIGN ENGR.
APPROVED FOR USE BY UDOT — DATE — UDOT BRIDGE ENGR.

TYPICAL DETAIL SHEET
PRETENSIONED DECK BULB TEE
UDBT98 GIRDER DETAILS 1

PROJECT NUMBER

COUNTY

UDBT98 - 1
DRG. NO.

SHT. OF

UDBT98G1.dgn
7/8/2009

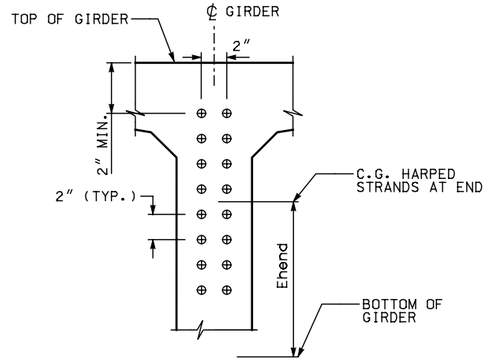

5 STRAND PATTERN AT GIRDER END

⊕ DENOTES HARPED STRAND

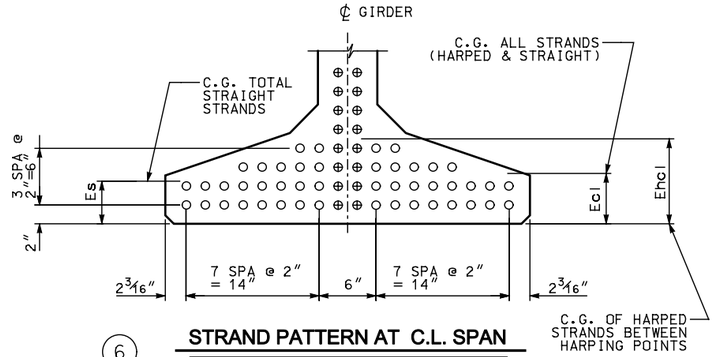

6 STRAND PATTERN AT C.L. SPAN

⊕ DENOTES HARPED STRAND

○ DENOTES STRAIGHT STRAND

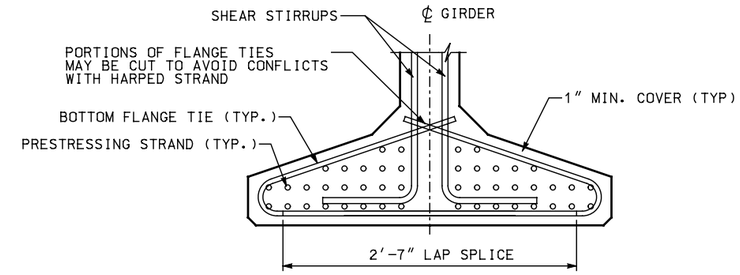

11 BOTTOM FLANGE REINFORCING

GIRDER END SHOWN, MIDDLE SECTION SIMILAR

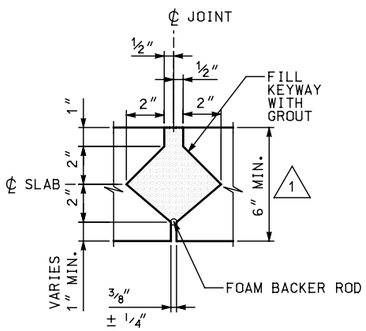

SECTION D

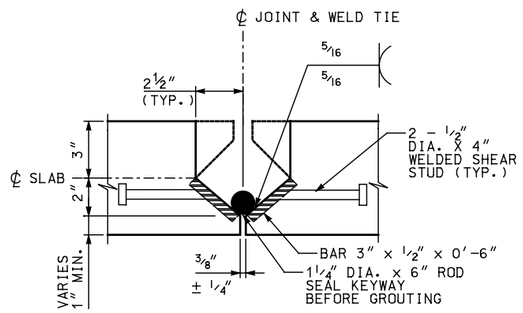

SECTION C

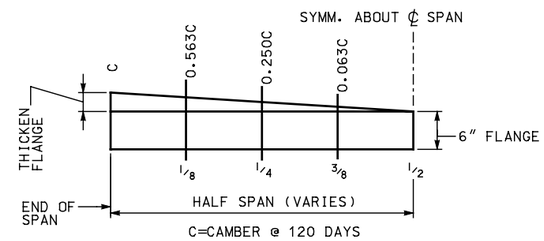

GIRDER FLANGE THICKENING **

** THICKEN FLANGE TO COMPENSATE FOR CAMBER DUE TO PRESTRESS. GIRDERS WITH FINAL CAMBER VALUES SMALLER THAN 3/4″ ARE EXEMPT FROM THIS REQUIREMENT. FLANGE THICKENING SHALL BE USED ONLY IF NEEDED BY DESIGN.

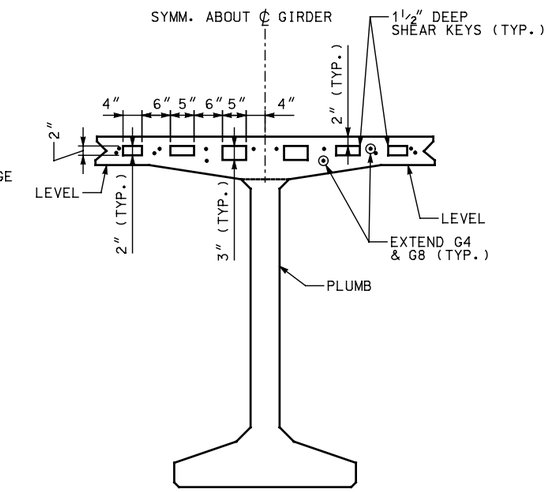

GIRDER END

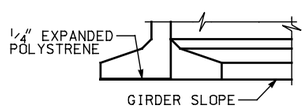

ELEVATION

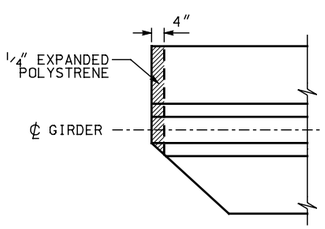

PLAN

10 BOTTOM FLANGE SPALL PROTECTION DETAIL

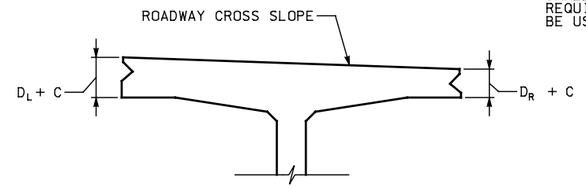

12 CROSS SLOPE DETAIL 1

NOTE: ADJUST D_L AND D_R TO PROVIDE ROADWAY CROSS SLOPE (6″ MIN.)

GIRDER SCHEDULE

SPAN	GIRDER	THETA 1 DEG. (3)	THETA 2 DEG. (3)	PLAN LENGTH (ALONG GIRDER GRADE)	MIN. CONC. COMPR. STRENGTH		HARPED*		STRAIGHT		LOCATION OF C.G. STRANDS				CAMBER = C			TOP FLANGE CROSS SLOPE	
					F'CI KSI	F'C KSI	NO. OF STRANDS	JACKING FORCE (KIPS)	NO. OF STRANDS	JACKING FORCE (KIPS)	Ecl (6)	Es (6)	Ehcl (6)	Ehend (5)	RELEASE △	30 △	120 △	D_L (12)	D_R (12)
-	-	-	-		-	-	-	-	-	-	-	-	-	-	-	-	-	-	-
-	-	-	-		-	-	-	-	-	-	-	-	-	-	-	-	-	-	-
-	-	-	-		-	-	-	-	-	-	-	-	-	-	-	-	-	-	-
-	-	-	-		-	-	-	-	-	-	-	-	-	-	-	-	-	-	-

1

* THE NUMBER OF HARPED STRANDS SHOULD NOT EXCEED 1/2 OF THE NUMBER OF STRAIGHT STRANDS.

NOTE:
DIMENSIONS SHALL BE SHOWN IN US CUSTOMARY UNITS TO THE NEAREST 1/8 INCH.

NO.	DATE	BY	REMARKS
1	08/18/09	MPC	MODIFIED CALLOUTS FOR TOP FLANGE THICKNESS. ADDED DL AND DR VALUES TO SCHEDULE

REVISIONS

UTAH DEPARTMENT OF TRANSPORTATION
SALT LAKE CITY, UTAH
STRUCTURES DIVISION

DESIGN — CHECK
DRAWN — CHECK
QUANT. — CHECK
APPROVAL RECOMM. — DATE — SENIOR DESIGN ENGR.
APPROVED FOR USE BY UDOT — DATE — UDOT BRIDGE ENGR.

TYPICAL DETAIL SHEET
PRETENSIONED DECK BULB TEE
UDBT98 GIRDER DETAILS 2

PROJECT NUMBER

COUNTY
UDBT98-2
DRG. NO.
SHT. OF

UDBT98c2.dgn
7/8/2009