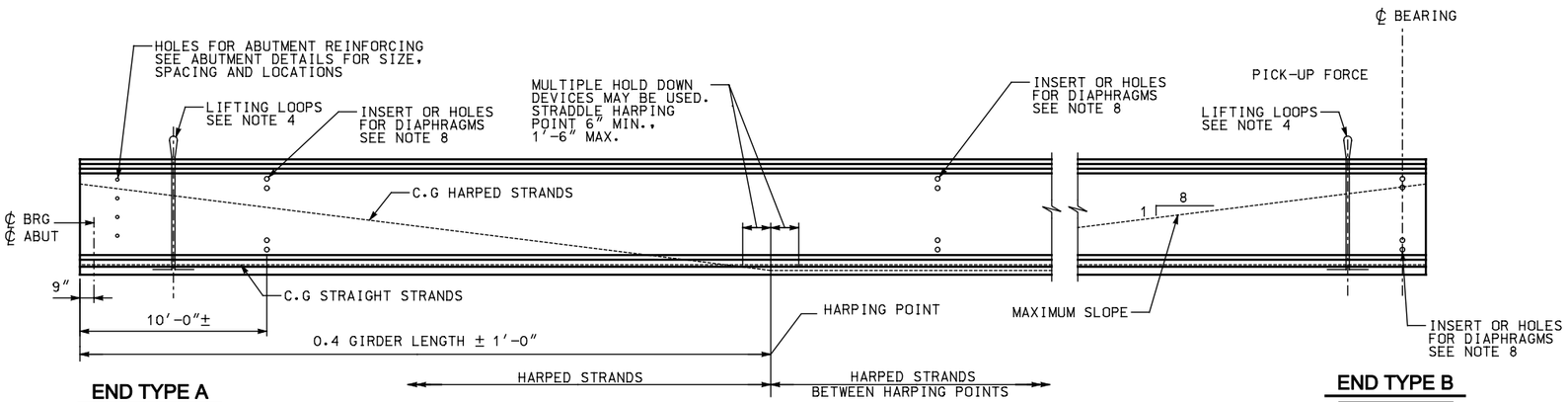

GIRDER ELEVATION

NOTES

1. INCREASE PLAN LENGTH AS NECESSARY TO COMPENSATE FOR SHORTENING DUE TO PRESTRESS AND SHRINKAGE.
2. ALL PRETENSIONED AND TEMPORARY STRANDS TO BE [0.6" DIA.] LOW RELAXATION STRANDS (AASHTO M203 GRADE 270.)
3. FOR GIRDER ENDS REQUIRING BAR OR STRAND EXTENSION SEE SUPPLEMENTAL DETAILS. FOR END TYPE 'B', CUT ALL STRANDS BELOW CONCRETE SURFACE AND GROUT WITH AN APPROVED EPOXY GROUT.
4. CONTRACTOR TO DESIGN AND INSTALL LIFTING EMBEDMENTS IN ACCORDANCE WITH THE STANDARD SPECIFICATIONS.
5. CAUTION TO BE EXERCISED IN HANDLING AND PLACING GIRDERS. ALL GIRDERS TO BE CHECKED BY THE CONTRACTOR TO ENSURE THAT THEY ARE BRACED ADEQUATELY TO PREVENT TIPPING AND TO CONTROL LATERAL BENDING DURING SHIPPING. ONCE ERECTED, ALL GIRDERS TO BE BRACED LATERALLY TO PREVENT TIPPING UNTIL THE DIAPHRAGMS HAVE BEEN INSTALLED.
6. FOR DIAPHRAGM NOTES SEE SHEET BT-4.
7. DESIGN GIRDER STIRRUP SPACING IN THIS REGION.
8. SEE FRAMING PLAN FOR DIAPHRAGM LOCATIONS AND SEE DIAPHRAGM DETAILS FOR CONNECTION REQUIREMENTS.
9. DESIGN SLAB STIRRUPS BASED ON DECK AND SHEAR CONNECTOR SELECTED.

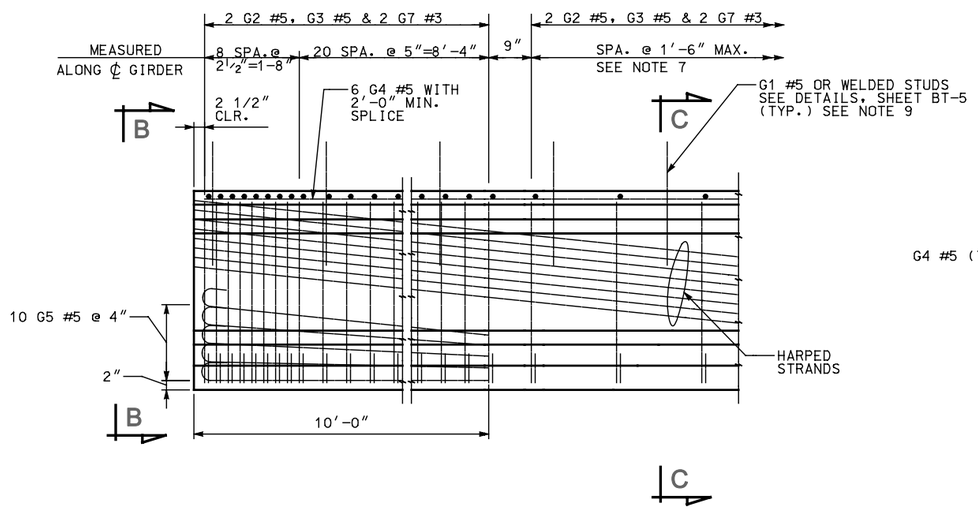

2 **TYPICAL END ELEVATION**

END TYPE A SHOWN, TYPE B SIMILAR

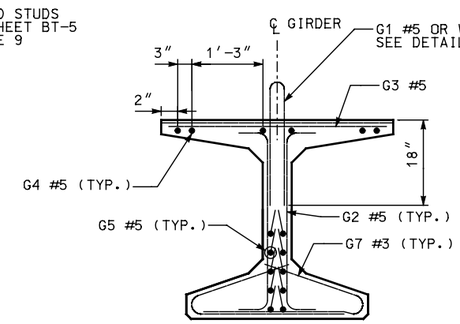

3 **VIEW B**

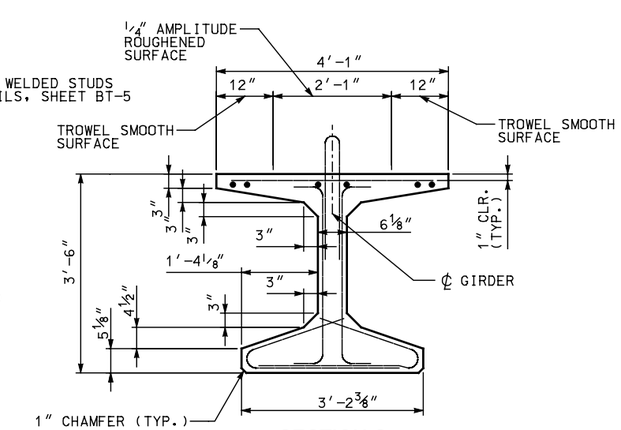

4 **SECTION C**

DIAPHRAGM TYPE	END TYPE
INTEGRAL ABUTMENT	A
CANTILEVER ABUTMENT	B

MARK	LOCATION	SIZE	BENDING DIAGRAM (ALL DIMENSIONS ARE OUT TO OUT)
G1	SLAB STIRRUP	5	NOTE: FOR DIMENSION "A", SEE "DECK OFFSETS"
G2	GIRDER STIRRUPS	5	
G3✱	GIRDER TOP FLANGE	5	STR.
G4	GIRDER LONGIT. FULL LENGTH	5	STR.
G5	GIRDER LONGITUDINAL	5	
G7✱	GIRDER BOT. FLANGE TIES	3	

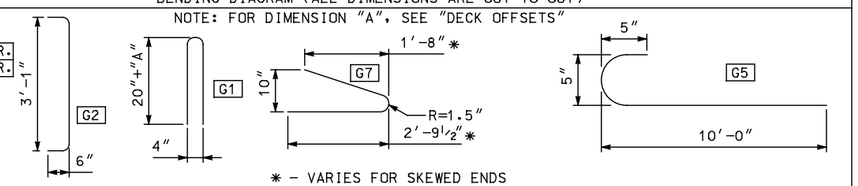

✱ - VARIES FOR SKEWED ENDS

UTAH DEPARTMENT OF TRANSPORTATION
SALT LAKE CITY, UTAH
STRUCTURES DIVISION

DESIGN | CHECK
DRAWN | CHECK
QUANT. | CHECK

APPROVAL RECOMM. | DATE | SENIOR DESIGN ENGR.
APPROVED FOR USE BY UDOT | DATE | UDOT BRIDGE ENGR.

TYPICAL DETAIL SHEET
PRETENSIONED BULB TEE GIRDER
UBT42 GIRDER DETAILS 1

PROJECT NUMBER

NO.	DATE	BY	REMARKS

REVISIONS

COUNTY

UBT42 - 1
DRG. NO.

SHT. OF

UBT42G31.dgn
4/30/2009

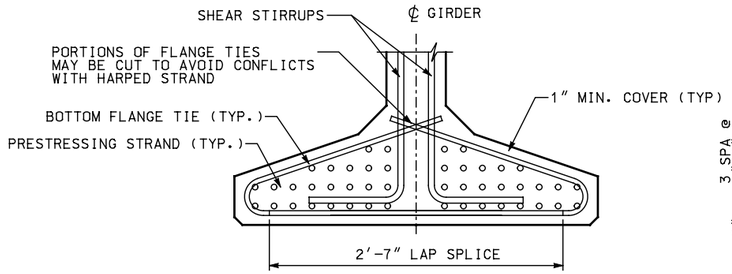

8 **BOTTOM FLANGE REINFORCING**

GIRDER END SHOWN, MIDDLE SECTION SIMILAR

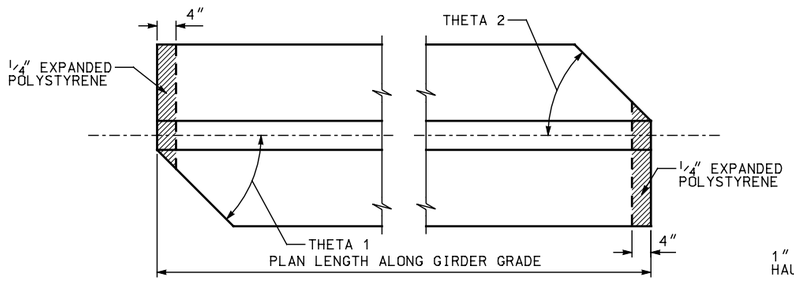

END 1 PLAN END 2

9 **SKEWED END DETAILS**

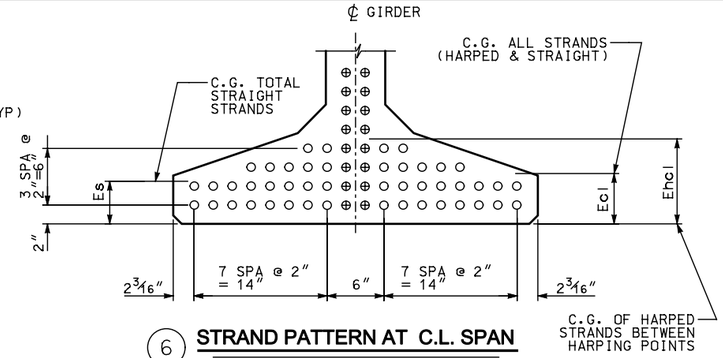

6 **STRAND PATTERN AT C.L. SPAN**

⊕ DENOTES HARPED STRAND

○ DENOTES STRAIGHT STRAND

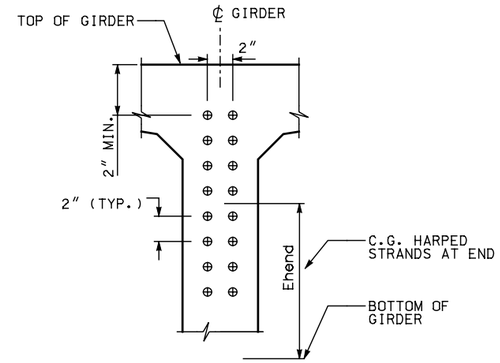

5 **STRAND PATTERN AT GIRDER END**

⊕ DENOTES HARPED STRAND

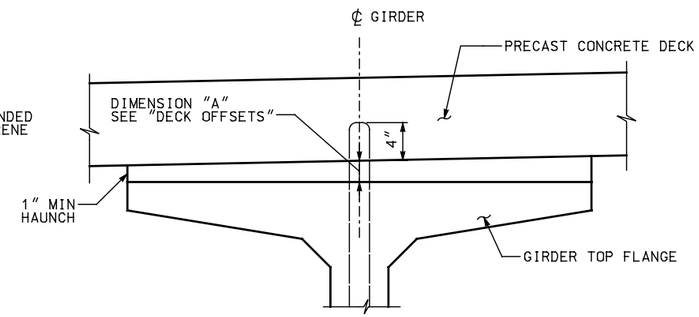

12 **DECK SECTION AT GIRDER ENDS**

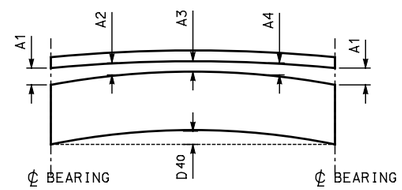

HAUNCH DIAGRAM

NOTE: "A" DIMENSIONS BASED ON GIRDER DEFLECTIONS EQUAL TO "D40" AT TIME OF SLAB PLACEMENT (40 DAYS)

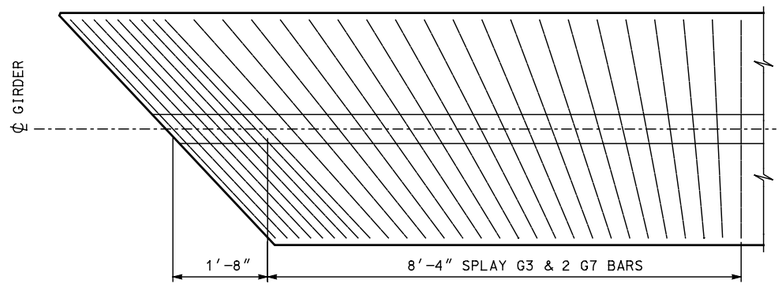

11 **TRANSVERSE REINFORCING SKEWED ENDS**

ONLY TRANSVERSE REINF. SHOWN

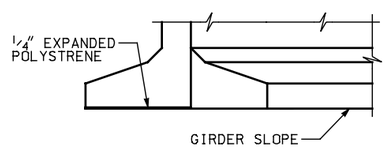

ELEVATION

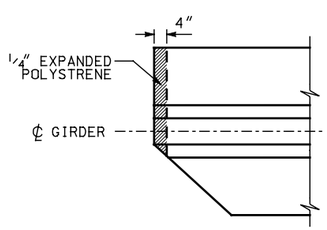

PLAN

10 **BOTTOM FLANGE SPALL PROTECTION DETAIL**

GIRDER SCHEDULE

SPAN	GIRDER	END TYPE	SHEAR CONN. TYPE W = WELDED STUD R = REINFORCING	(THETA) 1 (DEG.) ⑨	(THETA) 2 (DEG.) ⑨	PLAN LENGTH (ALONG GIRDER GRADE)	MIN. CONC. COMPR. STRENGTH F'CI KSI	MIN. CONC. COMPR. STRENGTH F'C KSI	HARPED NO. OF STRANDS	HARPED JACKING FORCE (KIPS)	STRAIGHT NO. OF STRANDS	STRAIGHT JACKING FORCE (KIPS)	LOCATION OF C.G. STRANDS Ecl ⑥	LOCATION OF C.G. STRANDS Es ⑥	LOCATION OF C.G. STRANDS Ehcl ⑥	LOCATION OF C.G. STRANDS Ehend ⑤	CAMBER D DR △	CAMBER D D40 △	CAMBER D DF △	DECK OFFSETS A1	DECK OFFSETS A2	DECK OFFSETS A3	DECK OFFSETS A4
-	-	-	-	-	-	-	-	-	-	-	-	-	-	-	-	-	-	-	-	-	-	-	-
-	-	-	-	-	-	-	-	-	-	-	-	-	-	-	-	-	-	-	-	-	-	-	-
-	-	-	-	-	-	-	-	-	-	-	-	-	-	-	-	-	-	-	-	-	-	-	-
-	-	-	-	-	-	-	-	-	-	-	-	-	-	-	-	-	-	-	-	-	-	-	-

NOTES: SHOW DIMENSIONS IN U.S. CUSTOMARY UNITS TO THE NEAREST 1/8 TH INCH.
THE NUMBER OF HARPED STRANDS SHOULD NOT EXCEED 1/2 OF NUMBER OF STRAIGHT STRANDS.

CAMBER NOTES: DR= CAMBER AT RELEASE
D40= CAMBER AT 40 DAYS (DECK CASTING)
DF= CAMBER INCLUDING ALL DL AT 120 DAYS

NO.	DATE	BY	REMARKS

REVISIONS

UTAH DEPARTMENT OF TRANSPORTATION
SALT LAKE CITY, UTAH
STRUCTURES DIVISION

DESIGN CHECK
DRAWN CHECK
QUANT. CHECK

APPROVAL RECOMM. DATE SENIOR DESIGN ENGR.
APPROVED FOR USE BY UDOT DATE UDOT BRIDGE ENGR.

TYPICAL DETAIL SHEET
PRETENSIONED BULB TEE GIRDER
UBT42 GIRDER DETAILS 2

PROJECT NUMBER

COUNTY

UBT42 - 2
DRG. NO.

SHT. OF

UBT42G2.dgn

4/30/2009

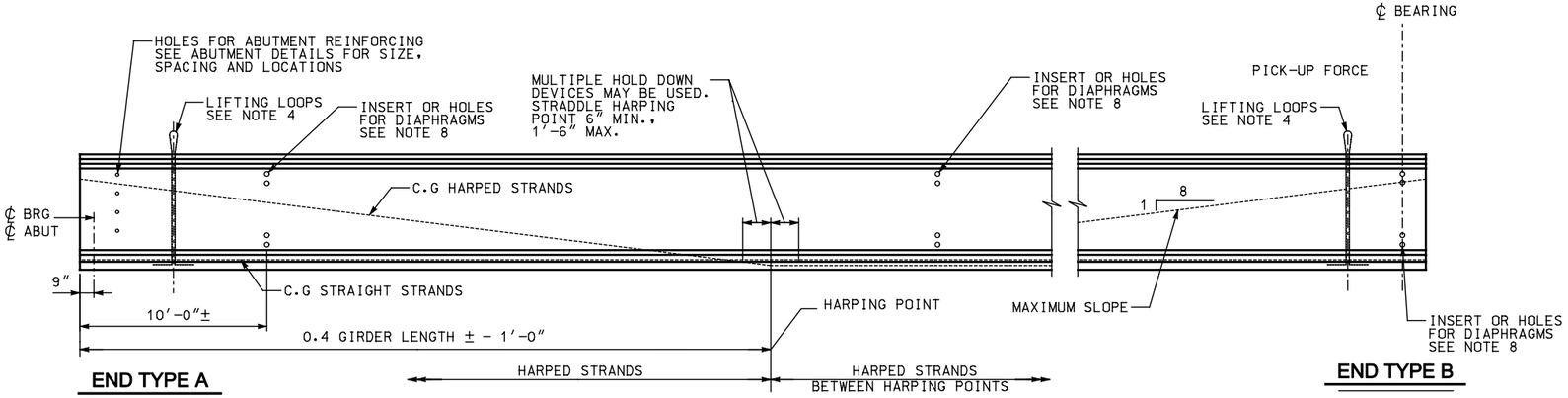

GIRDER ELEVATION

NOTES

1. INCREASE PLAN LENGTH AS NECESSARY TO COMPENSATE FOR SHORTENING DUE TO PRESTRESS AND SHRINKAGE.
2. ALL PRETENSIONED AND TEMPORARY STRANDS TO BE [0.6" DIA.] LOW RELAXATION STRANDS (AASHTO M203 GRADE 270.)
3. FOR GIRDER ENDS REQUIRING BAR OR STRAND EXTENSION SEE SUPPLEMENTAL DETAILS. FOR END TYPE 'B', CUT ALL STRANDS BELOW CONCRETE SURFACE AND GROUT WITH AN APPROVED EPOXY GROUT.
4. CONTRACTOR TO DESIGN AND INSTALL LIFTING EMBEDMENTS IN ACCORDANCE WITH THE STANDARD SPECIFICATIONS.
5. CAUTION TO BE EXERCISED IN HANDLING AND PLACING GIRDERS. ALL GIRDERS TO BE CHECKED BY THE CONTRACTOR TO ENSURE THAT THEY ARE BRACED ADEQUATELY TO PREVENT TIPPING AND TO CONTROL LATERAL BENDING DURING SHIPPING. ONCE ERECTED, ALL GIRDERS TO BE BRACED LATERALLY TO PREVENT TIPPING UNTIL THE DIAPHRAGMS HAVE BEEN INSTALLED.
6. FOR DIAPHRAGM NOTES SEE SHEET BT-4.
7. DESIGN GIRDER STIRRUP SPACING IN THIS REGION.
8. SEE FRAMING PLAN FOR DIAPHRAGM LOCATIONS AND SEE DIAPHRAGM DETAILS FOR CONNECTION REQUIREMENTS.
9. DESIGN SLAB STIRRUPS BASED ON DECK AND SHEAR CONNECTOR SELECTED.

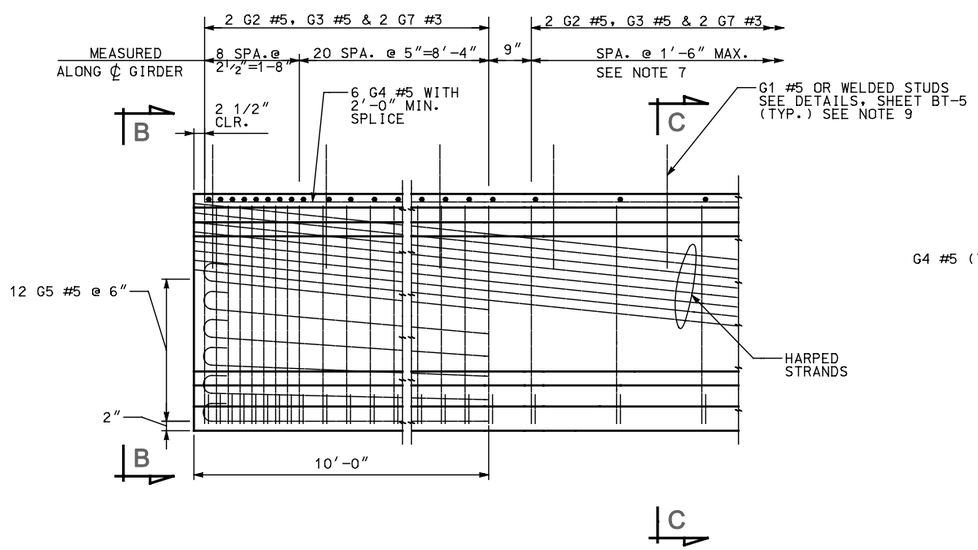

TYPICAL END ELEVATION

2

END TYPE A SHOWN, TYPE B SIMILAR

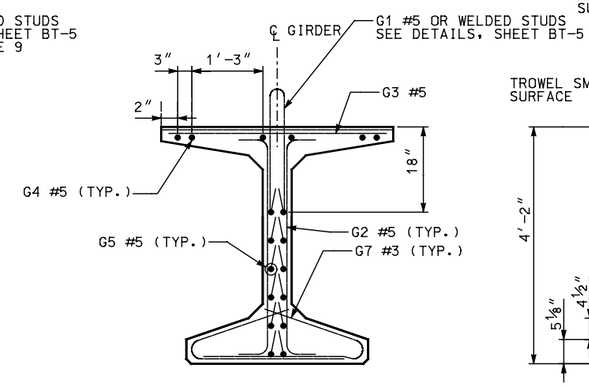

3 **VIEW B**

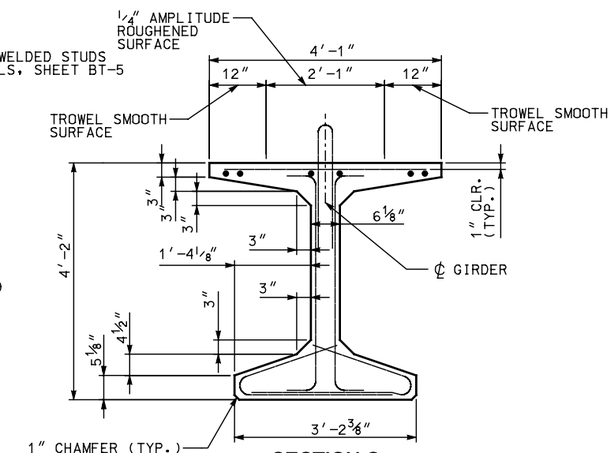

4 **SECTION C**

DIAPHRAGM TYPE	END TYPE
INTEGRAL ABUTMENT	A
CANTILEVER ABUTMENT	B

MARK	LOCATION	SIZE	
G1	SLAB STIRRUP	5	
G2	GIRDER STIRRUPS	5	
G3*	GIRDER TOP FLANGE	5	STR.
G4	GIRDER LONGIT. FULL LENGTH	5	STR.
G5	GIRDER LONGITUDINAL	5	
G7*	GIRDER BOT. FLANGE TIES	3	

BENDING DIAGRAM (ALL DIMENSIONS ARE OUT TO OUT)

NOTE: FOR DIMENSION "A", SEE "DECK OFFSETS"

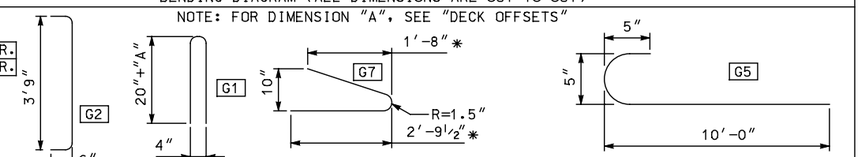

* - VARIES FOR SKEWED ENDS

NO.	DATE	BY	REMARKS

REVISIONS

UTAH DEPARTMENT OF TRANSPORTATION
SALT LAKE CITY, UTAH
STRUCTURES DIVISION

DESIGN — CHECK
DRAWN — CHECK
QUANT. — CHECK

APPROVAL RECOMM. — DATE — SENIOR DESIGN ENGR.
APPROVED FOR USE BY UDOT — DATE — UDOT BRIDGE ENGR.

TYPICAL DETAIL SHEET
PRETENSIONED BULB TEE GIRDER
UBT50 GIRDER DETAILS 1

PROJECT NUMBER

COUNTY

UBT50 - 1
DRG. NO.

SHT. OF

UBT50G1.dgn
4/30/2009

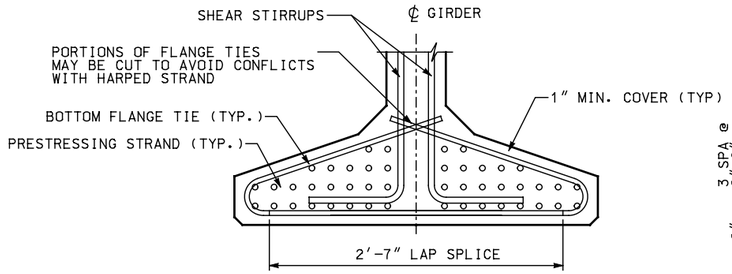

8 **BOTTOM FLANGE REINFORCING**

GIRDER END SHOWN, MIDDLE SECTION SIMILAR

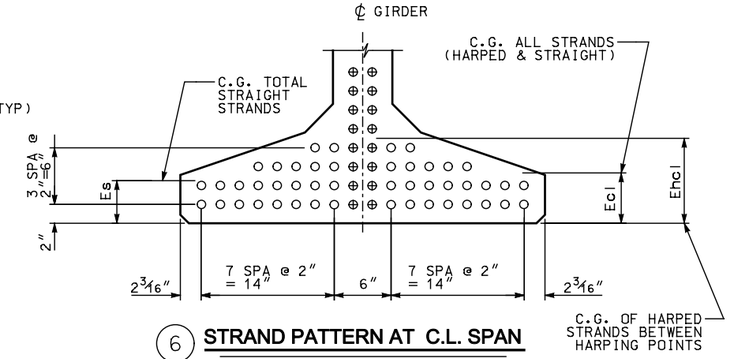

6 **STRAND PATTERN AT C.L. SPAN**

⊕ DENOTES HARPED STRAND

○ DENOTES STRAIGHT STRAND

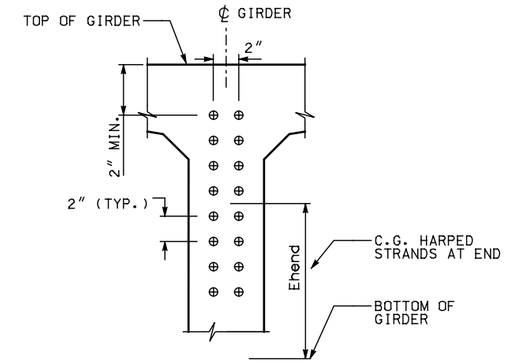

5 **STRAND PATTERN AT GIRDER END**

⊕ DENOTES HARPED STRAND

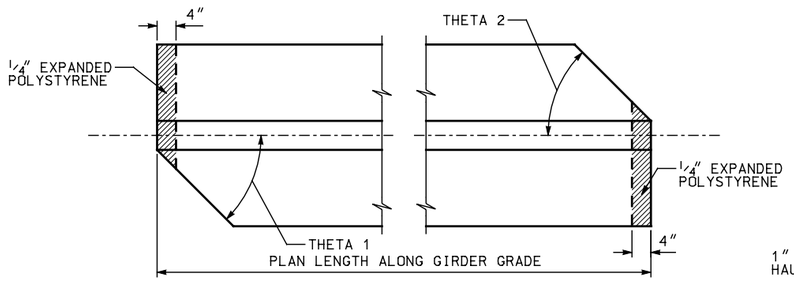

9 **SKEWED END DETAILS**

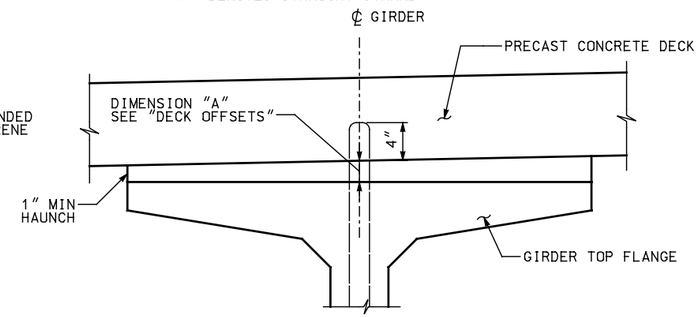

12 **DECK SECTION AT GIRDER ENDS**

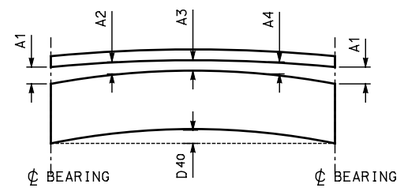

HAUNCH DIAGRAM

NOTE: "A" DIMENSIONS BASED ON GIRDER DEFLECTIONS EQUAL TO "D40" AT TIME OF SLAB PLACEMENT (40 DAYS)

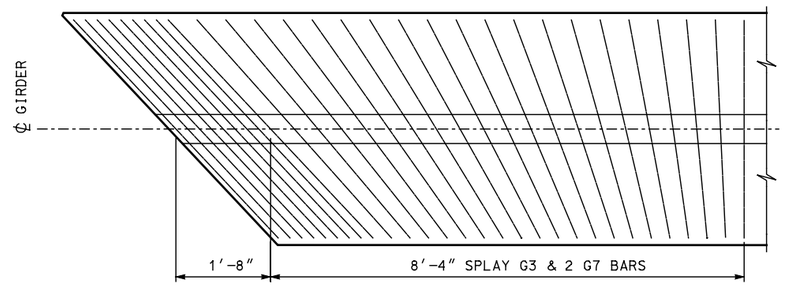

11 **TRANSVERSE REINFORCING SKEWED ENDS**

ONLY TRANSVERSE REINF. SHOWN

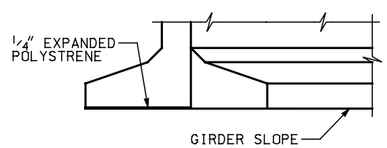

ELEVATION

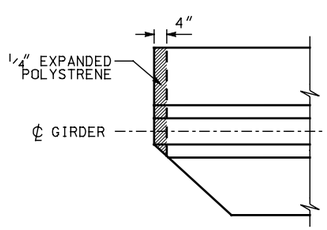

PLAN

10 **BOTTOM FLANGE SPALL PROTECTION DETAIL**

GIRDER SCHEDULE

SPAN	GIRDER	END TYPE	SHEAR CONN. TYPE W = WELDED STUD R = REINFORCING	(THETA) 1 (DEG.) ⑨	(THETA) 2 (DEG.) ⑨	PLAN LENGTH (ALONG GIRDER GRADE)	MIN. CONC. COMPR. STRENGTH F'CI KSI	MIN. CONC. COMPR. STRENGTH F'C KSI	HARPED NO. OF STRANDS	HARPED JACKING FORCE (KIPS)	STRAIGHT NO. OF STRANDS	STRAIGHT JACKING FORCE (KIPS)	LOCATION OF C.G. STRANDS Ecl ⑥	LOCATION OF C.G. STRANDS Es ⑥	LOCATION OF C.G. STRANDS Ehcl ⑥	LOCATION OF C.G. STRANDS Ehend ⑤	CAMBER D DR △	CAMBER D D40 △	CAMBER D DF △	DECK OFFSETS A1	DECK OFFSETS A2	DECK OFFSETS A3	DECK OFFSETS A4
-	-	-	-	-	-	-	-	-	-	-	-	-	-	-	-	-	-	-	-	-	-	-	-
-	-	-	-	-	-	-	-	-	-	-	-	-	-	-	-	-	-	-	-	-	-	-	-
-	-	-	-	-	-	-	-	-	-	-	-	-	-	-	-	-	-	-	-	-	-	-	-
-	-	-	-	-	-	-	-	-	-	-	-	-	-	-	-	-	-	-	-	-	-	-	-

NOTES: SHOW DIMENSIONS IN U.S. CUSTOMARY UNITS TO THE NEAREST 1/8 TH INCH.
THE NUMBER OF HARPED STRANDS SHOULD NOT EXCEED 1/2 OF NUMBER OF STRAIGHT STRANDS.

CAMBER NOTES: DR= CAMBER AT RELEASE
D40= CAMBER AT 40 DAYS (DECK CASTING)
DF= CAMBER INCLUDING ALL DL AT 120 DAYS

NO.	DATE	BY	REMARKS

REVISIONS

UTAH DEPARTMENT OF TRANSPORTATION
SALT LAKE CITY, UTAH
STRUCTURES DIVISION

DESIGN CHECK
DRAWN CHECK
QUANT. CHECK

APPROVAL RECOMM. DATE SENIOR DESIGN ENGR.
APPROVED FOR USE BY UDOT DATE UDOT BRIDGE ENGR.

TYPICAL DETAIL SHEET
PRETENSIONED BULB TEE GIRDER
UBT50 GIRDER DETAILS 2

PROJECT NUMBER

COUNTY

UBT50 - 2
DRG. NO.

SHT. OF

UBT50G2.dgn

4/30/2009

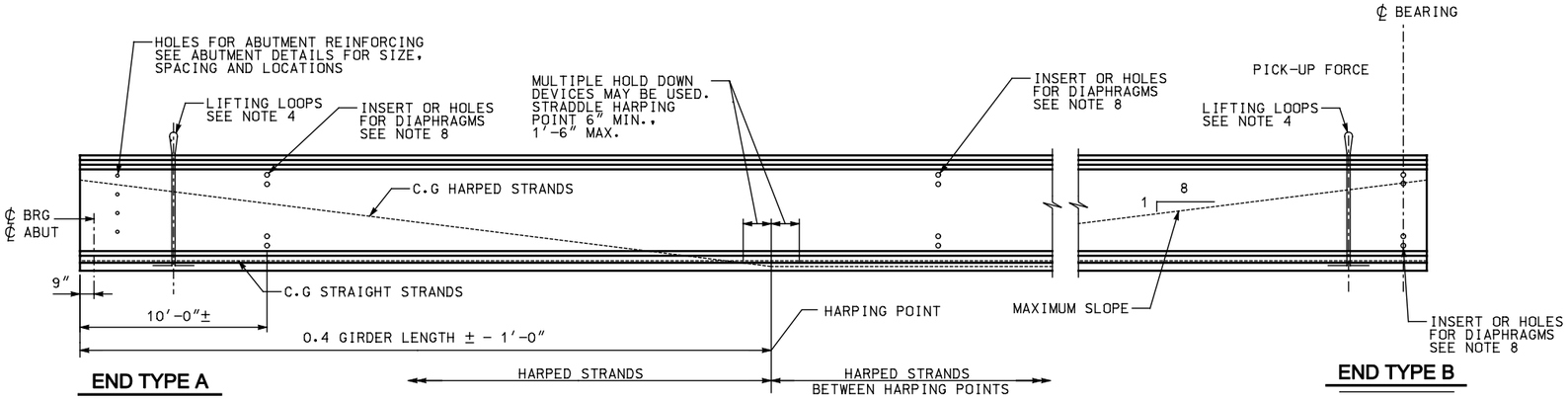

GIRDER ELEVATION

NOTES

1. INCREASE PLAN LENGTH AS NECESSARY TO COMPENSATE FOR SHORTENING DUE TO PRESTRESS AND SHRINKAGE.
2. ALL PRETENSIONED AND TEMPORARY STRANDS TO BE [0.6" DIA.] LOW RELAXATION STRANDS (AASHTO M203 GRADE 270.)
3. FOR GIRDER ENDS REQUIRING BAR OR STRAND EXTENSION SEE SUPPLEMENTAL DETAILS. FOR END TYPE 'B', CUT ALL STRANDS BELOW CONCRETE SURFACE AND GROUT WITH AN APPROVED EPOXY GROUT.
4. CONTRACTOR TO DESIGN AND INSTALL LIFTING EMBEDMENTS IN ACCORDANCE WITH THE STANDARD SPECIFICATIONS.
5. CAUTION TO BE EXERCISED IN HANDLING AND PLACING GIRDERS. ALL GIRDERS TO BE CHECKED BY THE CONTRACTOR TO ENSURE THAT THEY ARE BRACED ADEQUATELY TO PREVENT TIPPING AND TO CONTROL LATERAL BENDING DURING SHIPPING. ONCE ERECTED, ALL GIRDERS TO BE BRACED LATERALLY TO PREVENT TIPPING UNTIL THE DIAPHRAGMS HAVE BEEN INSTALLED.
6. FOR DIAPHRAGM NOTES SEE SHEET BT-4.
7. DESIGN GIRDER STIRRUP SPACING IN THIS REGION.
8. SEE FRAMING PLAN FOR DIAPHRAGM LOCATIONS AND SEE DIAPHRAGM DETAILS FOR CONNECTION REQUIREMENTS.
9. DESIGN SLAB STIRRUPS BASED ON DECK AND SHEAR CONNECTOR SELECTED.

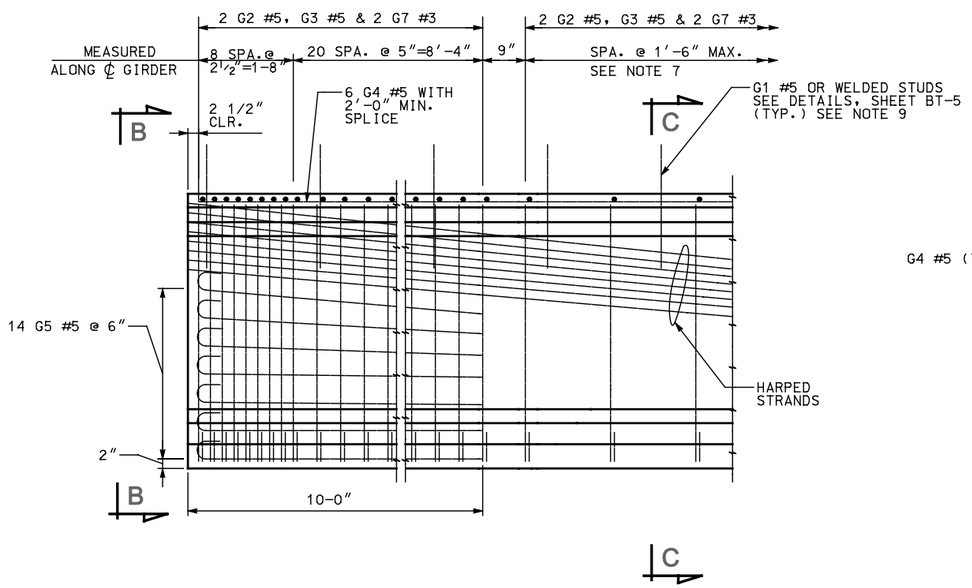

TYPICAL END ELEVATION

(2) END TYPE A SHOWN, TYPE B SIMILAR

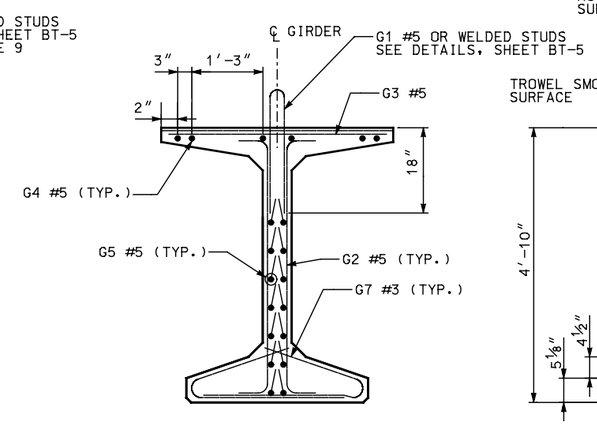

(3) VIEW B

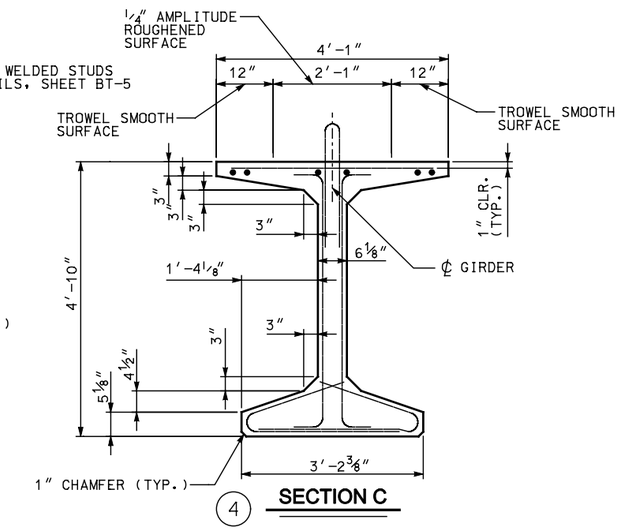

(4) SECTION C

DIAPHRAGM TYPE	END TYPE
INTEGRAL ABUTMENT	A
CANTILEVER ABUTMENT	B

MARK	LOCATION	SIZE	
G1	SLAB STIRRUP	5	
G2	GIRDER STIRRUPS	5	
G3*	GIRDER TOP FLANGE	5	STR.
G4	GIRDER LONGIT. FULL LENGTH	5	STR.
G5	GIRDER LONGITUDINAL	5	
G7*	GIRDER BOT. FLANGE TIES	3	

BENDING DIAGRAM (ALL DIMENSIONS ARE OUT TO OUT)

NOTE: FOR DIMENSION "A", SEE "DECK OFFSETS"

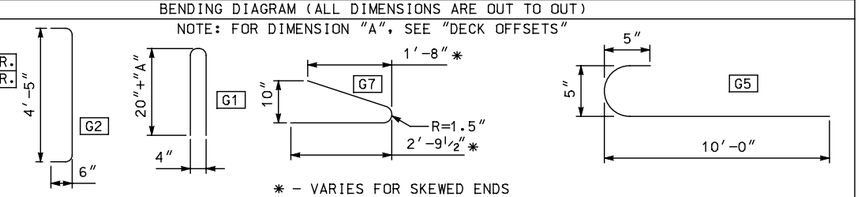

* - VARIES FOR SKEWED ENDS

REVISIONS			
NO.	DATE	BY	REMARKS

UTAH DEPARTMENT OF TRANSPORTATION
SALT LAKE CITY, UTAH
STRUCTURES DIVISION

CHECK
CHECK
CHECK
DESIGN
DRAWN
QUANT.

APPROVAL RECOMM. DATE SENIOR DESIGN ENGR.
APPROVED FOR USE BY UDOT DATE UDOT BRIDGE ENGR.

TYPICAL DETAIL SHEET
PRETENSIONED BULB TEE GIRDER
UBT58 GIRDER DETAILS 1

PROJECT NUMBER

COUNTY

UBT58 - 1
DRG. NO.

SHT. OF

UBT5651.dgn
4/30/2009

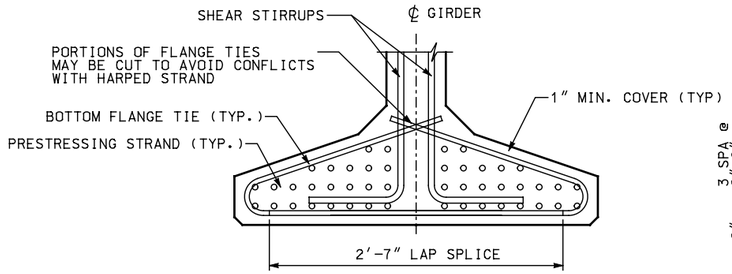

8 **BOTTOM FLANGE REINFORCING**

GIRDER END SHOWN, MIDDLE SECTION SIMILAR

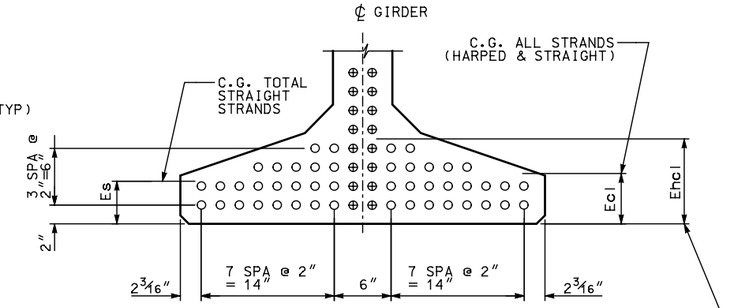

6 **STRAND PATTERN AT C.L. SPAN**

⊕ DENOTES HARPED STRAND

○ DENOTES STRAIGHT STRAND

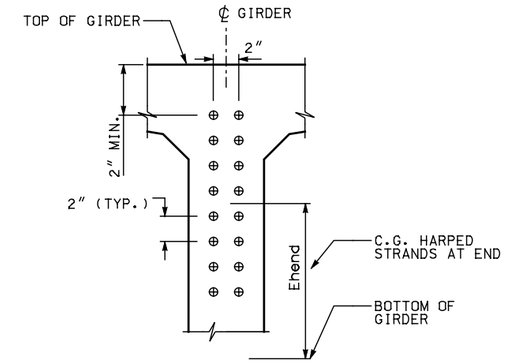

5 **STRAND PATTERN AT GIRDER END**

⊕ DENOTES HARPED STRAND

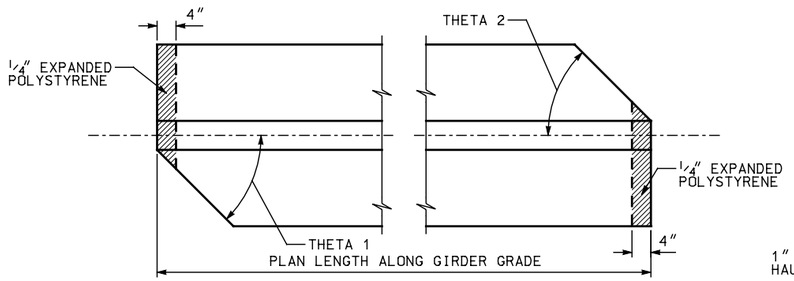

9 **SKEWED END DETAILS**

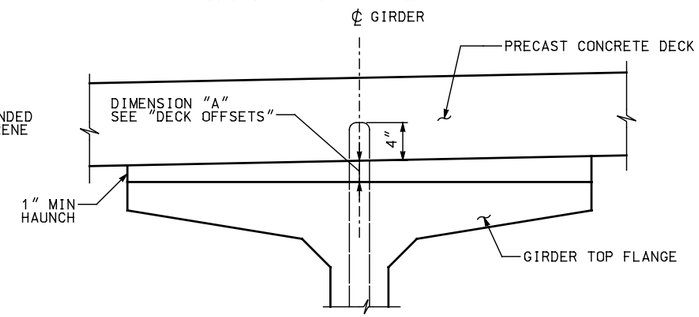

12 **DECK SECTION AT GIRDER ENDS**

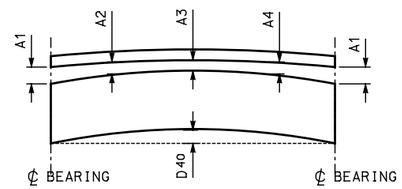

HAUNCH DIAGRAM

NOTE: "A" DIMENSIONS BASED ON GIRDER DEFLECTIONS EQUAL TO "D40" AT TIME OF SLAB PLACEMENT (40 DAYS)

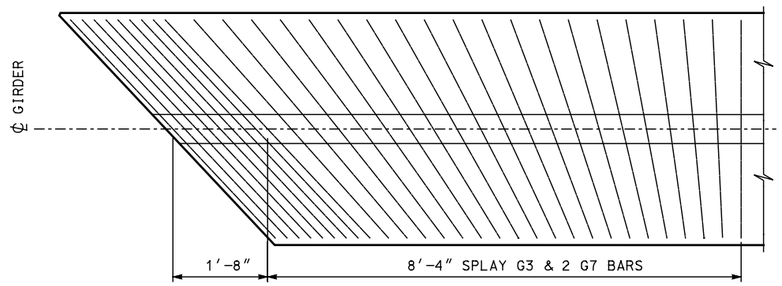

11 **TRANSVERSE REINFORCING SKEWED ENDS**

ONLY TRANSVERSE REINF. SHOWN

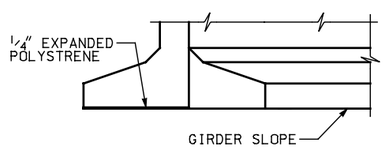

ELEVATION

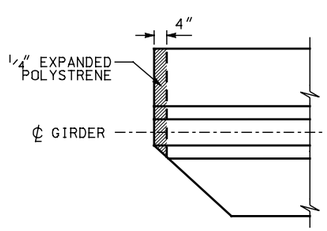

PLAN

10 **BOTTOM FLANGE SPALL PROTECTION DETAIL**

GIRDER SCHEDULE

SPAN	GIRDER	END TYPE	SHEAR CONN. TYPE W = WELDED STUD R = REINFORCING	(THETA) 1 (DEG.) ⑨	(THETA) 2 (DEG.) ⑨	PLAN LENGTH (ALONG GIRDER GRADE)	MIN. CONC. COMPR. STRENGTH F'CI KSI	MIN. CONC. COMPR. STRENGTH F'C KSI	HARPED NO. OF STRANDS	HARPED JACKING FORCE (KIPS)	STRAIGHT NO. OF STRANDS	STRAIGHT JACKING FORCE (KIPS)	LOCATION OF C.G. STRANDS Ecl ⑥	LOCATION OF C.G. STRANDS Es ⑥	LOCATION OF C.G. STRANDS Ehcl ⑥	LOCATION OF C.G. STRANDS Ehend ⑤	CAMBER D DR △	CAMBER D D40 △	CAMBER D DF △	DECK OFFSETS A1	DECK OFFSETS A2	DECK OFFSETS A3	DECK OFFSETS A4
-	-	-	-	-	-	-	-	-	-	-	-	-	-	-	-	-	-	-	-	-	-	-	-
-	-	-	-	-	-	-	-	-	-	-	-	-	-	-	-	-	-	-	-	-	-	-	-
-	-	-	-	-	-	-	-	-	-	-	-	-	-	-	-	-	-	-	-	-	-	-	-
-	-	-	-	-	-	-	-	-	-	-	-	-	-	-	-	-	-	-	-	-	-	-	-

NOTES: SHOW DIMENSIONS IN U.S. CUSTOMARY UNITS TO THE NEAREST 1/8 TH INCH.
THE NUMBER OF HARPED STRANDS SHOULD NOT EXCEED 1/2 OF NUMBER OF STRAIGHT STRANDS.

CAMBER NOTES: DR= CAMBER AT RELEASE
D40= CAMBER AT 40 DAYS (DECK CASTING)
DF= CAMBER INCLUDING ALL DL AT 120 DAYS

NO.	DATE	BY	REMARKS

REVISIONS

UTAH DEPARTMENT OF TRANSPORTATION
SALT LAKE CITY, UTAH
STRUCTURES DIVISION

DESIGN CHECK
DRAWN CHECK
QUANT. CHECK

APPROVAL RECOMM. DATE SENIOR DESIGN ENGR.
APPROVED FOR USE BY UDOT DATE UDOT BRIDGE ENGR.

TYPICAL DETAIL SHEET
PRETENSIONED BULB TEE GIRDER
UBT58 GIRDER DETAILS 2

PROJECT NUMBER

COUNTY
UBT58 - 2
DRG. NO.
SHT. OF

UBT58c2.dgn
4/30/2009

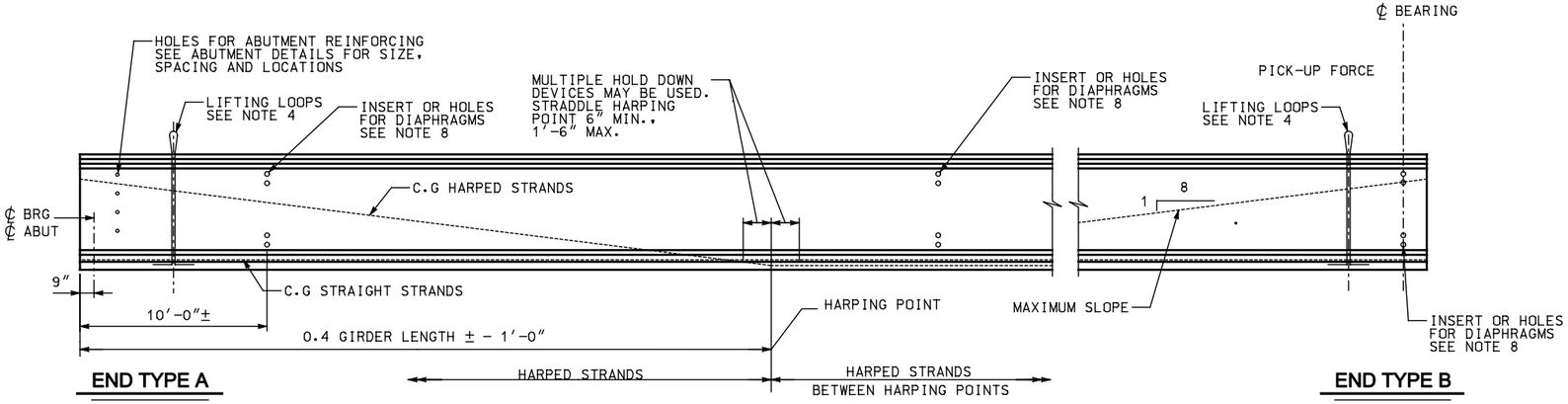

GIRDER ELEVATION

NOTES

1. INCREASE PLAN LENGTH AS NECESSARY TO COMPENSATE FOR SHORTENING DUE TO PRESTRESS AND SHRINKAGE.
2. ALL PRETENSIONED AND TEMPORARY STRANDS TO BE [0.6" DIA.] LOW RELAXATION STRANDS (AASHTO M203 GRADE 270.)
3. FOR GIRDER ENDS REQUIRING BAR OR STRAND EXTENSION SEE SUPPLEMENTAL DETAILS. FOR END TYPE 'B', CUT ALL STRANDS BELOW CONCRETE SURFACE AND GROUT WITH AN APPROVED EPOXY GROUT.
4. CONTRACTOR TO DESIGN AND INSTALL LIFTING EMBEDMENTS IN ACCORDANCE WITH THE STANDARD SPECIFICATIONS.
5. CAUTION TO BE EXERCISED IN HANDLING AND PLACING GIRDERS. ALL GIRDERS TO BE CHECKED BY THE CONTRACTOR TO ENSURE THAT THEY ARE BRACED ADEQUATELY TO PREVENT TIPPING AND TO CONTROL LATERAL BENDING DURING SHIPPING. ONCE ERECTED, ALL GIRDERS TO BE BRACED LATERALLY TO PREVENT TIPPING UNTIL THE DIAPHRAGMS HAVE BEEN INSTALLED.
6. FOR DIAPHRAGM NOTES SEE SHEET BT-4.
7. DESIGN GIRDER STIRRUP SPACING IN THIS REGION.
8. SEE FRAMING PLAN FOR DIAPHRAGM LOCATIONS AND SEE DIAPHRAGM DETAILS FOR CONNECTION REQUIREMENTS.
9. DESIGN SLAB STIRRUPS BASED ON DECK AND SHEAR CONNECTOR SELECTED.

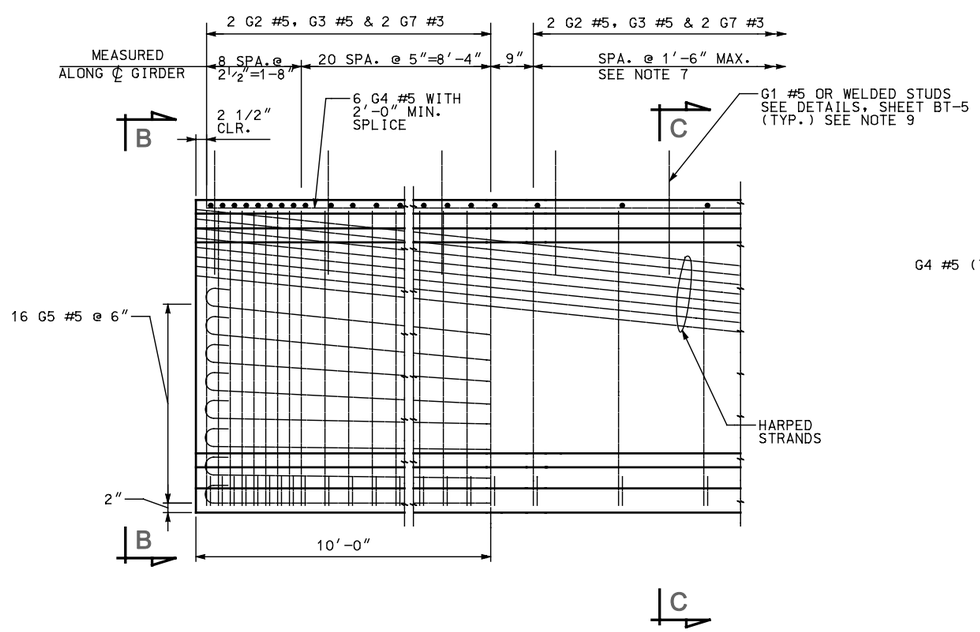

2 **TYPICAL END ELEVATION**

END TYPE A SHOWN, TYPE B SIMILAR

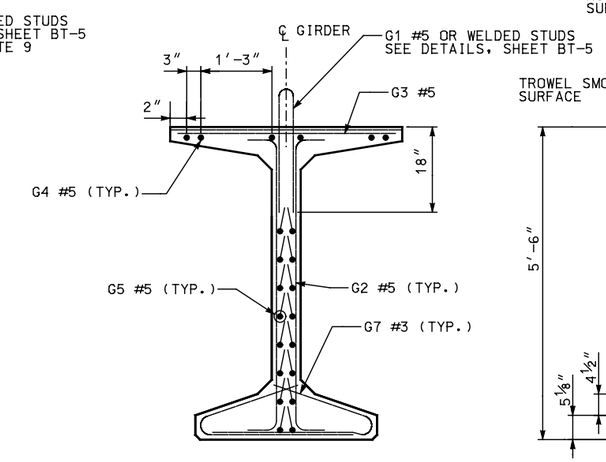

3 **VIEW B**

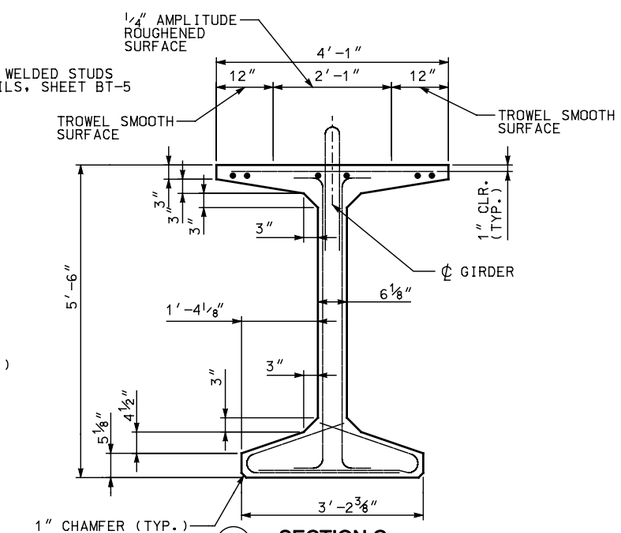

4 **SECTION C**

DIAPHRAGM TYPE	END TYPE
INTEGRAL ABUTMENT	A
CANTILEVER ABUTMENT	B

MARK	LOCATION	SIZE	
G1	SLAB STIRRUP	5	
G2	GIRDER STIRRUPS	5	
G3✱	GIRDER TOP FLANGE	5	STR.
G4	GIRDER LONGIT. FULL LENGTH	5	STR.
G5	GIRDER LONGITUDINAL	5	
G7✱	GIRDER BOT. FLANGE TIES	3	

BENDING DIAGRAM (ALL DIMENSIONS ARE OUT TO OUT)

NOTE: FOR DIMENSION "A", SEE "DECK OFFSETS"

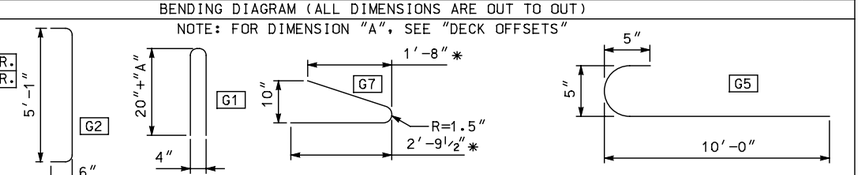

✱ - VARIES FOR SKEWED ENDS

NO.	DATE	BY	REMARKS

REVISIONS

UTAH DEPARTMENT OF TRANSPORTATION
SALT LAKE CITY, UTAH
STRUCTURES DIVISION

DESIGN — CHECK
DRAWN — CHECK
QUANT. — CHECK

APPROVAL RECOMM. — DATE — SENIOR DESIGN ENGR.
APPROVED FOR USE BY UDOT — DATE — UDOT BRIDGE ENGR.

TYPICAL DETAIL SHEET
PRETENSIONED BULB TEE GIRDER
UBT66 GIRDER DETAILS 1

PROJECT NUMBER

COUNTY

UBT66 - 1
DRG. NO.

SHT. OF

UBT66G1.dgn
4/30/2009

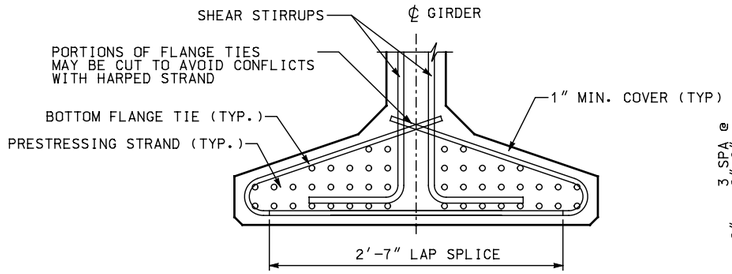

8 **BOTTOM FLANGE REINFORCING**

GIRDER END SHOWN, MIDDLE SECTION SIMILAR

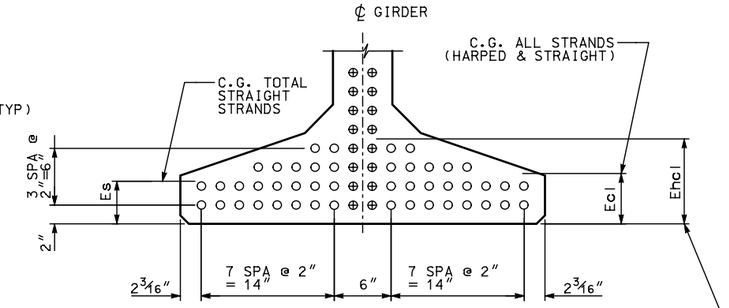

6 **STRAND PATTERN AT C.L. SPAN**

⊕ DENOTES HARPED STRAND

○ DENOTES STRAIGHT STRAND

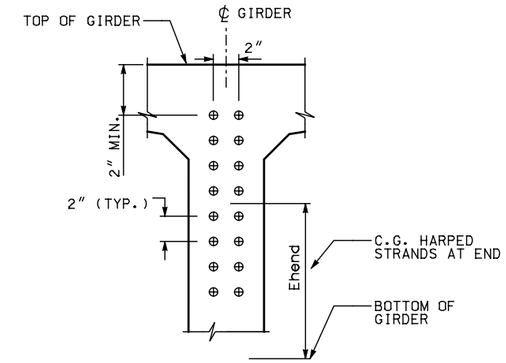

5 **STRAND PATTERN AT GIRDER END**

⊕ DENOTES HARPED STRAND

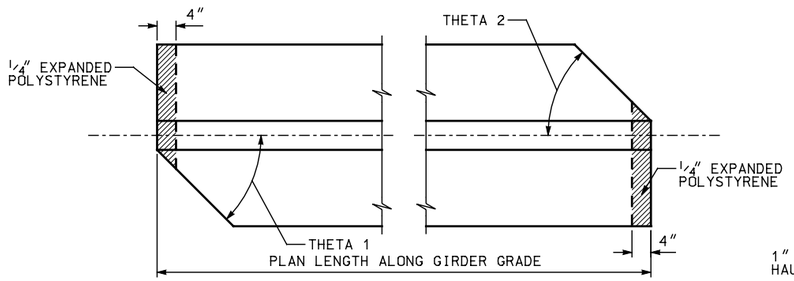

9 **SKEWED END DETAILS**

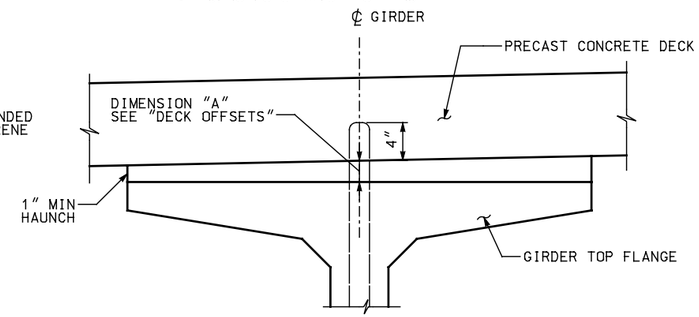

12 **DECK SECTION AT GIRDER ENDS**

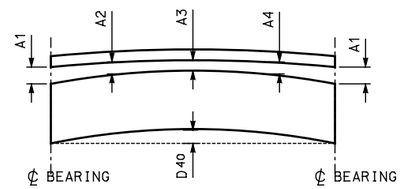

HAUNCH DIAGRAM

NOTE: "A" DIMENSIONS BASED ON GIRDER DEFLECTIONS EQUAL TO "D40" AT TIME OF SLAB PLACEMENT (40 DAYS)

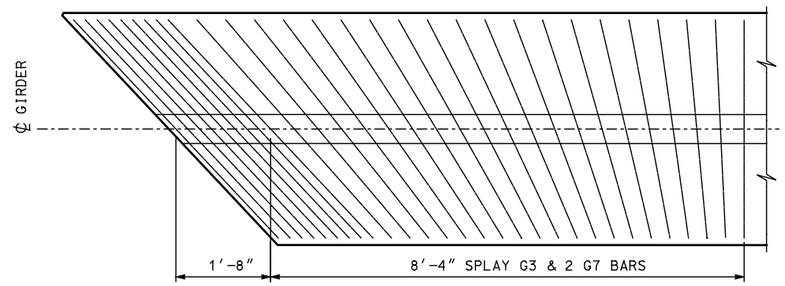

11 **TRANSVERSE REINFORCING SKEWED ENDS**

ONLY TRANSVERSE REINF. SHOWN

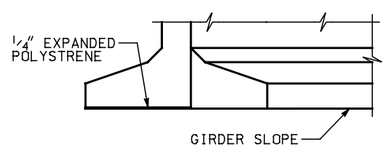

ELEVATION

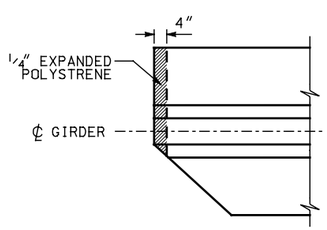

PLAN

10 **BOTTOM FLANGE SPALL PROTECTION DETAIL**

GIRDER SCHEDULE

SPAN	GIRDER	END TYPE	SHEAR CONN. TYPE W = WELDED STUD R = REINFORCING	(THETA) 1 (DEG.) ⑨	(THETA) 2 (DEG.) ⑨	PLAN LENGTH (ALONG GIRDER GRADE)	MIN. CONC. COMPR. STRENGTH F'CI KSI	MIN. CONC. COMPR. STRENGTH F'C KSI	HARPED NO. OF STRANDS	HARPED JACKING FORCE (KIPS)	STRAIGHT NO. OF STRANDS	STRAIGHT JACKING FORCE (KIPS)	LOCATION OF C.G. STRANDS Ecl ⑥	LOCATION OF C.G. STRANDS Es ⑥	LOCATION OF C.G. STRANDS Ehcl ⑥	LOCATION OF C.G. STRANDS Ehend ⑤	CAMBER D DR △	CAMBER D D40 △	CAMBER D DF △	DECK OFFSETS A1	DECK OFFSETS A2	DECK OFFSETS A3	DECK OFFSETS A4
-	-	-	-	-	-	-	-	-	-	-	-	-	-	-	-	-	-	-	-	-	-	-	-
-	-	-	-	-	-	-	-	-	-	-	-	-	-	-	-	-	-	-	-	-	-	-	-
-	-	-	-	-	-	-	-	-	-	-	-	-	-	-	-	-	-	-	-	-	-	-	-
-	-	-	-	-	-	-	-	-	-	-	-	-	-	-	-	-	-	-	-	-	-	-	-

NOTES: SHOW DIMENSIONS IN U.S. CUSTOMARY UNITS TO THE NEAREST 1/8 TH INCH.
THE NUMBER OF HARPED STRANDS SHOULD NOT EXCEED 1/2 OF NUMBER OF STRAIGHT STRANDS.

CAMBER NOTES: DR= CAMBER AT RELEASE
D40= CAMBER AT 40 DAYS (DECK CASTING)
DF= CAMBER INCLUDING ALL DL AT 120 DAYS

NO.	DATE	BY	REMARKS

REVISIONS

UTAH DEPARTMENT OF TRANSPORTATION
SALT LAKE CITY, UTAH
STRUCTURES DIVISION

DESIGN CHECK
DRAWN CHECK
QUANT. CHECK

APPROVAL RECOMM. DATE SENIOR DESIGN ENGR.
APPROVED FOR USE BY UDOT DATE UDOT BRIDGE ENGR.

TYPICAL DETAIL SHEET
PRETENSIONED BULB TEE GIRDER
UBT66 GIRDER DETAILS 2

PROJECT NUMBER

COUNTY
UBT66 - 2
DRG. NO.
SHT. OF

UBT66G2.dgn
4/30/2009

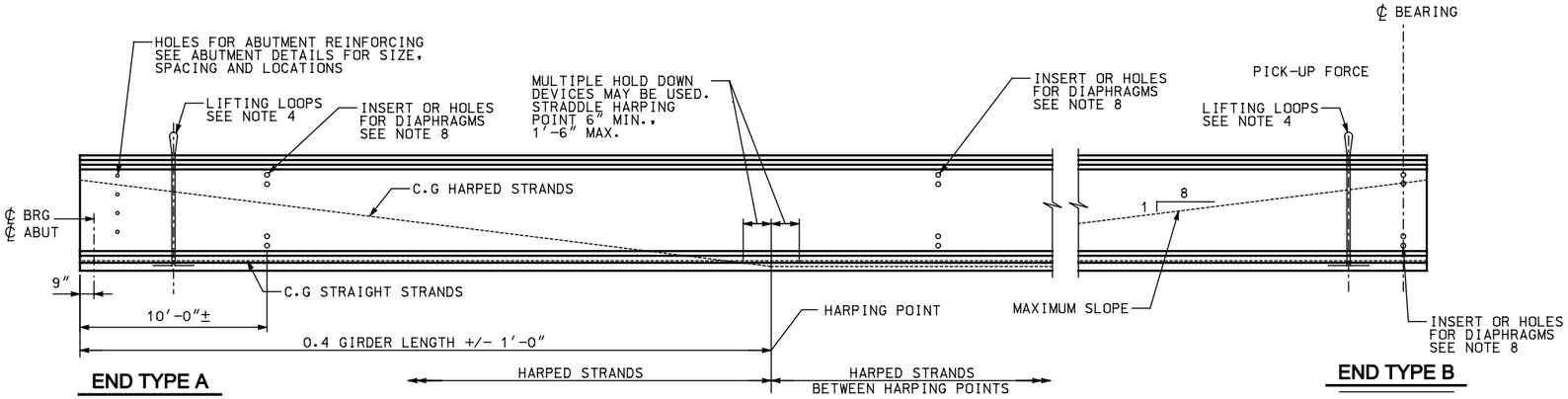

GIRDER ELEVATION

NOTES

1. INCREASE PLAN LENGTH AS NECESSARY TO COMPENSATE FOR SHORTENING DUE TO PRESTRESS AND SHRINKAGE.
2. ALL PRETENSIONED AND TEMPORARY STRANDS TO BE [0.6" DIA.] LOW RELAXATION STRANDS (AASHTO M203 GRADE 270.)
3. FOR GIRDER ENDS REQUIRING BAR OR STRAND EXTENSION SEE SUPPLEMENTAL DETAILS. FOR END TYPE 'B', CUT ALL STRANDS BELOW CONCRETE SURFACE AND GROUT WITH AN APPROVED EPOXY GROUT.
4. CONTRACTOR TO DESIGN AND INSTALL LIFTING EMBEDMENTS IN ACCORDANCE WITH THE STANDARD SPECIFICATIONS.
5. CAUTION TO BE EXERCISED IN HANDLING AND PLACING GIRDERS. ALL GIRDERS TO BE CHECKED BY THE CONTRACTOR TO ENSURE THAT THEY ARE BRACED ADEQUATELY TO PREVENT TIPPING AND TO CONTROL LATERAL BENDING DURING SHIPPING. ONCE ERECTED, ALL GIRDERS TO BE BRACED LATERALLY TO PREVENT TIPPING UNTIL THE DIAPHRAGMS HAVE BEEN INSTALLED.
6. FOR DIAPHRAGM NOTES SEE SHEET BT-4.
7. DESIGN GIRDER STIRRUP SPACING IN THIS REGION.
8. SEE FRAMING PLAN FOR DIAPHRAGM LOCATIONS AND SEE DIAPHRAGM DETAILS FOR CONNECTION REQUIREMENTS.
9. DESIGN SLAB STIRRUPS BASED ON DECK AND SHEAR CONNECTOR SELECTED.

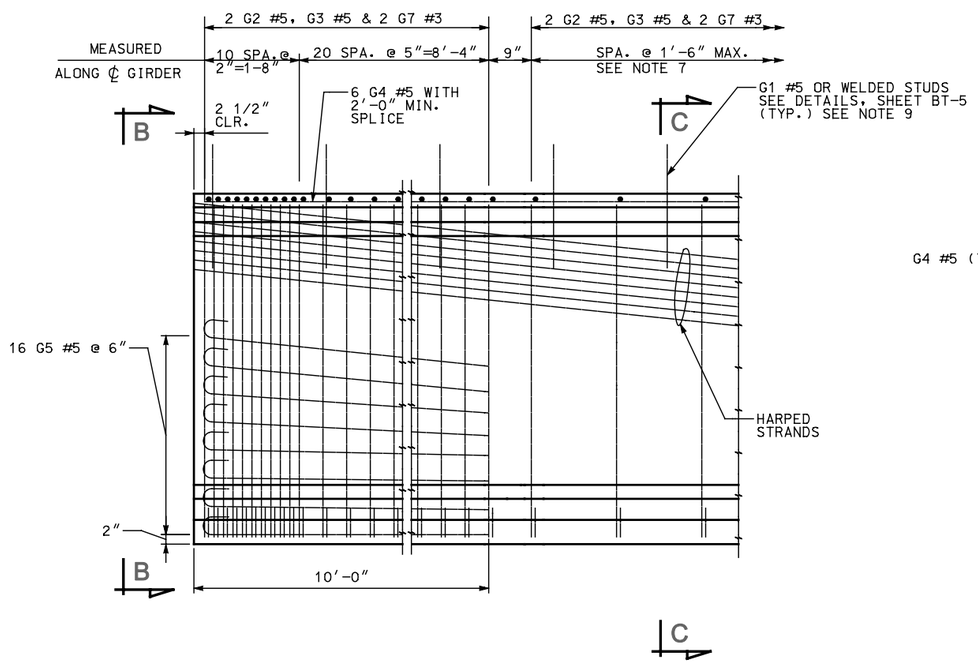

2 TYPICAL END ELEVATION

END TYPE A SHOWN, TYPE B SIMILAR

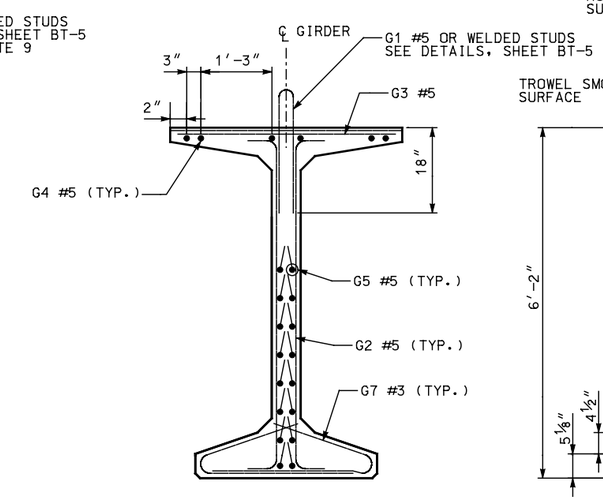

3 VIEW B

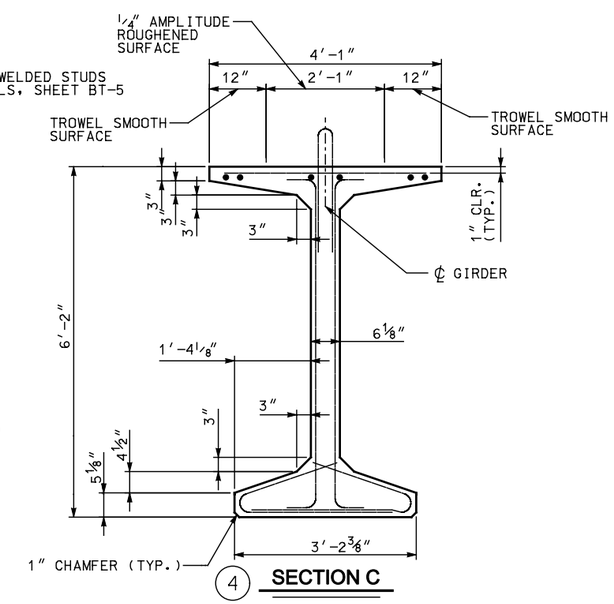

4 SECTION C

DIAPHRAGM TYPE	END TYPE
INTEGRAL ABUTMENT	A
CANTILEVER ABUTMENT	B

MARK	LOCATION	SIZE	
G1	SLAB STIRRUP	5	
G2	GIRDER STIRRUPS	5	
G3*	GIRDER TOP FLANGE	5	STR.
G4	GIRDER LONGIT. FULL LENGTH	5	STR.
G5	GIRDER LONGITUDINAL	5	
G7*	GIRDER BOT. FLANGE TIES	3	

BENDING DIAGRAM (ALL DIMENSIONS ARE OUT TO OUT)

NOTE: FOR DIMENSION "A", SEE "DECK OFFSETS"

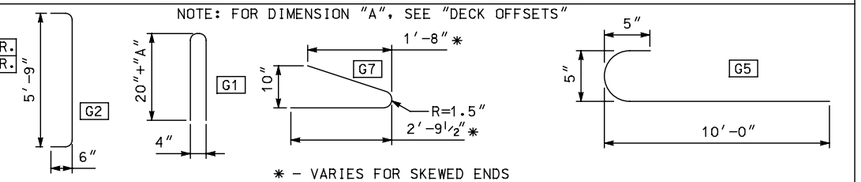

* - VARIES FOR SKEWED ENDS

NO.	DATE	BY	REMARKS

REVISIONS

UTAH DEPARTMENT OF TRANSPORTATION
SALT LAKE CITY, UTAH
STRUCTURES DIVISION

DESIGN CHECK
DRAWN CHECK
QUANT. CHECK

APPROVAL RECOMM. DATE SENIOR DESIGN ENGR.
APPROVED FOR ISSUE BY UDOT DATE UDOT BRIDGE ENGR.

TYPICAL DETAIL SHEET
PRETENSIONED BULB TEE GIRDER
UBT74 GIRDER DETAILS 1

PROJECT NUMBER

COUNTY

UBT74 - 1
DRG. NO.

SHT. OF

UBT74d1.dgn
4/30/2009

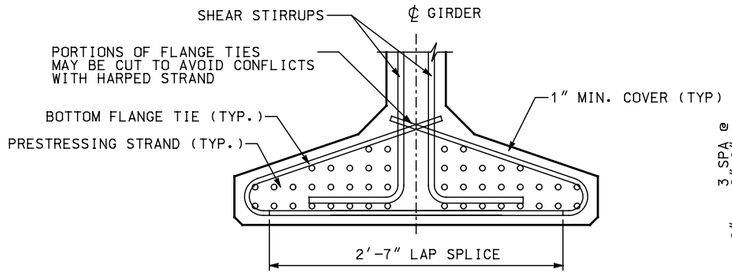

8 **BOTTOM FLANGE REINFORCING**

GIRDER END SHOWN, MIDDLE SECTION SIMILAR

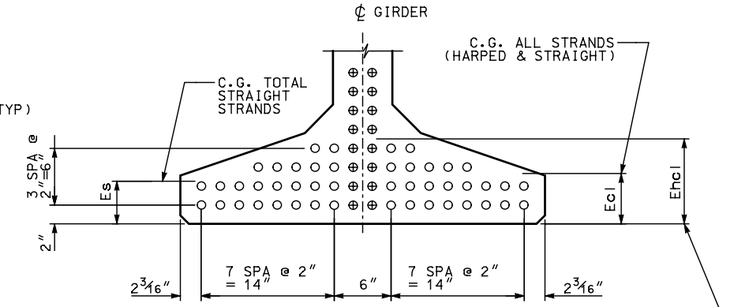

6 **STRAND PATTERN AT C.L. SPAN**

⊕ DENOTES HARPED STRAND

○ DENOTES STRAIGHT STRAND

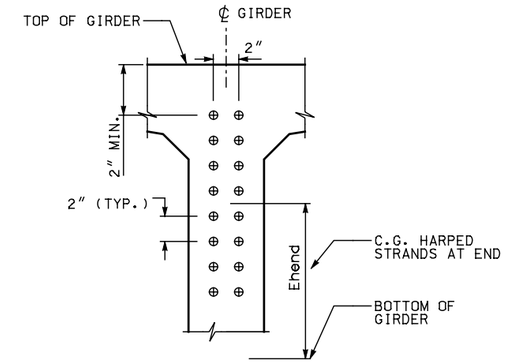

5 **STRAND PATTERN AT GIRDER END**

⊕ DENOTES HARPED STRAND

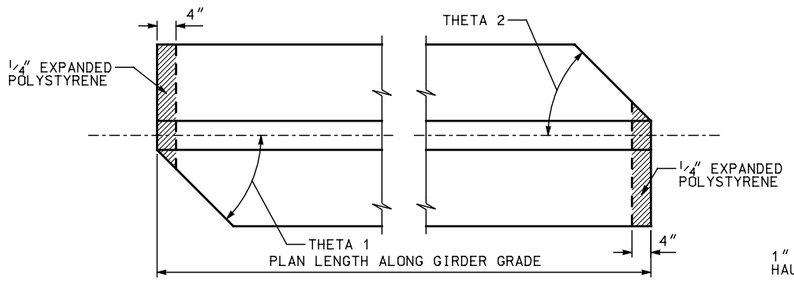

9 **SKEWED END DETAILS**

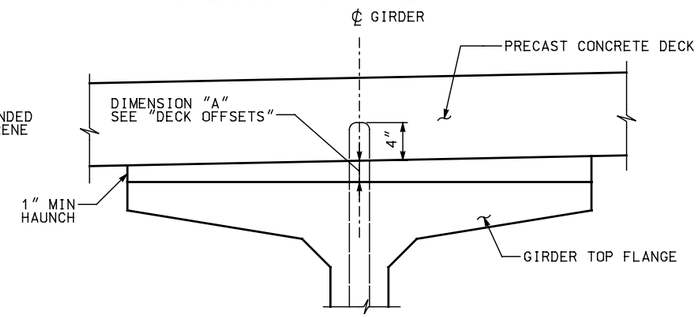

12 **DECK SECTION AT GIRDER ENDS**

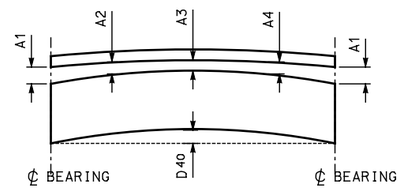

HAUNCH DIAGRAM

NOTE: "A" DIMENSIONS BASED ON GIRDER DEFLECTIONS EQUAL TO "D40" AT TIME OF SLAB PLACEMENT (40 DAYS)

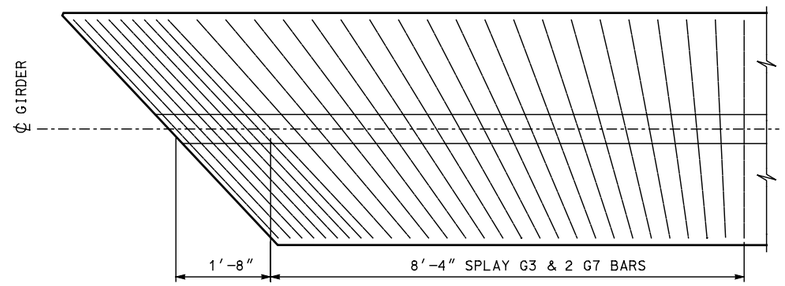

11 **TRANSVERSE REINFORCING SKEWED ENDS**

ONLY TRANSVERSE REINF. SHOWN

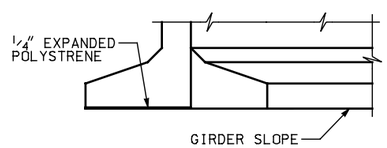

ELEVATION

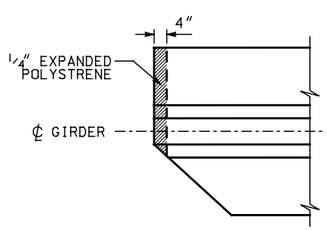

PLAN

10 **BOTTOM FLANGE SPALL PROTECTION DETAIL**

GIRDER SCHEDULE

SPAN	GIRDER	END TYPE	SHEAR CONN. TYPE W = WELDED STUD R = REINFORCING	(THETA) 1 (DEG.) ⑨	(THETA) 2 (DEG.) ⑨	PLAN LENGTH (ALONG GIRDER GRADE)	MIN. CONC. COMPR. STRENGTH F'CI KSI	MIN. CONC. COMPR. STRENGTH F'C KSI	HARPED NO. OF STRANDS	HARPED JACKING FORCE (KIPS)	STRAIGHT NO. OF STRANDS	STRAIGHT JACKING FORCE (KIPS)	LOCATION OF C.G. STRANDS Ecl ⑥	LOCATION OF C.G. STRANDS Es ⑥	LOCATION OF C.G. STRANDS Ehcl ⑥	LOCATION OF C.G. STRANDS Ehend ⑤	CAMBER D DR △	CAMBER D D40 △	CAMBER D DF △	DECK OFFSETS A1	DECK OFFSETS A2	DECK OFFSETS A3	DECK OFFSETS A4
-	-	-	-	-	-	-	-	-	-	-	-	-	-	-	-	-	-	-	-	-	-	-	-
-	-	-	-	-	-	-	-	-	-	-	-	-	-	-	-	-	-	-	-	-	-	-	-
-	-	-	-	-	-	-	-	-	-	-	-	-	-	-	-	-	-	-	-	-	-	-	-
-	-	-	-	-	-	-	-	-	-	-	-	-	-	-	-	-	-	-	-	-	-	-	-

NOTES: SHOW DIMENSIONS IN U.S. CUSTOMARY UNITS TO THE NEAREST 1/8 TH INCH.
THE NUMBER OF HARPED STRANDS SHOULD NOT EXCEED 1/2 OF NUMBER OF STRAIGHT STRANDS.

CAMBER NOTES: DR= CAMBER AT RELEASE
D40= CAMBER AT 40 DAYS (DECK CASTING)
DF= CAMBER INCLUDING ALL DL AT 120 DAYS

NO.	DATE	BY	REMARKS

REVISIONS

UTAH DEPARTMENT OF TRANSPORTATION
SALT LAKE CITY, UTAH
STRUCTURES DIVISION

DESIGN CHECK
DRAWN CHECK
QUANT. CHECK

APPROVAL RECOMM. DATE SENIOR DESIGN ENGR.
APPROVED FOR USE BY UDOT DATE UDOT BRIDGE ENGR.

TYPICAL DETAIL SHEET
PRETENSIONED BULB TEE GIRDER
UBT74 GIRDER DETAILS 2

PROJECT NUMBER

COUNTY
UBT74 - 2
DRG. NO.
SHT. OF

UBT7422.dgn
4/30/2009

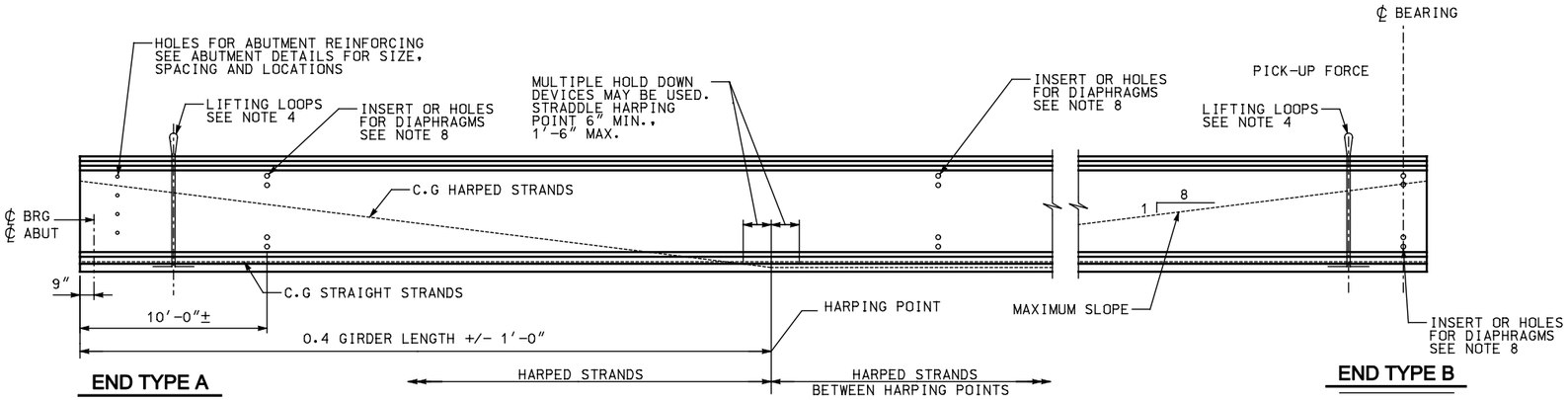

GIRDER ELEVATION

NOTES

1. INCREASE PLAN LENGTH AS NECESSARY TO COMPENSATE FOR SHORTENING DUE TO PRESTRESS AND SHRINKAGE.
2. ALL PRETENSIONED AND TEMPORARY STRANDS TO BE [0.6" DIA.] LOW RELAXATION STRANDS (AASHTO M203 GRADE 270.)
3. FOR GIRDER ENDS REQUIRING BAR OR STRAND EXTENSION SEE SUPPLEMENTAL DETAILS. FOR END TYPE 'B', CUT ALL STRANDS BELOW CONCRETE SURFACE AND GROUT WITH AN APPROVED EPOXY GROUT.
4. CONTRACTOR TO DESIGN AND INSTALL LIFTING EMBEDMENTS IN ACCORDANCE WITH THE STANDARD SPECIFICATIONS.
5. CAUTION TO BE EXERCISED IN HANDLING AND PLACING GIRDERS. ALL GIRDERS TO BE CHECKED BY THE CONTRACTOR TO ENSURE THAT THEY ARE BRACED ADEQUATELY TO PREVENT TIPPING AND TO CONTROL LATERAL BENDING DURING SHIPPING. ONCE ERECTED, ALL GIRDERS TO BE BRACED LATERALLY TO PREVENT TIPPING UNTIL THE DIAPHRAGMS HAVE BEEN INSTALLED.
6. FOR DIAPHRAGM NOTES SEE SHEET BT-4.
7. DESIGN GIRDER STIRRUP SPACING IN THIS REGION.
8. SEE FRAMING PLAN FOR DIAPHRAGM LOCATIONS AND SEE DIAPHRAGM DETAILS FOR CONNECTION REQUIREMENTS.
9. DESIGN SLAB STIRRUPS BASED ON DECK AND SHEAR CONNECTOR SELECTED.

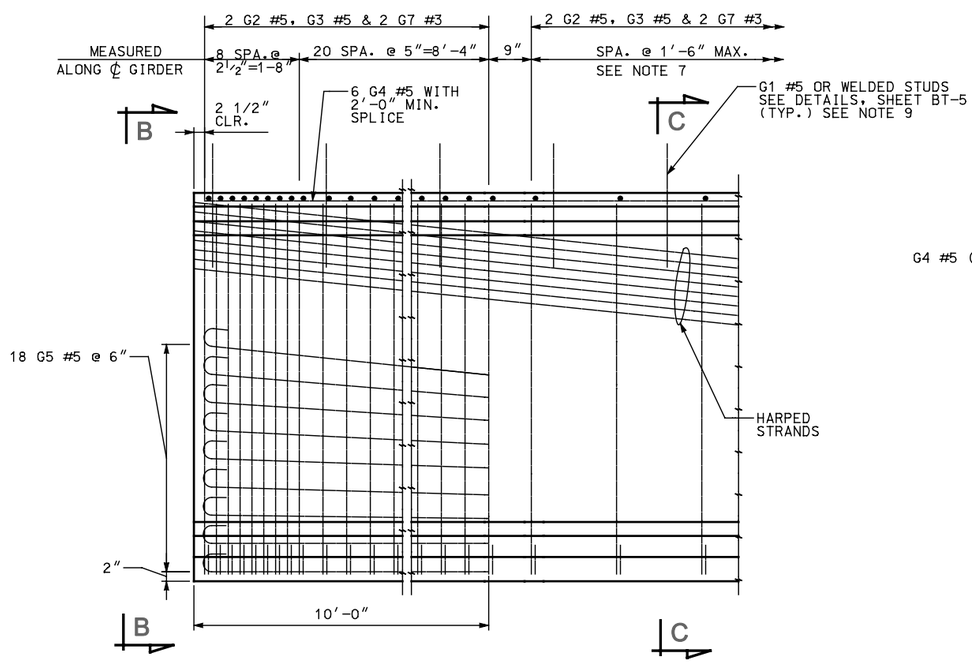

2 TYPICAL END ELEVATION

END TYPE A SHOWN, TYPE B SIMILAR

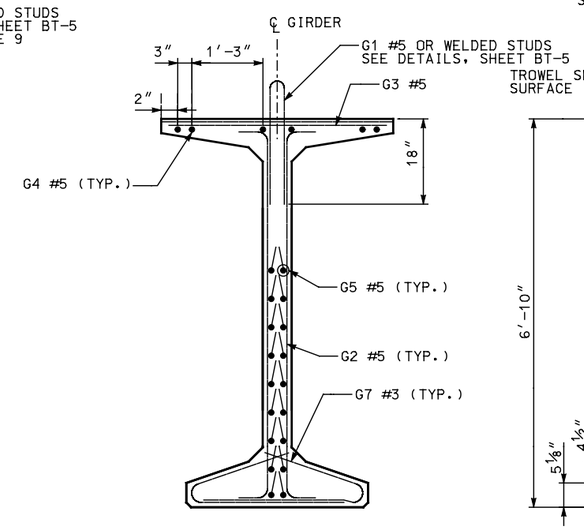

3 VIEW B

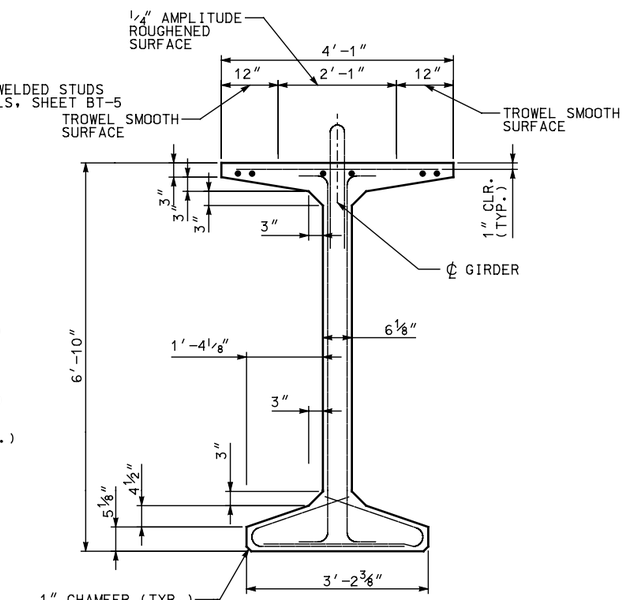

4 SECTION C

DIAPHRAGM TYPE	END TYPE
INTEGRAL ABUTMENT	A
CANTILEVER ABUTMENT	B

MARK	LOCATION	SIZE	
G1	SLAB STIRRUP	5	
G2	GIRDER STIRRUPS	5	
G3*	GIRDER TOP FLANGE	5	STR.
G4	GIRDER LONGIT. FULL LENGTH	5	STR.
G5	GIRDER LONGITUDINAL	5	
G7*	GIRDER BOT. FLANGE TIES	3	

BENDING DIAGRAM (ALL DIMENSIONS ARE OUT TO OUT)

NOTE: FOR DIMENSION "A", SEE "DECK OFFSETS"

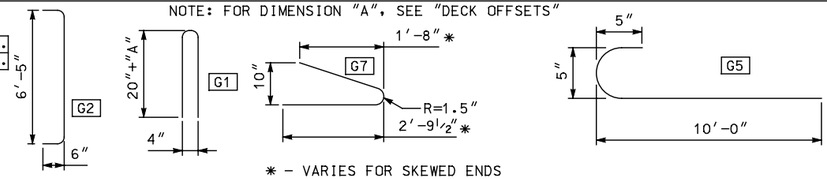

* - VARIES FOR SKEWED ENDS

NO.	DATE	BY	REMARKS

REVISIONS

UTAH DEPARTMENT OF TRANSPORTATION
SALT LAKE CITY, UTAH
STRUCTURES DIVISION

DESIGN — CHECK
DRAWN — CHECK
QUANT. — CHECK

APPROVAL RECOMM. — DATE — SENIOR DESIGN ENGR.
APPROVED FOR USE BY UDOT — DATE — UDOT BRIDGE ENGR.

TYPICAL DETAIL SHEET
PRETENSIONED BULB TEE GIRDER
UBT82 GIRDER DETAILS 1

PROJECT NUMBER

COUNTY

UBT82 - 1
DRG. NO.

SHT. OF

UBT82G1.dgn
4/30/2009

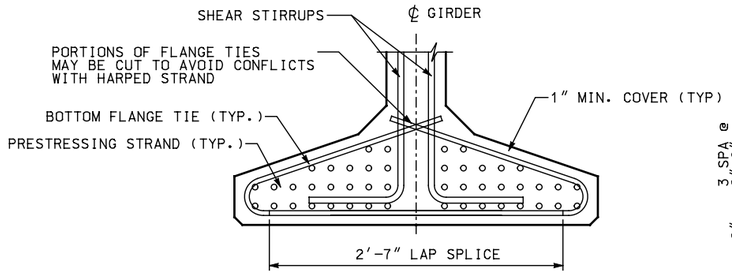

8 **BOTTOM FLANGE REINFORCING**

GIRDER END SHOWN, MIDDLE SECTION SIMILAR

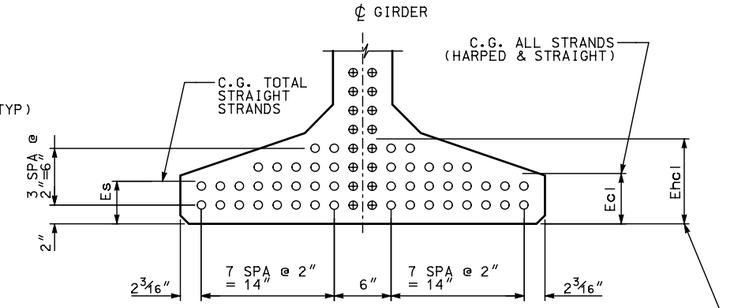

6 **STRAND PATTERN AT C.L. SPAN**

⊕ DENOTES HARPED STRAND

○ DENOTES STRAIGHT STRAND

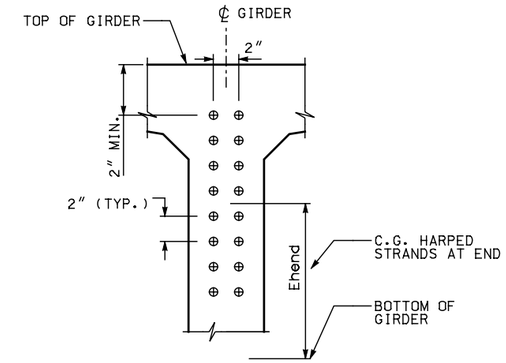

5 **STRAND PATTERN AT GIRDER END**

⊕ DENOTES HARPED STRAND

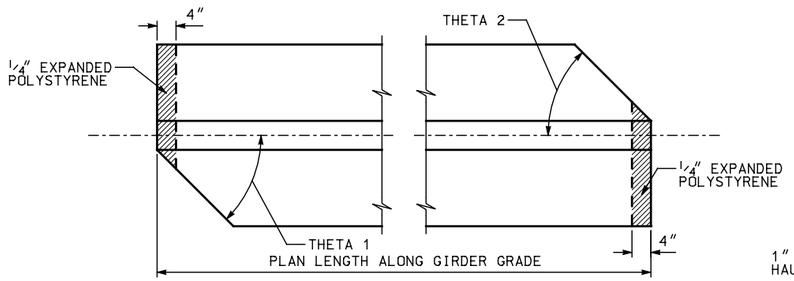

9 **SKEWED END DETAILS**

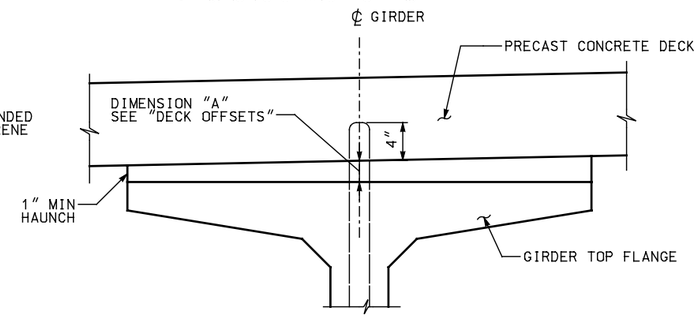

12 **DECK SECTION AT GIRDER ENDS**

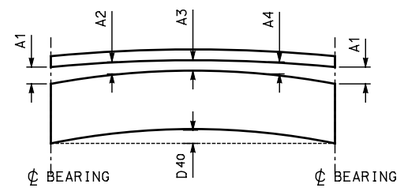

HAUNCH DIAGRAM

NOTE: "A" DIMENSIONS BASED ON GIRDER DEFLECTIONS EQUAL TO "D40" AT TIME OF SLAB PLACEMENT (40 DAYS)

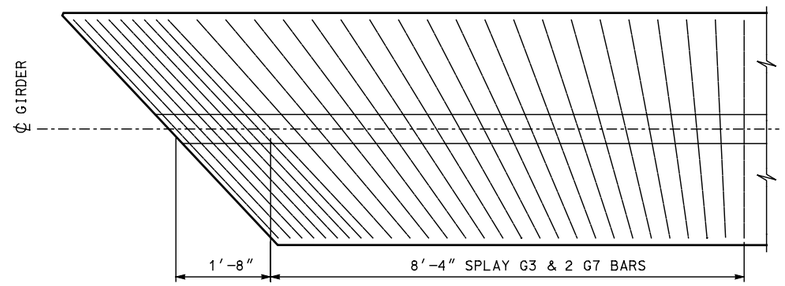

11 **TRANSVERSE REINFORCING SKEWED ENDS**

ONLY TRANSVERSE REINF. SHOWN

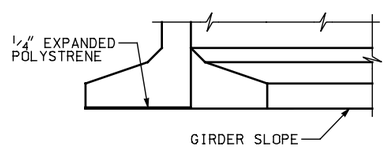

ELEVATION

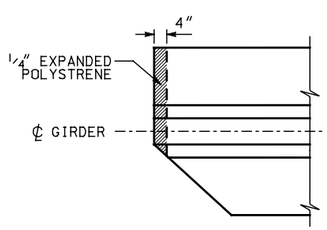

PLAN

10 **BOTTOM FLANGE SPALL PROTECTION DETAIL**

GIRDER SCHEDULE

SPAN	GIRDER	END TYPE	SHEAR CONN. TYPE W = WELDED STUD R = REINFORCING	(THETA) 1 (DEG.) ⑨	(THETA) 2 (DEG.) ⑨	PLAN LENGTH (ALONG GIRDER GRADE)	MIN. CONC. COMPR. STRENGTH F'CI KSI	MIN. CONC. COMPR. STRENGTH F'C KSI	HARPED NO. OF STRANDS	HARPED JACKING FORCE (KIPS)	STRAIGHT NO. OF STRANDS	STRAIGHT JACKING FORCE (KIPS)	LOCATION OF C.G. STRANDS Ecl ⑥	LOCATION OF C.G. STRANDS Es ⑥	LOCATION OF C.G. STRANDS Ehcl ⑥	LOCATION OF C.G. STRANDS Ehend ⑤	CAMBER D DR △	CAMBER D D40 △	CAMBER D DF △	DECK OFFSETS A1	DECK OFFSETS A2	DECK OFFSETS A3	DECK OFFSETS A4
-	-	-	-	-	-	-	-	-	-	-	-	-	-	-	-	-	-	-	-	-	-	-	-
-	-	-	-	-	-	-	-	-	-	-	-	-	-	-	-	-	-	-	-	-	-	-	-
-	-	-	-	-	-	-	-	-	-	-	-	-	-	-	-	-	-	-	-	-	-	-	-
-	-	-	-	-	-	-	-	-	-	-	-	-	-	-	-	-	-	-	-	-	-	-	-

NOTES: SHOW DIMENSIONS IN U.S. CUSTOMARY UNITS TO THE NEAREST 1/8 TH INCH.
THE NUMBER OF HARPED STRANDS SHOULD NOT EXCEED 1/2 OF NUMBER OF STRAIGHT STRANDS.

CAMBER NOTES: DR= CAMBER AT RELEASE
D40= CAMBER AT 40 DAYS (DECK CASTING)
DF= CAMBER INCLUDING ALL DL AT 120 DAYS

NO.	DATE	BY	REMARKS

REVISIONS

UTAH DEPARTMENT OF TRANSPORTATION
SALT LAKE CITY, UTAH
STRUCTURES DIVISION

DESIGN CHECK
DRAWN CHECK
QUANT. CHECK

APPROVAL RECOMM. DATE SENIOR DESIGN ENGR.
APPROVED FOR USE BY UDOT DATE UDOT BRIDGE ENGR.

TYPICAL DETAIL SHEET
PRETENSIONED BULB TEE GIRDER
UBT82 GIRDER DETAILS 2

PROJECT NUMBER

COUNTY

UBT82 - 2
DRG. NO.

SHT. OF

UBT82G2.dgn

4/30/2009

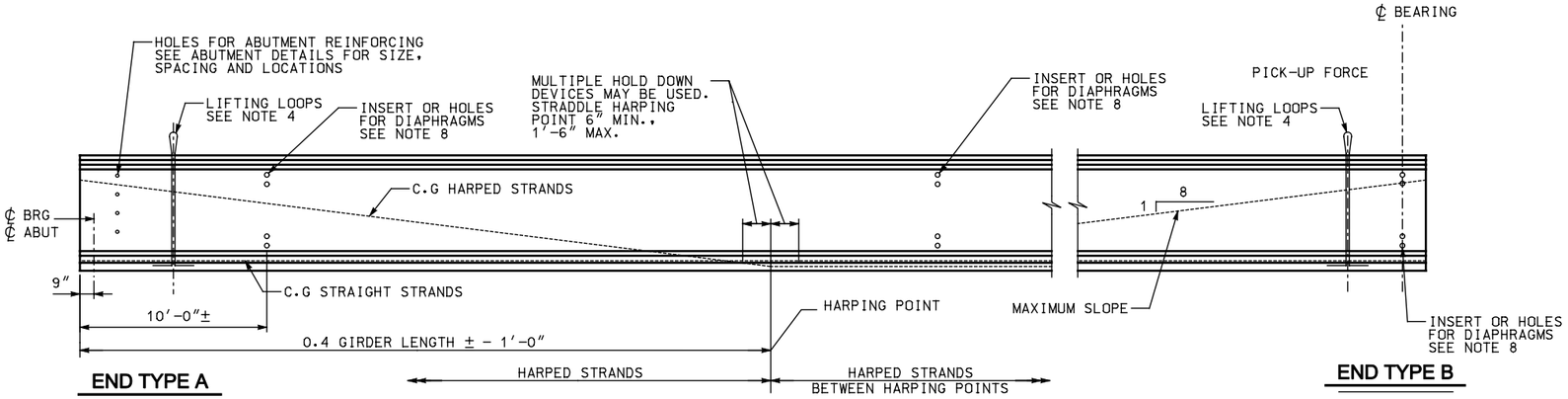

GIRDER ELEVATION

NOTES

1. INCREASE PLAN LENGTH AS NECESSARY TO COMPENSATE FOR SHORTENING DUE TO PRESTRESS AND SHRINKAGE.
2. ALL PRETENSIONED AND TEMPORARY STRANDS TO BE [0.6" DIA.] LOW RELAXATION STRANDS (AASHTO M203 GRADE 270.)
3. FOR GIRDER ENDS REQUIRING BAR OR STRAND EXTENSION SEE SUPPLEMENTAL DETAILS. FOR END TYPE 'B', CUT ALL STRANDS BELOW CONCRETE SURFACE AND GROUT WITH AN APPROVED EPOXY GROUT.
4. CONTRACTOR TO DESIGN AND INSTALL LIFTING EMBEDMENTS IN ACCORDANCE WITH THE STANDARD SPECIFICATIONS.
5. CAUTION TO BE EXERCISED IN HANDLING AND PLACING GIRDERS. ALL GIRDERS TO BE CHECKED BY THE CONTRACTOR TO ENSURE THAT THEY ARE BRACED ADEQUATELY TO PREVENT TIPPING AND TO CONTROL LATERAL BENDING DURING SHIPPING. ONCE ERECTED, ALL GIRDERS TO BE BRACED LATERALLY TO PREVENT TIPPING UNTIL THE DIAPHRAGMS HAVE BEEN INSTALLED.
6. FOR DIAPHRAGM NOTES SEE SHEET BT-4.
7. DESIGN GIRDER STIRRUP SPACING IN THIS REGION.
8. SEE FRAMING PLAN FOR DIAPHRAGM LOCATIONS AND SEE DIAPHRAGM DETAILS FOR CONNECTION REQUIREMENTS.
9. DESIGN SLAB STIRRUPS BASED ON DECK AND SHEAR CONNECTOR SELECTED.

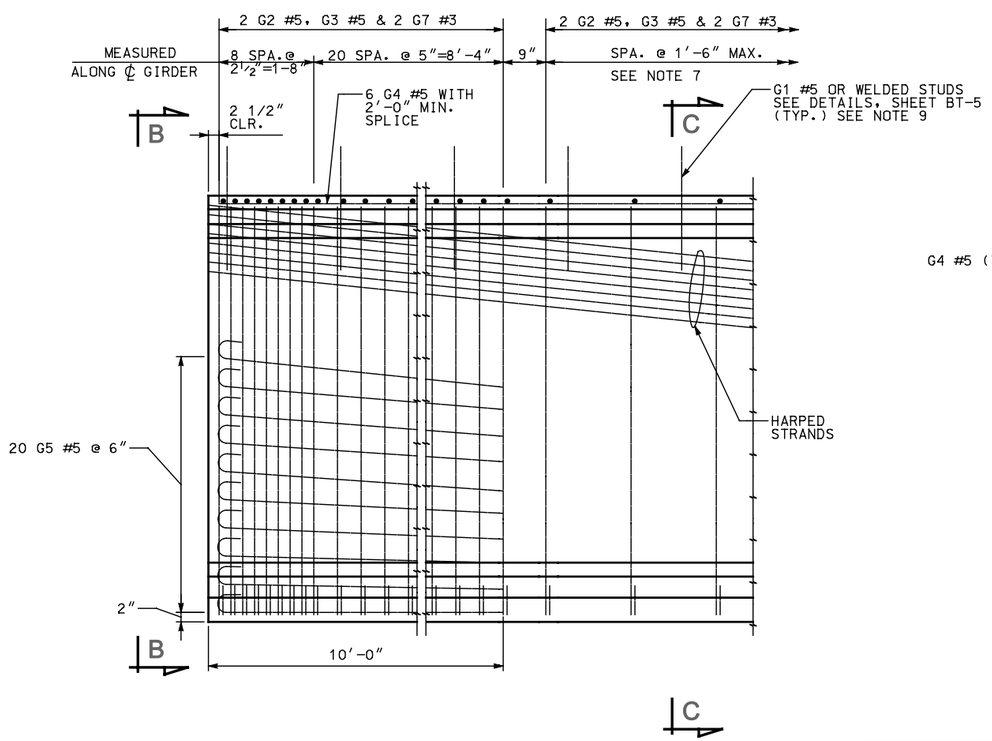

2 TYPICAL END ELEVATION

END TYPE A SHOWN, TYPE B SIMILAR

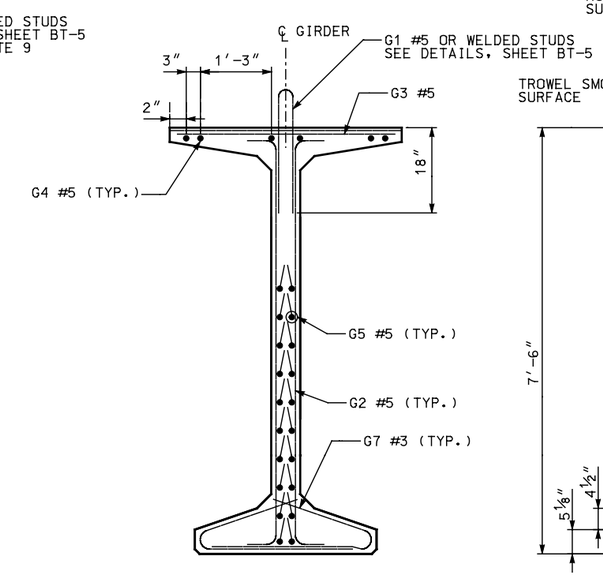

3 VIEW B

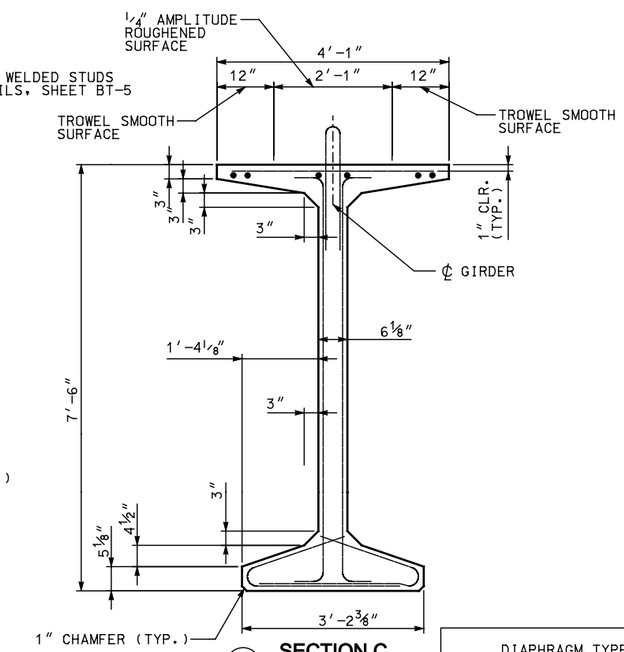

4 SECTION C

DIAPHRAGM TYPE	END TYPE
INTEGRAL ABUTMENT	A
CANTILEVER ABUTMENT	B

MARK	LOCATION	SIZE	
G1	SLAB STIRRUP	5	
G2	GIRDER STIRRUPS	5	
G3*	GIRDER TOP FLANGE	5	STR.
G4	GIRDER LONGIT. FULL LENGTH	5	STR.
G5	GIRDER LONGITUDINAL	5	
G7*	GIRDER BOT. FLANGE TIES	3	

BENDING DIAGRAM (ALL DIMENSIONS ARE OUT TO OUT)

NOTE: FOR DIMENSION "A", SEE "DECK OFFSETS"

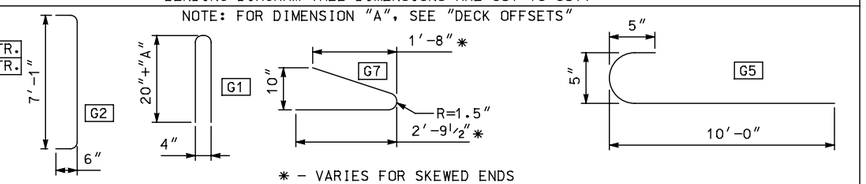

* - VARIES FOR SKEWED ENDS

REVISIONS

NO.	DATE	BY	REMARKS

UTAH DEPARTMENT OF TRANSPORTATION
SALT LAKE CITY, UTAH
STRUCTURES DIVISION

DESIGN CHECK
DRAWN CHECK
QUANT. CHECK

APPROVAL RECOMM. DATE SENIOR DESIGN ENGR.
APPROVED FOR ISSUE BY UDOT DATE UDOT BRIDGE ENGR.

TYPICAL DETAIL SHEET
PRETENSIONED BULB TEE GIRDER
UBT90 GIRDER DETAILS 1

PROJECT NUMBER

COUNTY

UBT90 - 1
DRG. NO.

SHT. OF

UBT90G1.dgn
4/30/2009

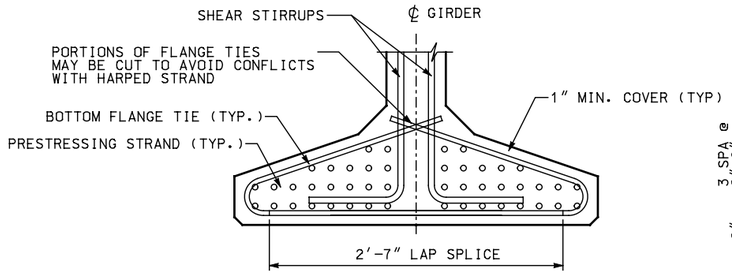

8 **BOTTOM FLANGE REINFORCING**

GIRDER END SHOWN, MIDDLE SECTION SIMILAR

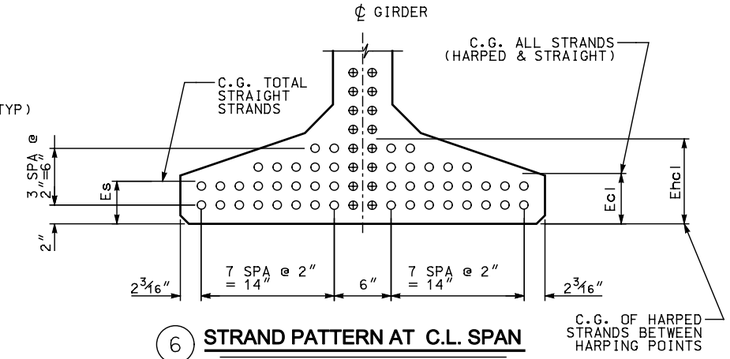

6 **STRAND PATTERN AT C.L. SPAN**

⊕ DENOTES HARPED STRAND

○ DENOTES STRAIGHT STRAND

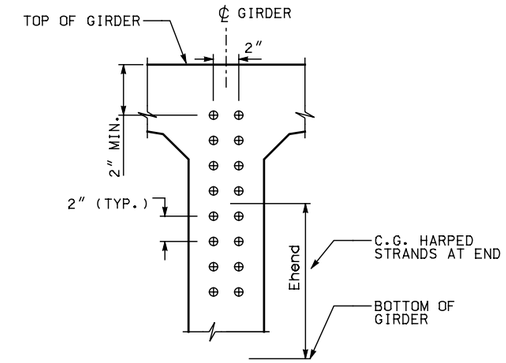

5 **STRAND PATTERN AT GIRDER END**

⊕ DENOTES HARPED STRAND

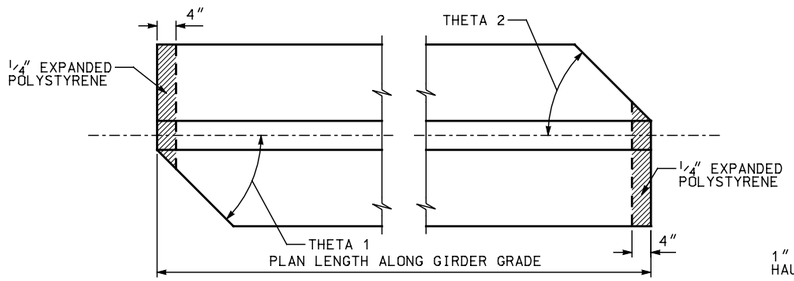

END 1 **PLAN** **END 2**

9 **SKEWED END DETAILS**

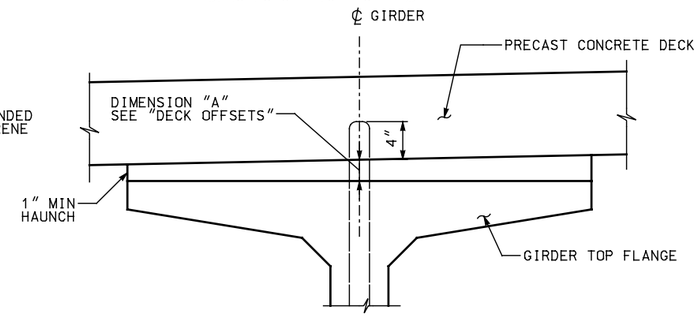

12 **DECK SECTION AT GIRDER ENDS**

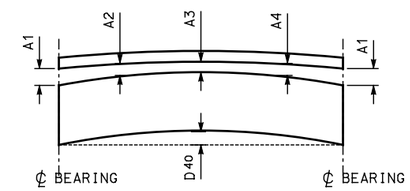

HAUNCH DIAGRAM

NOTE: "A" DIMENSIONS BASED ON GIRDER DEFLECTIONS EQUAL TO "D40" AT TIME OF SLAB PLACEMENT (40 DAYS)

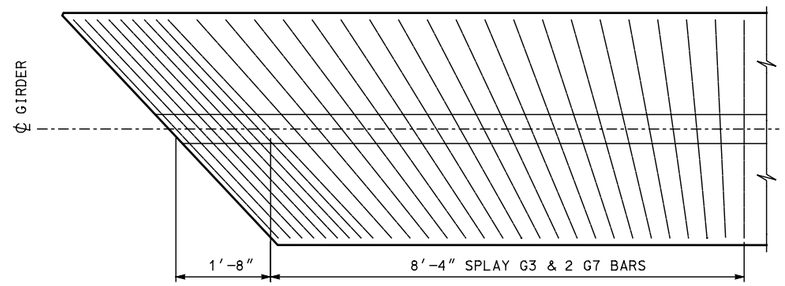

11 **TRANSVERSE REINFORCING SKEWED ENDS**

ONLY TRANSVERSE REINF. SHOWN

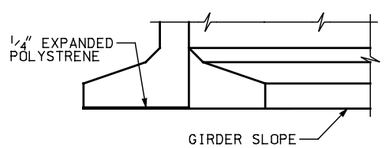

ELEVATION

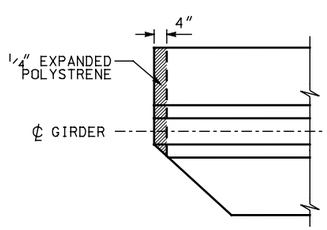

PLAN

10 **BOTTOM FLANGE SPALL PROTECTION DETAIL**

GIRDER SCHEDULE

SPAN	GIRDER	END TYPE	SHEAR CONN. TYPE W = WELDED STUD R = REINFORCING	(THETA) 1 (DEG.) ⑨	(THETA) 2 (DEG.) ⑨	PLAN LENGTH (ALONG GIRDER GRADE)	MIN. CONC. COMPR. STRENGTH F'CI KSI	MIN. CONC. COMPR. STRENGTH F'C KSI	HARPED NO. OF STRANDS	HARPED JACKING FORCE (KIPS)	STRAIGHT NO. OF STRANDS	STRAIGHT JACKING FORCE (KIPS)	LOCATION OF C.G. STRANDS Ecl ⑥	LOCATION OF C.G. STRANDS Es ⑥	LOCATION OF C.G. STRANDS Ehcl ⑥	LOCATION OF C.G. STRANDS Ehend ⑤	CAMBER D DR △	CAMBER D D40 △	CAMBER D DF △	DECK OFFSETS A1	DECK OFFSETS A2	DECK OFFSETS A3	DECK OFFSETS A4
-	-	-	-	-	-	-	-	-	-	-	-	-	-	-	-	-	-	-	-	-	-	-	-
-	-	-	-	-	-	-	-	-	-	-	-	-	-	-	-	-	-	-	-	-	-	-	-
-	-	-	-	-	-	-	-	-	-	-	-	-	-	-	-	-	-	-	-	-	-	-	-
-	-	-	-	-	-	-	-	-	-	-	-	-	-	-	-	-	-	-	-	-	-	-	-

NOTES: SHOW DIMENSIONS IN U.S. CUSTOMARY UNITS TO THE NEAREST 1/8 TH INCH.
THE NUMBER OF HARPED STRANDS SHOULD NOT EXCEED 1/2 OF NUMBER OF STRAIGHT STRANDS.

CAMBER NOTES: DR= CAMBER AT RELEASE
D40= CAMBER AT 40 DAYS (DECK CASTING)
DF= CAMBER INCLUDING ALL DL AT 120 DAYS

NO.	DATE	BY	REMARKS

REVISIONS

UTAH DEPARTMENT OF TRANSPORTATION
SALT LAKE CITY, UTAH
STRUCTURES DIVISION

DESIGN CHECK
DRAWN CHECK
QUANT. CHECK

APPROVAL RECOMM. DATE SENIOR DESIGN ENGR.
APPROVED FOR USE BY UDOT DATE UDOT BRIDGE ENGR.

TYPICAL DETAIL SHEET
PRETENSIONED BULB TEE GIRDER
UBT90 GIRDER DETAILS 2

PROJECT NUMBER

COUNTY

UBT90 - 2
DRG. NO.

SHT. OF

UBT90G2.dgn

4/30/2009

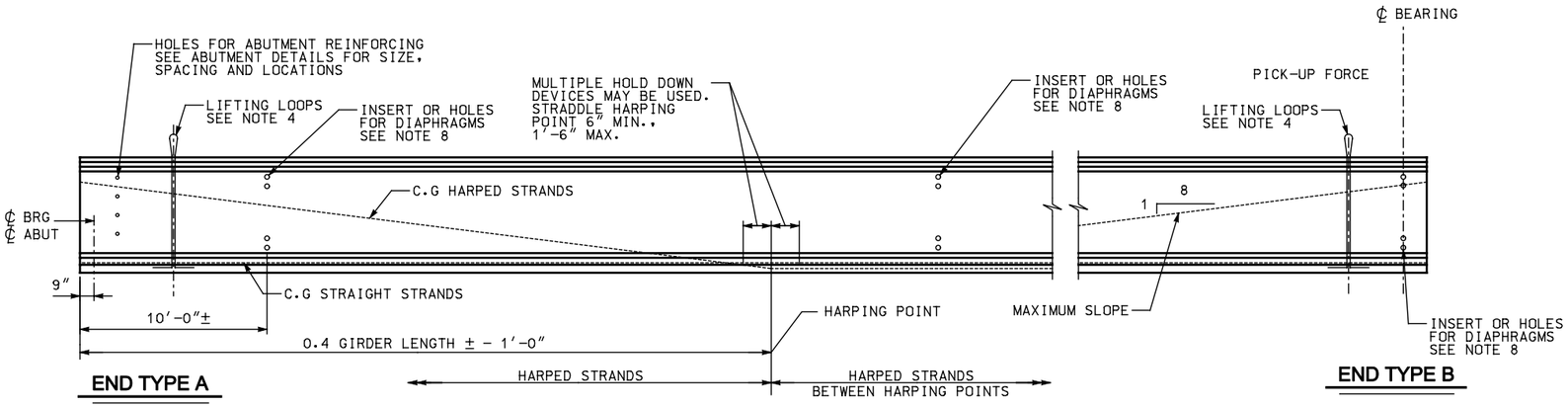

GIRDER ELEVATION

NOTES

1. INCREASE PLAN LENGTH AS NECESSARY TO COMPENSATE FOR SHORTENING DUE TO PRESTRESS AND SHRINKAGE.
2. ALL PRETENSIONED AND TEMPORARY STRANDS TO BE [0.6" DIA.] LOW RELAXATION STRANDS (AASHTO M203 GRADE 270.)
3. FOR GIRDER ENDS REQUIRING BAR OR STRAND EXTENSION SEE SUPPLEMENTAL DETAILS. FOR END TYPE 'B', CUT ALL STRANDS BELOW CONCRETE SURFACE AND GROUT WITH AN APPROVED EPOXY GROUT.
4. CONTRACTOR TO DESIGN AND INSTALL LIFTING EMBEDMENTS IN ACCORDANCE WITH THE STANDARD SPECIFICATIONS.
5. CAUTION TO BE EXERCISED IN HANDLING AND PLACING GIRDERS. ALL GIRDERS TO BE CHECKED BY THE CONTRACTOR TO ENSURE THAT THEY ARE BRACED ADEQUATELY TO PREVENT TIPPING AND TO CONTROL LATERAL BENDING DURING SHIPPING. ONCE ERECTED, ALL GIRDERS TO BE BRACED LATERALLY TO PREVENT TIPPING UNTIL THE DIAPHRAGMS HAVE BEEN INSTALLED.
6. FOR DIAPHRAGM NOTES SEE SHEET BT-4.
7. DESIGN GIRDER STIRRUP SPACING IN THIS REGION.
8. SEE FRAMING PLAN FOR DIAPHRAGM LOCATIONS AND SEE DIAPHRAGM DETAILS FOR CONNECTION REQUIREMENTS.
9. DESIGN SLAB STIRRUPS BASED ON DECK AND SHEAR CONNECTOR SELECTED.

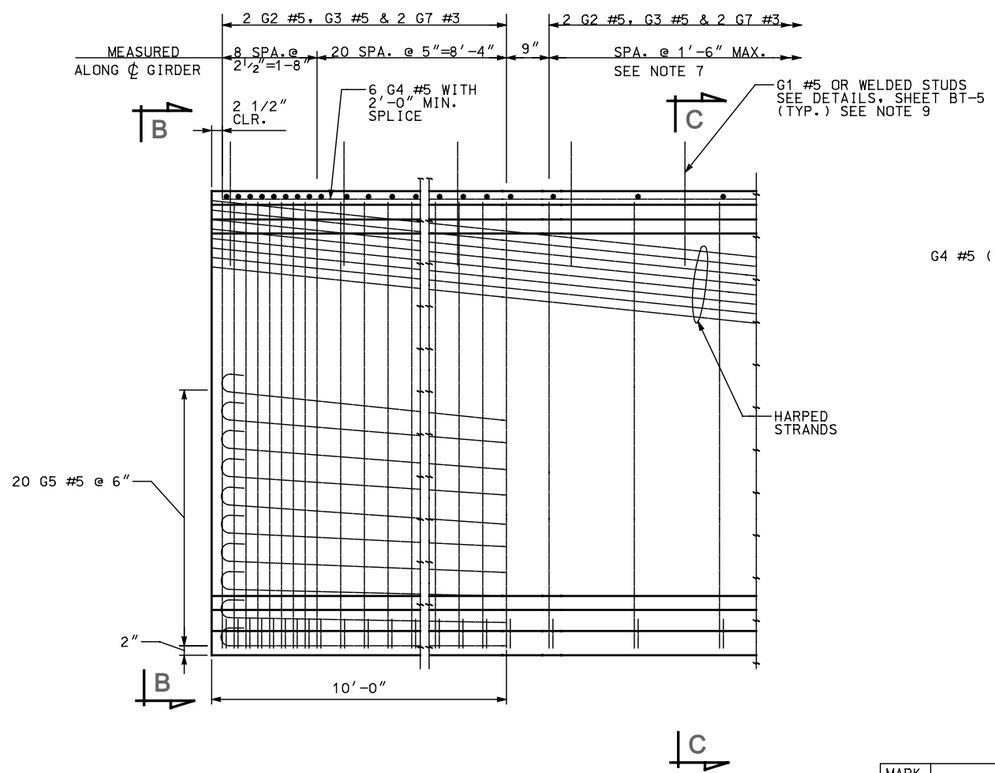

2 **TYPICAL END ELEVATION**

END TYPE A SHOWN, TYPE B SIMILAR

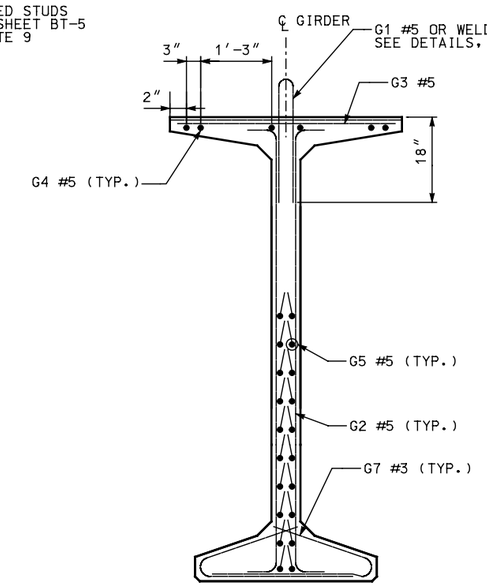

3 **VIEW B**

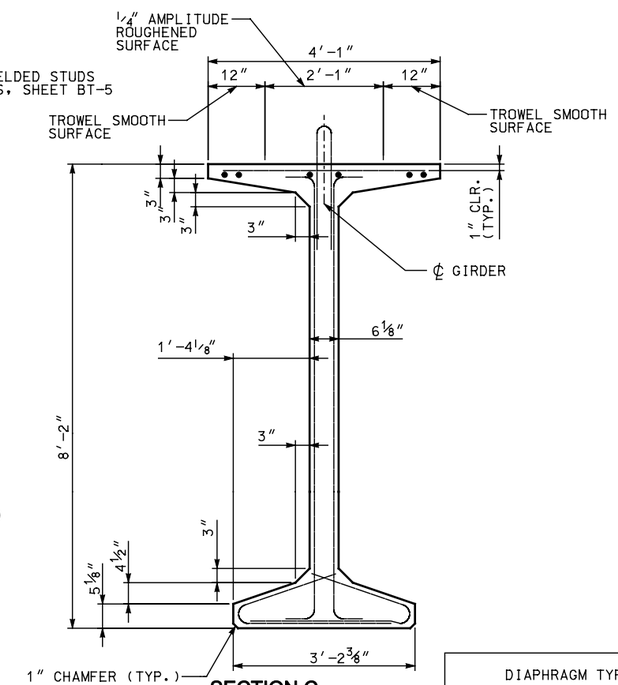

4 **SECTION C**

DIAPHRAGM TYPE	END TYPE
INTEGRAL ABUTMENT	A
CANTILEVER ABUTMENT	B

MARK	LOCATION	SIZE	BENDING DIAGRAM (ALL DIMENSIONS ARE OUT TO OUT) NOTE: FOR DIMENSION "A", SEE "DECK OFFSETS"
G1	SLAB STIRRUP	5	
G2	GIRDER STIRRUPS	5	
G3*	GIRDER TOP FLANGE	5 STR.	
G4	GIRDER LONGIT. FULL LENGTH	5 STR.	
G5	GIRDER LONGITUDINAL	5	
G7*	GIRDER BOT. FLANGE TIES	3	

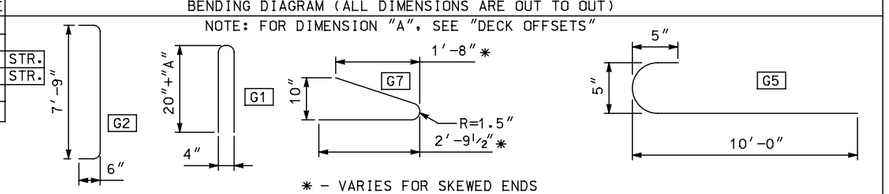

* - VARIES FOR SKEWED ENDS

NO.	DATE	BY	REMARKS

REVISIONS

UTAH DEPARTMENT OF TRANSPORTATION
SALT LAKE CITY, UTAH
STRUCTURES DIVISION

CHECK
DESIGN
CHECK
DRAWN
CHECK
QUANT.

APPROVAL RECOMM. DATE SENIOR DESIGN ENGR.
APPROVED FOR USE BY UDOT DATE UDOT BRIDGE ENGR.

TYPICAL DETAIL SHEET
PRETENSIONED BULB TEE GIRDER
UBT98 GIRDER DETAILS 1

PROJECT NUMBER

COUNTY

UBT98 - 1
DRG. NO.

SHT. OF

UBT9851.dgn
4/30/2009

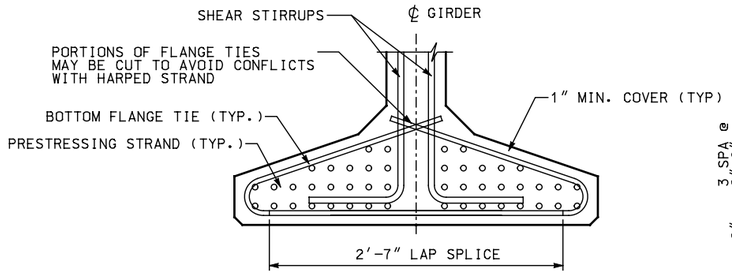

8 **BOTTOM FLANGE REINFORCING**

GIRDER END SHOWN, MIDDLE SECTION SIMILAR

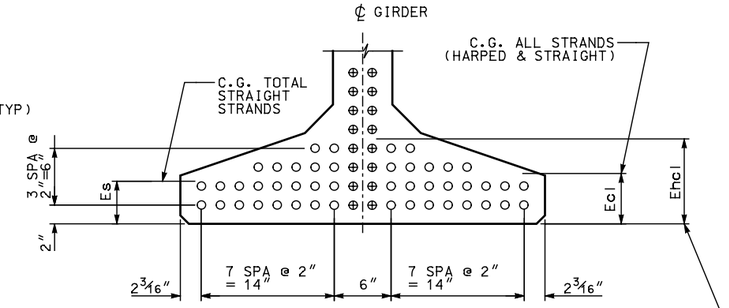

6 **STRAND PATTERN AT C.L. SPAN**

⊕ DENOTES HARPED STRAND

○ DENOTES STRAIGHT STRAND

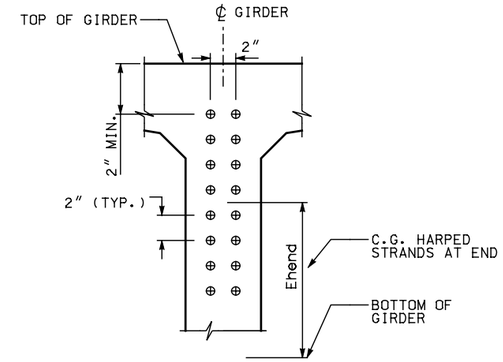

5 **STRAND PATTERN AT GIRDER END**

⊕ DENOTES HARPED STRAND

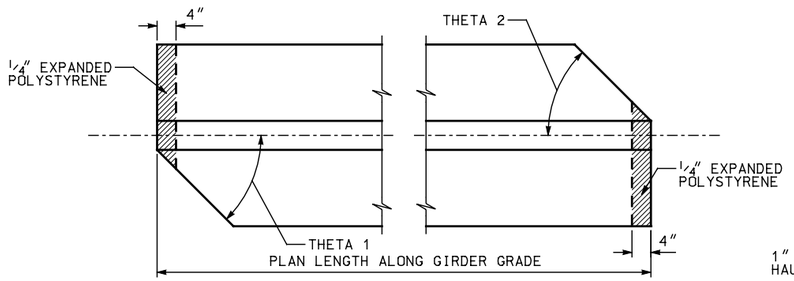

9 **SKEWED END DETAILS**

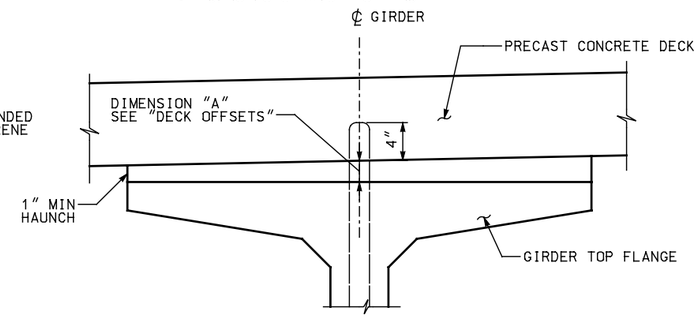

12 **DECK SECTION AT GIRDER ENDS**

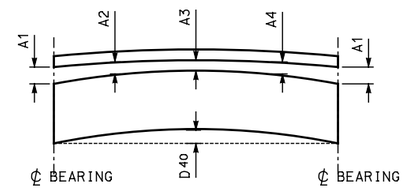

HAUNCH DIAGRAM

NOTE: "A" DIMENSIONS BASED ON GIRDER DEFLECTIONS EQUAL TO "D40" AT TIME OF SLAB PLACEMENT (40 DAYS)

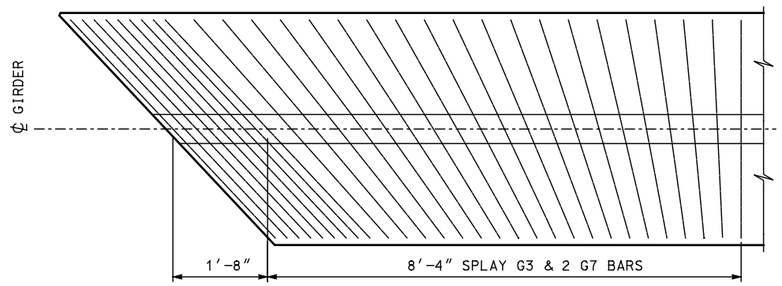

11 **TRANSVERSE REINFORCING SKEWED ENDS**

ONLY TRANSVERSE REINF. SHOWN

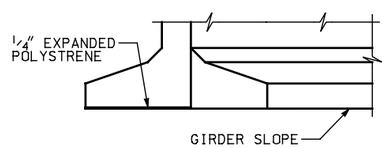

ELEVATION

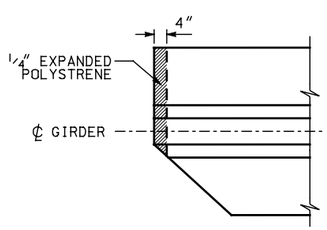

PLAN

10 **BOTTOM FLANGE SPALL PROTECTION DETAIL**

GIRDER SCHEDULE

SPAN	GIRDER	END TYPE	SHEAR CONN. TYPE W = WELDED STUD R = REINFORCING	(THETA) 1 (DEG.) ⑨	(THETA) 2 (DEG.) ⑨	PLAN LENGTH (ALONG GIRDER GRADE)	MIN. CONC. COMPR. STRENGTH F'CI KSI	MIN. CONC. COMPR. STRENGTH F'C KSI	HARPED NO. OF STRANDS	HARPED JACKING FORCE (KIPS)	STRAIGHT NO. OF STRANDS	STRAIGHT JACKING FORCE (KIPS)	LOCATION OF C.G. STRANDS Ecl ⑥	LOCATION OF C.G. STRANDS Es ⑥	LOCATION OF C.G. STRANDS Ehcl ⑥	LOCATION OF C.G. STRANDS Ehend ⑤	CAMBER D DR △	CAMBER D D40 △	CAMBER D DF △	DECK OFFSETS A1	DECK OFFSETS A2	DECK OFFSETS A3	DECK OFFSETS A4
-	-	-	-	-	-	-	-	-	-	-	-	-	-	-	-	-	-	-	-	-	-	-	-
-	-	-	-	-	-	-	-	-	-	-	-	-	-	-	-	-	-	-	-	-	-	-	-
-	-	-	-	-	-	-	-	-	-	-	-	-	-	-	-	-	-	-	-	-	-	-	-
-	-	-	-	-	-	-	-	-	-	-	-	-	-	-	-	-	-	-	-	-	-	-	-

NOTES: SHOW DIMENSIONS IN U.S. CUSTOMARY UNITS TO THE NEAREST 1/8 TH INCH.
THE NUMBER OF HARPED STRANDS SHOULD NOT EXCEED 1/2 OF NUMBER OF STRAIGHT STRANDS.

CAMBER NOTES: DR= CAMBER AT RELEASE
D40= CAMBER AT 40 DAYS (DECK CASTING)
DF= CAMBER INCLUDING ALL DL AT 120 DAYS

NO.	DATE	BY	REMARKS

REVISIONS

UTAH DEPARTMENT OF TRANSPORTATION
SALT LAKE CITY, UTAH
STRUCTURES DIVISION

DESIGN CHECK
DRAWN CHECK
QUANT. CHECK

APPROVAL RECOMM. DATE SENIOR DESIGN ENGR.
APPROVED FOR USE BY UDOT DATE UDOT BRIDGE ENGR.

TYPICAL DETAIL SHEET
PRETENSIONED BULB TEE GIRDER
UBT98 GIRDER DETAILS 2

PROJECT NUMBER

COUNTY

UBT98 - 2
DRG. NO.

SHT. OF

UBT98C2.dgn
4/30/2009